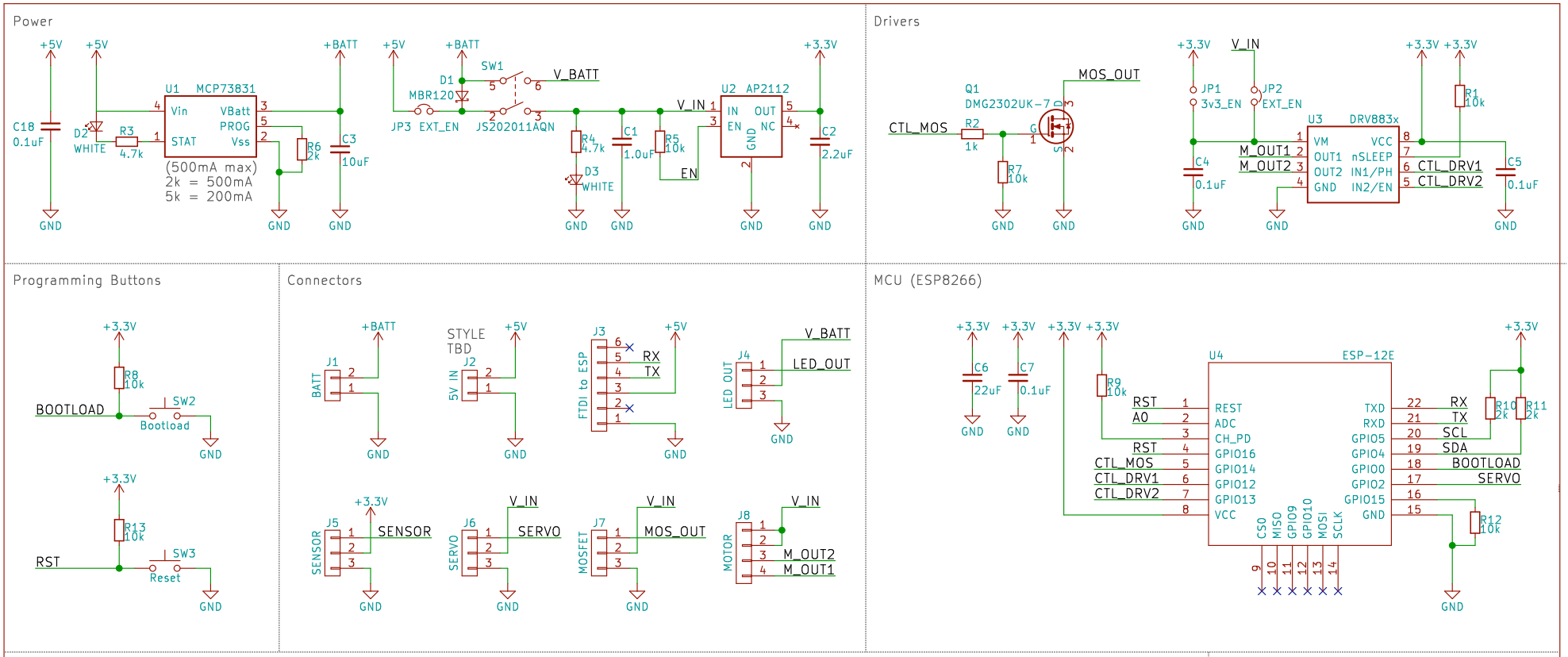

Notes:

- aIn = AnalogRead(A0)/1023; vBatt =4.2*aIn;
- Must add logic level shift to LED_IN in order to power LED from V_IN
- Prob. just 10-22uF bulk cap. instead of 100uF
- 2n7002 200-500mA; DMG2302UK-7 2.8A
- ALT charge: MCP73833/4 (1.1A max)
- 3.3v FTDI output cannot power board

Project:	Client:	Sheet:	Title:	Rev:	Size:	Drawn By:	Date:
SPORE	Lightwork	1/1	SPORE PCB	0.0.3	USLetter	BBM	2018-03-06

Tangible Interaction Design Inc.
#304 - 1000 Parker St
Vancouver, BC V6A 2H2
(604) 484-5524

f:Spore_proto.sch
sp:/
v:KICad E.D.A. kicad 4.0.6