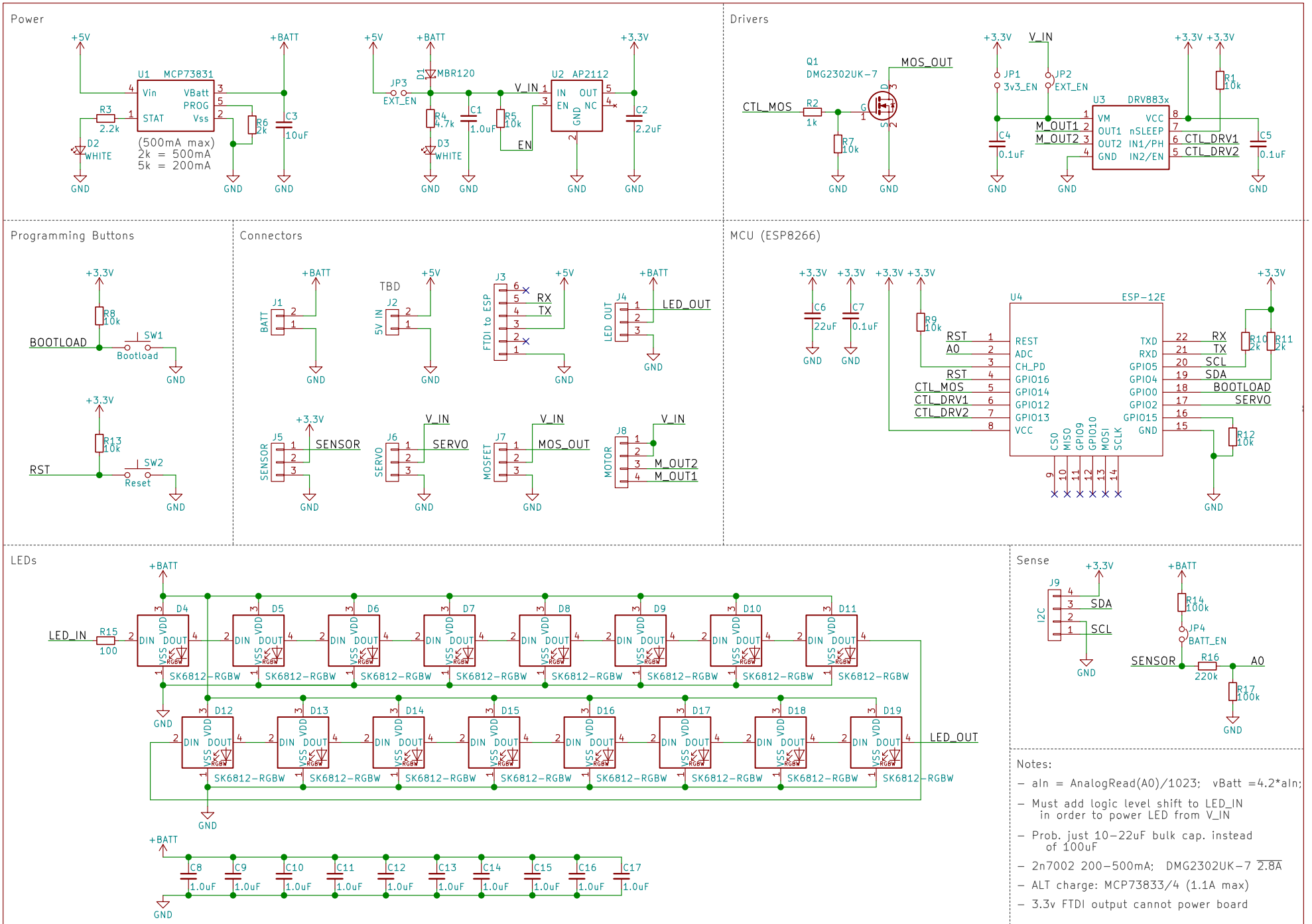
Power
U1 MCP73831
Vin VBatt PROG STAT Vss
R3 2.2k
D2 WHITE
R6 2k
C3 10uF
(500mA max)
2k = 500mA
5k = 200mA
JP3 EXT_EN
D1 MBR120
R4 4.7k
D3 WHITE
C1 1.0uF
R5 10k
U2 AP2112
IN OUT EN NC GND
C2 2.2uF
Drivers
Q1 DMG2302UK-7
MOS_OUT
CTL_MOS
R2 1k
R7 10k
JP1 3v3_EN
JP2 EXT_EN
U3 DRV883x
VM VCC OUT1 nSLEEP OUT2 IN1/PH GND IN2/EN
M_OUT1
M_OUT2
CTL_DRV1
CTL_DRV2
R1 10k
C4 0.1uF
C5 0.1uF
Programming Buttons
R8 10k
BOOTLOAD
SW1 Bootload
R13 10k
RST
SW2 Reset
Connectors
J1 BATT
J2 TBD 5V IN
J3 FTDI to ESP
RX
TX
J4 LED OUT
LED_OUT
J5 SENSOR
J6 SERVO
J7 MOSFET
MOS_OUT
J8 MOTOR
M_OUT2
M_OUT1
MCU (ESP8266)
C6 22uF
C7 0.1uF
R9 10k
U4 ESP-12E
REST ADC CH_PD GPIO16 GPIO14 GPIO12 GPIO13 VCC
TXD RXD GPIO5 GPIO4 GPIO0 GPIO2 GPIO15 GND
CS0 MISO GPIO9 GPIO10 MOSI SCLK
R10 2k
R11 2k
R12 10k
LEDs
LED_IN
R15 100
D4 D5 D6 D7 D8 D9 D10 D11 D12 D13 D14 D15 D16 D17 D18 D19
DIN DOUT VDD VSS
SK6812-RGBW
LED_OUT
C8 C9 C10 C11 C12 C13 C14 C15 C16 C17
1.0uF
Sense
J9 I2C
SDA
SCL
R14 100k
JP4 BATT_EN
SENSOR
R16 220k
A0
R17 100k
Notes:
- aIn = AnalogRead(A0)/1023; vBatt =4.2*aIn;
- Must add logic level shift to LED_IN in order to power LED from V_IN
- Prob. just 10-22uF bulk cap. instead of 100uF
- 2n7002 200-500mA; DMG2302UK-7 2.8A
- ALT charge: MCP73833/4 (1.1A max)
- 3.3v FTDI output cannot power board
Project: SPORE
Client: Lightwork
Sheet: 1/1
Title: SPORE PCB
Rev: 0.0.1
Size: USLetter
Drawn By: BBM
Date: 2018-03-06
Tangible Interaction Design Inc.
#304 - 1000 Parker St
Vancouver, BC V6A 2H2
(604) 484-5524
fzSpore_proto.sch
vzKICad E.D.A. kicad 4.0.6