How many selection lines are required in 16x1 MUX?

- ○ a) 1
- ○ b) 2
- ○ c) 3
- ◉ d) 4

Scanned with CamScanner

If a register containing data (11001100) is subjected to arithmetic shift right operation, then the content of the register after the operation

- a) (11001100)
- b) (10011001)
- c) (11100110)
- d) (10011000)

Moving to the next question prevents changes to this answer.

Question

Scanned with CamScanner

How to get D Flip-Flop from JK Flip Flop.

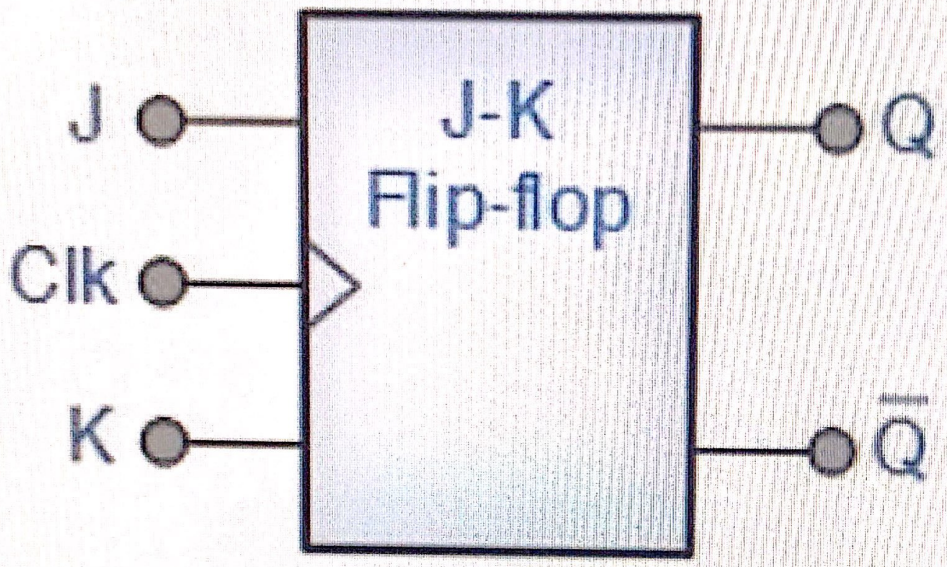

- a) Direct connection between J and K
- b) Connection between J and K with NOT gate
- c) connection between J and K with AND gate
- d) Connection between J and K with OR gate

Scanned with CamScanner

How many full adder is required to make 5 bits parallel adder:

- a) 10
- b) 3
- c) 5
- d) 6

Moving to the next question prevents changes to this answer.

Scanned with CamScanner

A digital computer has a common bus system for 64 registers of 16 bits each. The bus is constructed with multiplexers. The number of multiplexers are there in the bus is

- a) 64
- b) 16
- c) 32
- d) 8

Moving to the next question prevents changes to this answer.

Scanned with CamScanner

In 4 bits Adder, Total number of inputs

- ○ a) 4
- ○ b) 8
- ◉ c) 9
- ○ d) 10

Scanned with CamScanner

For Following Circuit Value of S1S0 to transfer data from Register C to bus

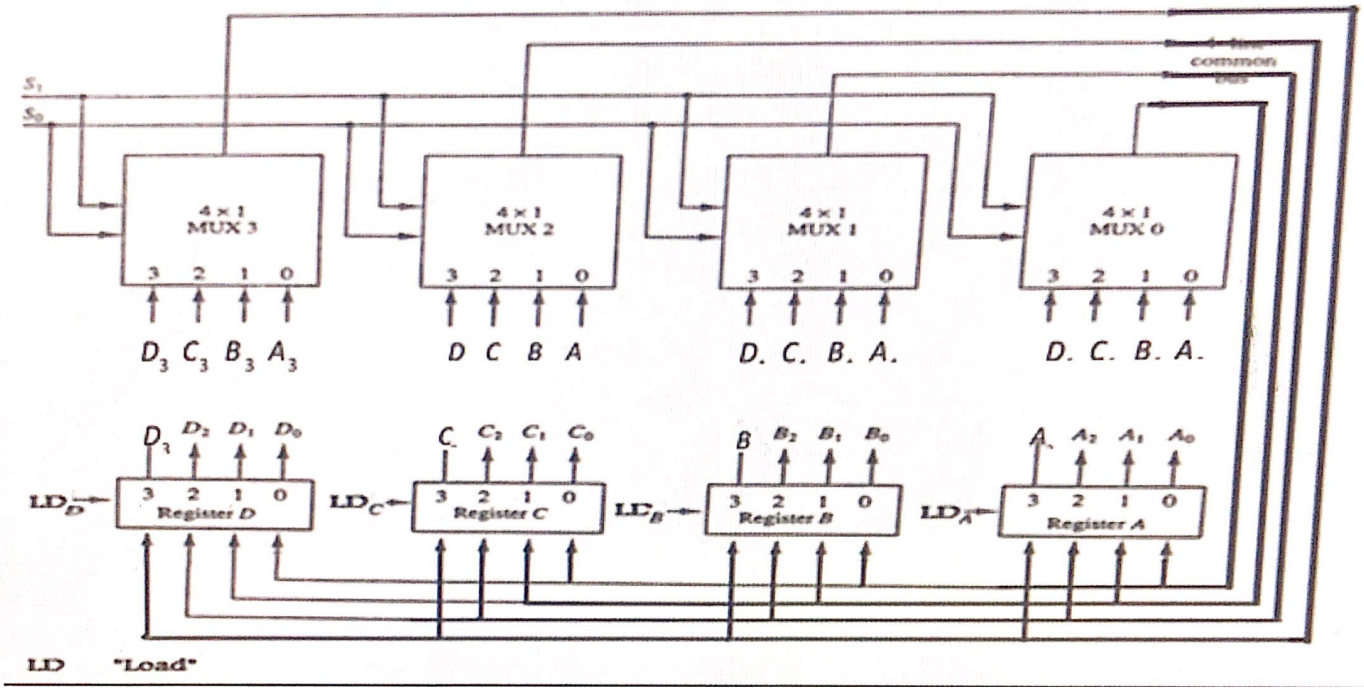

Scanned with CamScanner

which one works same

- [x] a) Logical shift Left and Arithmetic Shift Left
- [ ] b) Logical shift Right and Arithmetic Shift Right
- [ ] c) Logical shift Left and Circular Shift Left
- [ ] d) Logical Shift Right and Circular Shift Right

⚠ Moving to the next question prevents changes to this answer

Scanned with CamScanner

For constructing 4 to 16 decoder, How many 2 to 4 decoder is required

- a) 2
- b) 4
- c) 5
- d) 3

Moving to the next question prevents changes to this answer.

Scanned with CamScanner

Decoder some times called

- (●) a) minterm generators
- ( ) b) maxterm generator
- ( ) c) 4x 1 multiplexer
- ( ) d) None

Scanned with CamScanner

Question 4

A Half adder is ----------?

- a) 3 bitts addition
- b) 1 Full adder
- c) 2 bit addition
- d)Sequential Circuit

Scanned with CamScanner

How to get A-B in computer

- ○ a) A – (-B)
- ◉ b) A + 1's complement of B + 1
- ○ b) A + 1's Complement of B
- ○ c) A – 2's Complement of B

⚠ Moving to the next question prevents changes to this ans

Scanned with CamScanner

For 8 X 1 multiplexer, Nor of selection input is----------

- a) 2
- b) 4
- c) 1
- d) 3

Scanned with CamScanner

If A = 00000110 and B= 11111110 in 2's complement 8 bits number, A-B equivalent Decimal number is

- a) 6
- b) 44
- c) -10
- d) 8

Scanned with CamScanner

For Following Circuit if Load is zero what is value of Memory?

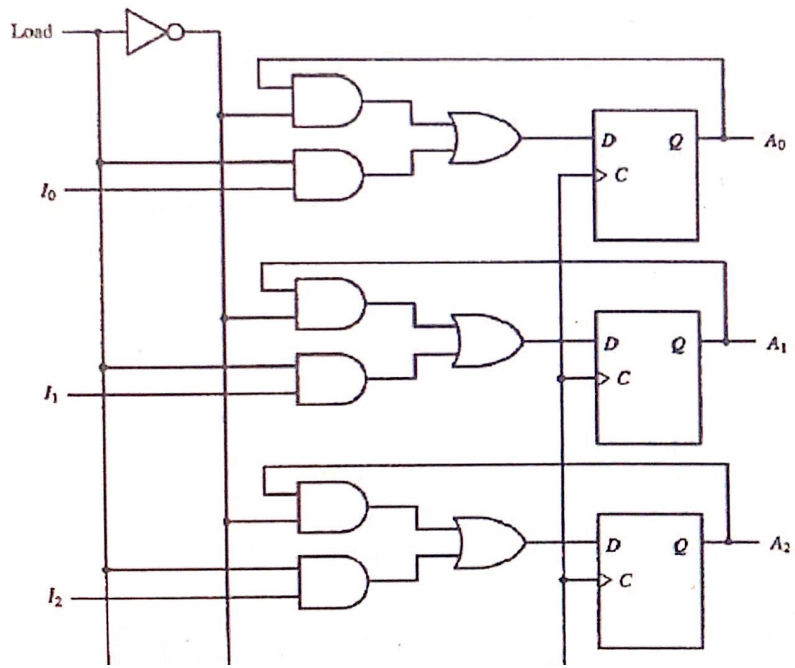

Scanned with CamScanner

The content of a 4-bit register is initially 1101. The register is shifted 2 times to the right with the serial input being 1011101. What is the content of the register after each shift?

- (●) a) 1110, 0111
- ( ) b) 0001, 1000
- ( ) c) 1101, 1011
- ( ) d)1001, 1001

Scanned with CamScanner

1 X 4 DeMUX is equivalent to

- [x] a) 4x1 Mux
- [ ] b) 2 to 4 Decoder
- [ ] c) 2 to 4 Decoder with enable
- [ ] d) Two 2x1 Mux

Scanned with CamScanner

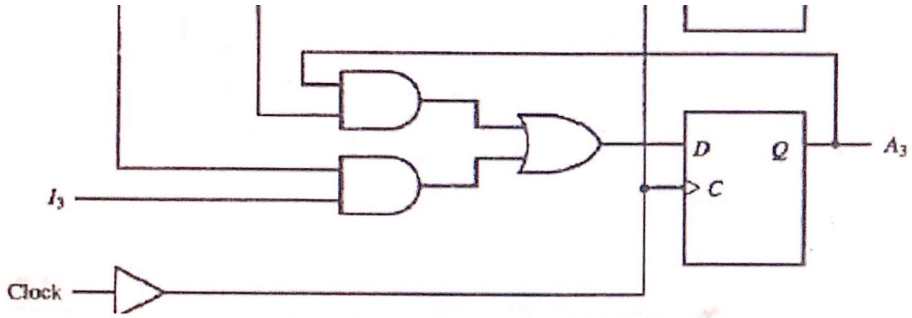

- a) Memory Does not change means A0,A1,A2,A3
- b) Memory accepts new value I0,I1,I2,I3
- c) Memory keeps 0
- d) Memory keeps 1

Scanned with CamScanner

Question 7

1 X 4 DeMUX is equivalent to

- ○ a) 4x1 Mux
- ○ b) 2 to 4 Decoder
- ◉ c) 2 to 4 Decoder with enable
- ○ d) Two 2x1 Mux

Scanned with CamScanner

Q13: How many 128 x 8 RAM chips are needed to provide a memory capacity of 2048 bytes?

- ○ a) 8
- ◉ b) 16
- ○ c) 24
- ○ d) 32

Scanned with CamScanner

Question 2

The 8-bit binary number 1111 1111 represents

- ○ a) 255
- ○ b) -255
- ○ c) -127
- ◉ d) -1

Scanned with CamScanner

which is a read instruction from memory:

- ○ a) R1 <--- MAR
- ○ b) R1 <--- MDR
- ◉ c) R1 <--- M[MAR]
- ○ d) M[R1] <--- R1

Scanned with CamScanner

A combinational circuit that adds 3 input bits to generate a Sum bit and a Carry bit is

- a) 3 bits Adder
- b) 6 Half Adder
- c) Full Adder
- d) 3 Full Adder

⚠ Moving to the next question prevents changes to this answer.

Scanned with CamScanner

The equivalent hexadecimal number for the binary number 0101001 is:

- ○ a) 52
- ◉ b) 29
- ○ c) 49
- ○ d) 51

Scanned with CamScanner

A 20-bit address bus allows access to a memory of capacity (assuming 1 Byte /word)

- (●) a) 1 MB
- ( ) b) 2 MB
- ( ) c) 32MB
- ( ) d) 64 MB

⚠ Moving to the next question prevents changes to this answer.

Scanned with CamScanner

Question 8

A Kb corresponds to

- (●) a) 1024 bits
- ( ) b) 1000 bytes
- ( ) c) 2 bytes
- ( ) d) 2 bits

⚠️ Moving to the next question prevents

Scanned with CamScanner