جزئية الكويز من تشابتر 6 إلى تشابتر 9

Moving to another question will save this response.

Question 1

0.5 points Saved

Suppose 8-bit registers R1 = 0101 0110, R2 = 0100 0010, where 2's complement signed number system is used. What will be the content of R3 after the following micro-operation:

$R3 \leftarrow R1 \vee R2$

- (selected) 0101 0110
- 0101 0101
- 0100 0010
- 0100 0001

Moving to another question will save this response.

Question 1 of 20

Moving to another question will save this response.

Question 2 of 20

Question 2

0.5 points Saved

For a 256X128 bit Random Access Memory.

How many bit in each word? (Write the number only)

128

Moving to another question will save this response.

Question 2 of 20

Moving to another question will save this response.

Question 6 of 20

Question 6

0.5 points Saved

Suppose an 8-bit register R1 =1001 1111, What will be the content of the register after the <u>rotate right</u> operation:

- 0011 1111
- 1100 1111
- 0100 1111
- 0011 1110

Moving to another question will save this response.

Question 6 of 20

Moving to another question will save this response.

Question 3

0.5 points Saved

Which one of the following statements is invalid about the direct inputs PS' and PR'?

- (●) PS' and PR' are dependent of clock input.
- ( ) PS' presets the output to 1.
- ( ) PR' clears the output to 0.
- ( ) Both PS' and PR' cannot be low at the same time.

Moving to another question will save this response.

Question 3 of 20

Moving to another question will save this response.

Question 10

0.5 points Saved

How can the SR flip flop be modified to operate as D flip flop?

- ○ S=D, R=D
- ○ S=D', R=D
- ◉ S=D, R=D'
- ○ S=D', R=D'

Moving to another question will save this response.

« ‹ Question 10 of 20 › »

⚠ Moving to another question will save this response.

Question 9

0.5 points Saved

How many 128 x 8 bit RAM chips are needed to provide a memory capacity of 1024 bytes?

- (selected) 8
- 16
- 24
- 32

⚠ Moving to another question will save this response.

Question 9 of 20

Moving to another question will save this response.

Question 8 of 20

Question 8

0.5 points Saved

Synchronous: all flip-flops receive the same clock pulse

- False
- True

Moving to another question will save this response.

Question 8 of 20

Question 7

0.5 points Saved

What is the cycle that is performed by the following counter

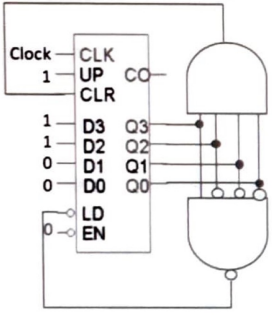

- ○ **14, 13,12,9,8,7,6,5,4,3,2,1,0, 14, 13 ……**
- ○ **12, 13, 14, 15, 0, 1, 2, 3, 4, 5, 6, 7, 8, 9, 12, 13,…..**
- ○ **0, 1, 2, 3, 4, 5, 6, 7, 8, 9,13,14, 0, 1,……**
- ◉ **0, 1, 2, 3, 4, 5, 6, 7, 8, 12,13,14, 0, 1,……**

⚠ Moving to another question will save this response.

Moving to another question will save this response.

Question 4

0.5 points Saved

Determine the output frequency for a frequency division circuit that contains 4 flip flops with an input clock frequency of 48 Hz.

- 2
- 3
- 4
- 5

Moving to another question will save this response.

Question 4 of 20

Moving to another question will save this response.

Question 13

0.5 points Saved

To design 16-bits register that performs shift left and set, we need

- (●) 16 Muxs and 16 D FlipFlops
- ( ) 2 Muxs and 2 D FlipFlops
- ( ) 2 Muxs and 16 D FlipFlops
- ( ) 16 Muxs and 2 D FlipFlops

Moving to another question will save this response.

Question 13 of 20

Question 12

0.5 points Saved

$M[R2] \leftarrow R1$

This RTL statement will store the value of R1 in the memory

- (●) True
- ( ) False

⚠ Moving to another question will save this response.

Question 11

0.5 points Saved

If a Switch-tail ring counter register containing (1001 1111) is subject to a right shift, then the content of the register after one clock pulse is:

- (selected) 0100 1111
- 1100 1111
- 0011 1110
- 0011 1111

Moving to another question will save this response.

Moving to another question will save this response.

Question 5 of 20

Question 5

0.5 points Saved

For a 128X256 bit Random Access Memory.

How many address lines in this RAM? (Write the number only)

7

Moving to another question will save this response.

Question 5 of 20

The _____is an edge-triggered device that either toggle the memory value or remain the same depending on whether the input is 1 or 0.

- ○ SR flip flop
- ◉ T flip flop
- ○ JK flip flop
- ○ D flip flop

⚠ Moving to another question will save this response.

In sequential circuits, the output depends not only on the present values of the input but also the current state of memory.

- True
- False

$M[R1] \leftarrow R2$

This RTL statement will store the value of R1 in the memory

- ○ True
- ◉ False

When designing a 16x1 RAM using 2x8 RAM cell array

What are the decoders that we are going to use?

- (3x8 Dec) and (1x2 Dec)
- (2x4 Dec) and (2x4 Dec)
- (4x16 Dec)
- None of the above

⚠ Moving to another question will save this response.

To design 8-bits register that performs parallel load, shift right, memory and circular shift left, we need

- (●) 8 Muxs and 8 D FlipFlops
- ( ) 4 Muxs and 4 D FlipFlops
- ( ) 4 Muxs and 8 D FlipFlops
- ( ) 8 Muxs and 4 D FlipFlops

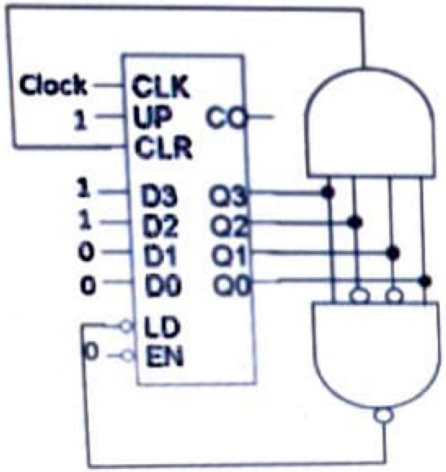

- 0, 1, 2, 3, 4, 5, 6, 7, 8, 9,12,13,14, 0, 1,……
- 14, 13,12,9,8,7,6,5,4,3,2,1,0, 14, 13 …….
- 12, 13, 14, 15, 0, 1, 2, 3, 4, 5, 6, 7, 8, 9, 12, 13,……
- 0, 1, 2, 3, 4, 5, 6, 7, 8,12,13,14, 0, 1,……

Question 19

0.5 points Saved

MOD 20 asynchronies counter will have at least ___

- 3 flip flops
- 4 flip flops
- 5 flip flops
- 6 flip flops

⚠ Moving to another question will save this response.

Question 18

0.5 points Saved

The suitable size of multiplexer to design 4-bits register that performs shift left and set, we need

- (selected) 2 *1
- 4 *1
- 1 *2
- 1*4

Moving to another question will save this response.

Question 17

0.5 points Saved

The _____ is an edge-triggered device that transfers input data to Q on clock rising edge.

- T flip flop
- SR flip flop
- D flip flop
- JK flip flop

Moving to another question will save this response.

Moving to another question will save this response.

Question 16

0.5 points Saved

Suppose 8-bit registers R1 = 0101 0110, R2 = 0100 0010, where 2's complement signed number system is used. What will be the content of R3 after the following micro-operation:

$R3 \leftarrow R2 - 1$

- 0101 0110
- 0101 0101
- 0100 0010
- 0100 0001

Moving to another question will save this response.

Question 16 of 20

Question 15

0.5 points Saved

Describe the following circuit

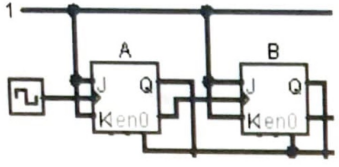

- Synchronies, up counter
- Synchronies, down counter
- Asynchronies, down counter
- Asynchronies, up counter

Moving to another question will save this response.

Question 14

0.5 points Saved

In sequential circuits, the output depends only on the present values of the input.

- True
- False

Moving to another question will save this response.

Question 14 of 20

Moving to another question will save this response.

Question 2

Which one of the following statements is TRUE about the SR flip flop?

- When S = R = 0, then output is 0
- When S = 0, R = 1, then output is 1
- When S = 1, R = 0, then output is unchanged.
- When S = 1, R = 1, then output is invalid condition.

Moving to another question will save this response.