PaN-Finder

Max Novelli and the SIMS team (DMSC - ESS)

ESRF, Grenoble, 2026-01-22

The idea

I'm writing a new proposal for a new experiment to study the changes in molecular structure of a new synthetic carbon based material bonding with human blood red cells. I'm interested in running the experiments at a normal human body temperature. Can you show me related publications and similar proposals? Have similar experiments already been conducted?

In-vivo experiments with synthetic carbon based materials has been already performed and you can find information about them in the following resources:

- Resource 1 (URL 1)
- Resource 2 (URL 2)

I have not found information regarding new synthetic carbon based materials bonding with human blood red cells, but relevant information might be found in the following resources:

- Resource 3 (URL 3)
- Resource 4 (URL 4)

You also might want to check the following open datasets as they have been acquired from human blood red cells at normal body temperature:

- Dataset 1, RI, DOI
- Dataset 2, RI, DOI
- Dataset 3, RI, DOI

Main Components

PaN-Finder Main components

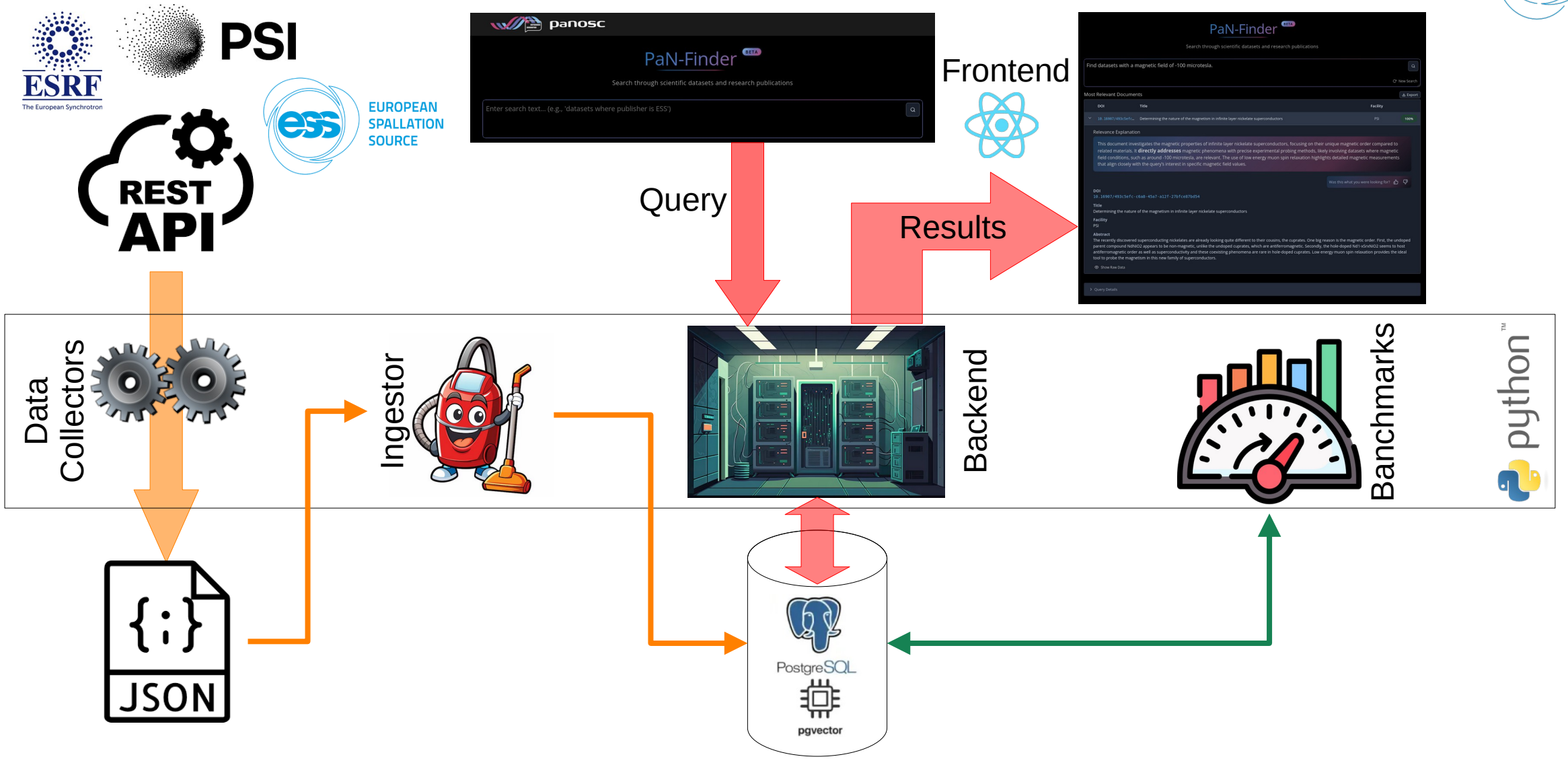

Data Collectors

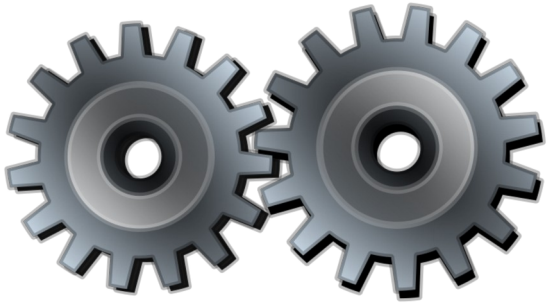

Data Collection: Main script

Local Panosc Search API https://icatplus.esrf.fr/api/Documents	List of all public documents	`panosc`
For each document: **API Datacite** https://icatplus.esrf.fr/doi/<DOI>/json-datacite	Datacite record	`datacite`
API Investigation https://icatplus.esrf.fr/catalogue/<SESSION_TOKEN>/investigation	Investigation details	`document`
API Dataset https://icatplus.esrf.fr/catalogue/<SESSION_TOKEN>/dataset	Datasets list and details	`datasets`
API Samples https://icatplus.esrf.fr/catalogue/<SESSION_TOKEN>/sample	Samples list and details	`samples`
API Users https://icatplus.esrf.fr/catalogue/<SESSION_TOKEN>/user	Users list and details	`users`
API Reports https://icatplus.esrf.fr/doi/<DOI>/reports	Reports URI List	`reports`

Data Collection: Full pipeline

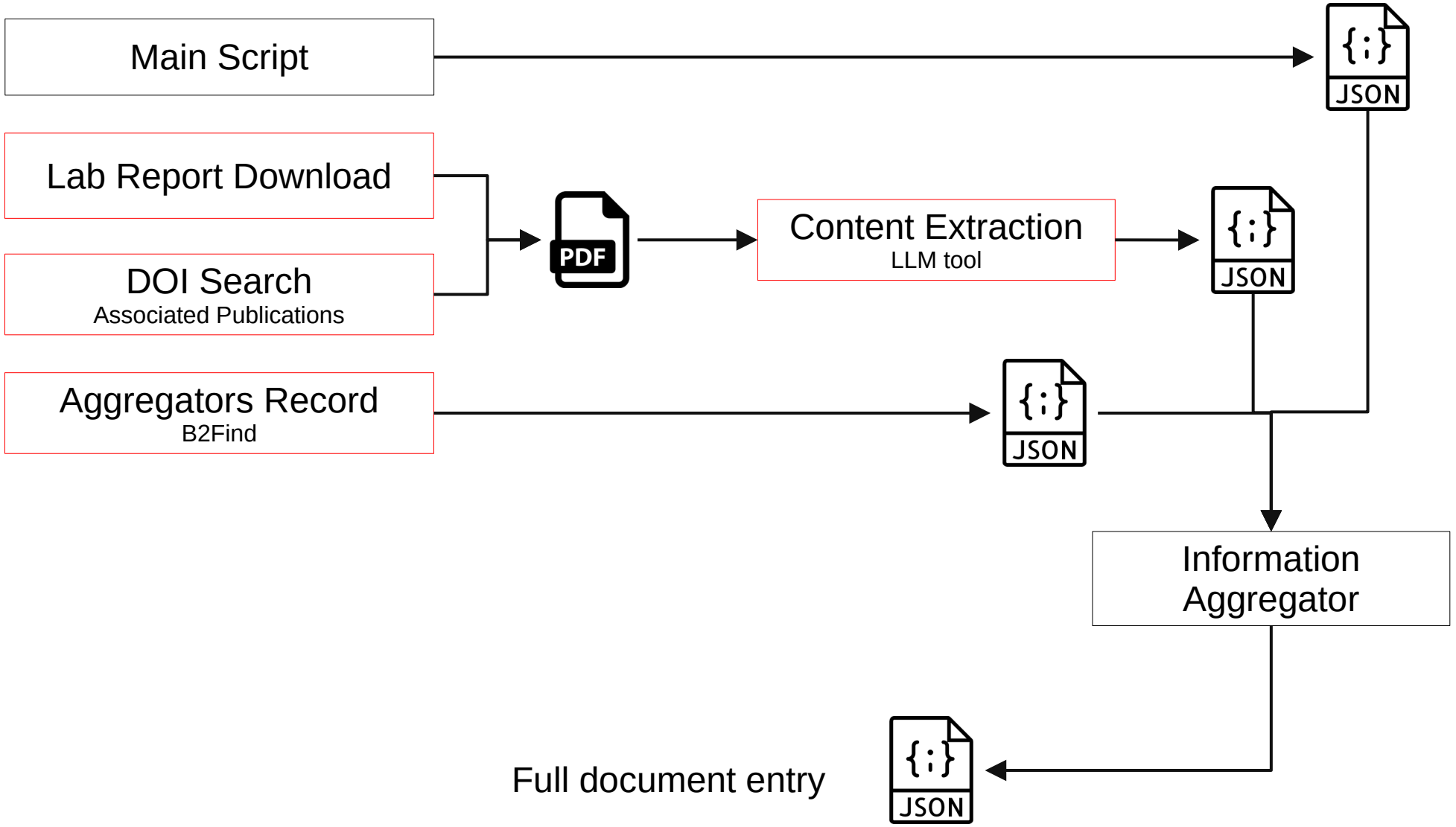

Collected data


```
{
  "timestamp": 1706220909,
  "metrics": [
    {"name": "p50", "unit": "us", "value": 156},
    {"name": "p90", "unit": "us", "value": 135},
    {"name": "p99", "unit": "us", "value": 290}
  ],
  "attributes": {
    "git_repo": "https://github.com/mytest/test",
    "branch": "main",
    "git_commit": "6995e2de6891c724bfeb2db33d7b87775f913ad2"
  }
}
```

Collected Data: Example 1


```
▶ panosc:                { pid: "651037210", isPublic: true, type: "MA", … }
▶ datacite:              { doi: "10.15151/ESRF-ES-651037210", url: "https://doi.esrf.fr/10.15151/ESRF-ES-651037210", publicationYear: "2025", … }
▼ document:
    name:                "MA-5093"
    startDate:           "2022-02-23T08:00:00.000+01:00"
    endDate:             "2022-02-25T08:00:00.000+01:00"
    id:                  651037210
    doi:                 "10.15151/ESRF-ES-651037210"
    title:               "Elucidating the complex rheological behavior of industrially relevant ceramic-based stereolithography pastes"
    visitId:             "MA/5093 ID02 23-02-2022/25-02-2022"
    releaseDate:         "2025-02-25T08:00:00.000+01:00"
  ▶ summary:             "We aim to understand the rheological behaviour of an industrially relevant ceramic-based stereolithography (SLA) photocurabl…la
  ▶ parameters:          { __fileCount: "4144", __volume: "283791067940", __datasetCount: "6", … }
  ▶ instrument:          { name: "ID02", id: 199806206, instrumentScientists: [] }
    investigationUsers:  []
▶ datasets:              (6)[ {…}, {…}, {…}, {…}, {…}, {…} ]
▶ reports:               [ "http://ftp.esrf.fr/pub/UserReports/97764_B.pdf" ]
▼ samples:
  ▶ 0:                   { id: 660150187, name: "3Ycom", modTime: "2022-01-19T14:04:45.609+01:00", … }
  ▶ 1:                   { id: 660150162, name: "3Yhome", modTime: "2022-01-19T14:04:45.519+01:00", … }
  ▶ 2:                   { id: 706911070, name: "Align", modTime: "2022-02-23T11:58:41.657+01:00", … }
  ▶ 3:                   { id: 660150141, name: "Alucom", modTime: "2022-01-19T14:04:45.406+01:00", … }
  ▶ 4:                   { id: 708484044, name: "Rheo", modTime: "2022-02-24T19:27:11.395+01:00", … }
  ▶ 5:                   { id: 708630859, name: "RheoCap", modTime: "2022-02-24T21:59:24.275+01:00", … }
  ▶ 6:                   { id: 707374734, name: "Rondelles", modTime: "2022-02-23T19:25:53.364+01:00", … }
  ▶ 7:                   { id: 708737672, name: "Static", modTime: "2022-02-24T23:39:18.192+01:00", … }
▼ users:
  ▶ 0:                   { fullName: "William CHEVREMONT", email: "william.chevremont@esrf.fr", familyName: "Chevremont", … }
  ▶ 1:                   { fullName: "Sylvain FOURNIER", email: "sylvain.fournier@insa-lyon.fr", familyName: "Fournier", … }
  ▶ 2:                   { fullName: "Pablo GRIFFITHS", email: "pablo.griffiths@insa-lyon.fr", familyName: "Griffiths", … }
  ▶ 3:                   { fullName: "Jérôme CHEVALIER", email: "jerome.chevalier@insa-lyon.fr", familyName: "Chevalier", … }
  ▶ 4:                   { fullName: "GUILHEM BAEZA", email: "guilhem.baeza@insa-lyon.fr", familyName: "Baeza", … }
```


ESRF
The European Synchrotron

Collected Data: Example 2


```
15:
  document:
    doi:                  "10.16907/a672b15a-9973-4d92-bf1e-3488cdfb4d1b"
    creator:              [ " Mattia Pistone; Julie F. Fife; Nicola Tisato; Luca Caricchi; Eric Reusser; Peter Ulmer; Kevin Mader; Federica Marone" ]
    publisher:            "PSI"
    publicationYear:      2021
    title:                "Felsic magma vesiculation revealed by synchrotron-based X-ray tomographic microscopy"
    url:                  ""
    abstract:             "Magma reservoirs are not directly accessible, limiting our capability to understand the prerequisites for an explosive erupt…tivity. Specifically,
    dataDescription:      "\nThis data collection contains X-ray tomographic scans of a felsic magma (natural obsidian of Mayor Island) vesiculating at…t room temperature pr
    resourceType:         "derived"
    numberOfFiles:        null
    sizeOfArchive:        null
    pidArray:
      0:                  "20.500.11935/36359608-7fda-4e88-8efe-d9e23a1724e3"
      1:                  "20.500.11935/b7397a97-6eab-49dd-8a1f-20ab9ee09f81"
      2:                  "20.500.11935/290f09e4-6acf-4235-9dc2-7ecc4b038e26"
      3:                  "20.500.11935/4e00104f-93bc-4fb0-92b4-5ec4ac5dadbc"
      4:                  "20.500.11935/d2eaa62f-33b4-44c2-a46d-4d6638645a3f"
      5:                  "20.500.11935/c184889c-0f23-474b-a682-ece3b40fa9bc"
      6:                  "20.500.11935/3831c4ae-9190-4258-90bd-d2188b55be65"
      7:                  "20.500.11935/829e4ca4-9235-4f7d-a391-1bef248cc017"
      8:                  "20.500.11935/84de73dd-4006-4927-8029-42cb4a147080"
    registeredTime:       "2021-04-01T12:50:36.943Z"
    status:               "registered"
    relatedPublications:  [ 'Pistone, M., Fife, J.L., Tisato, N., Caricchi, L., Reusser, E., Ulmer, P., Mader, K., Marone, F., "Seismic attenuation during magma vesiculation
    downloadLink:         null
    createdBy:            "ms-ad.marone"
    updatedBy:            "archiveManager"
    createdAt:            "2021-04-01T12:49:56.491Z"
    updatedAt:            "2021-04-27T13:31:55.291Z"
  datasets:               (9)[ {…}, {…}, {…}, {…}, {…}, {…}, {…}, {…}, {…} ]
  panosc:
    pid:                  "10.16907/a672b15a-9973-4d92-bf1e-3488cdfb4d1b"
    isPublic:             true
    type:                 "publication"
    title:                "Felsic magma vesiculation revealed by synchrotron-based X-ray tomographic microscopy"
    summary:              "Magma reservoirs are not directly accessible, limiting our capability to understand the prerequisites for an explosive erupt…tivity. Specifically,
    doi:                  "10.16907/a672b15a-9973-4d92-bf1e-3488cdfb4d1b"
    score:                0
    releaseDate:          "2021-01-01T00:00:00.000Z"
```

The Ingestor

Ingestion… Current

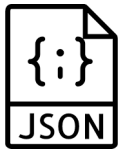

For each document

Statistical Chunker,
sentence-transformer/all-miniLM-L12-V2

Document Ingestor	Insert Record in Document table
Chunk Ingestor	Create chunks and relative embeddings from title and abstract
Summary Ingestor	Create short summary from title and abstract → Gpt-4.1-mini
Filter Ingestor	Create explicit filters (key, value pairs) and relative key embedding
Numeric Filter Ingestor	Create derived filters with value and unit, including min and max
Filter Value Converter	Convert value to proper type: boolean, numeric and timestamp
Filter Enricher	Add implicit filters for facility and beamline/instrument

Ingestion… Database

Document
- DOI
- Title
- Abstract
- Summary
- Embedding

Chunks
- Document
- Chunk
- Embedding

Filter
- Document
- Type
- Key
- Value
- Unit

Filter key
- Key
- Embedding

Ingestion… Future

Implicit Filters	Extract implicit filters (key,value) from text
Technique discover	Assign possible technique and confidence level based on content
Keywords	Extract meaningful keywords

User Prompt

Answer to a User Prompt

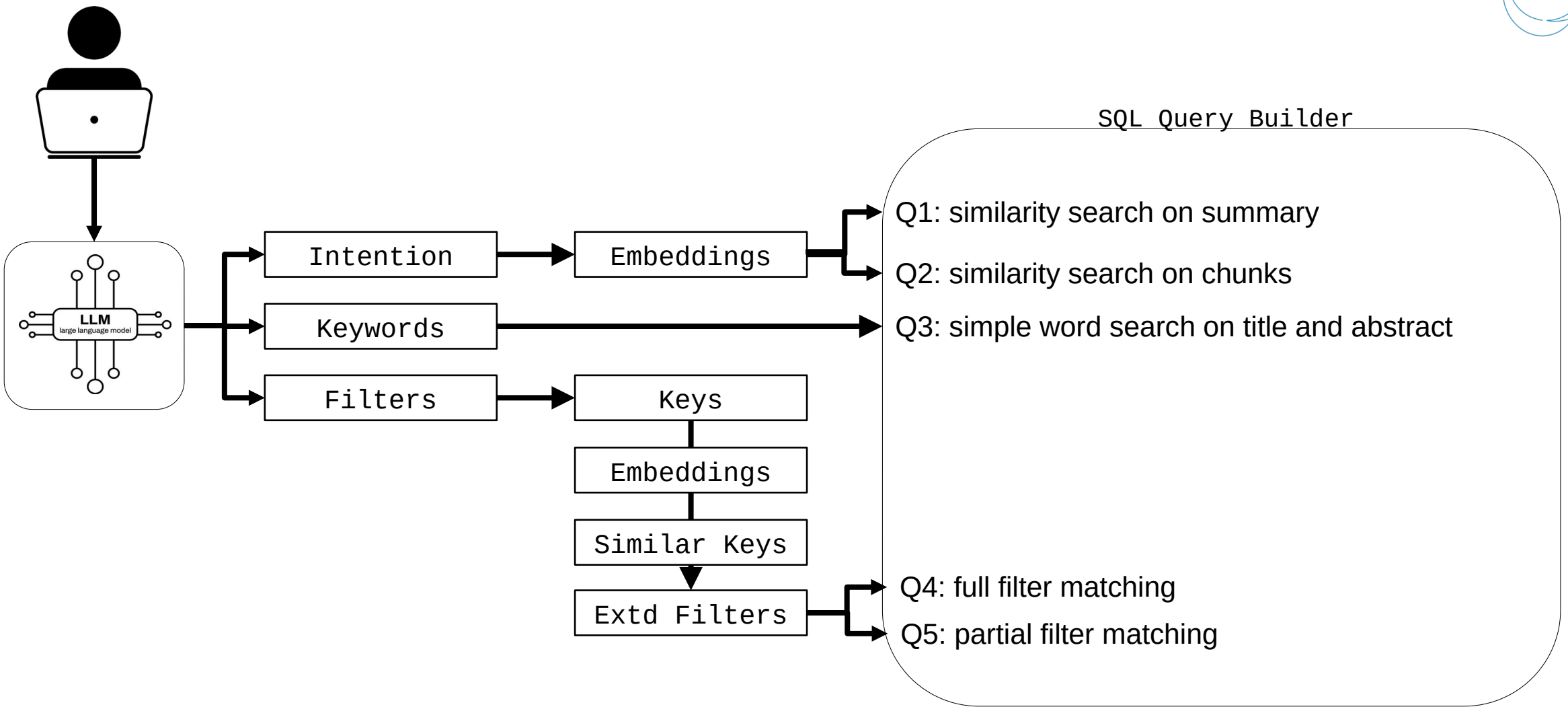

Answer to a User Prompt… continued

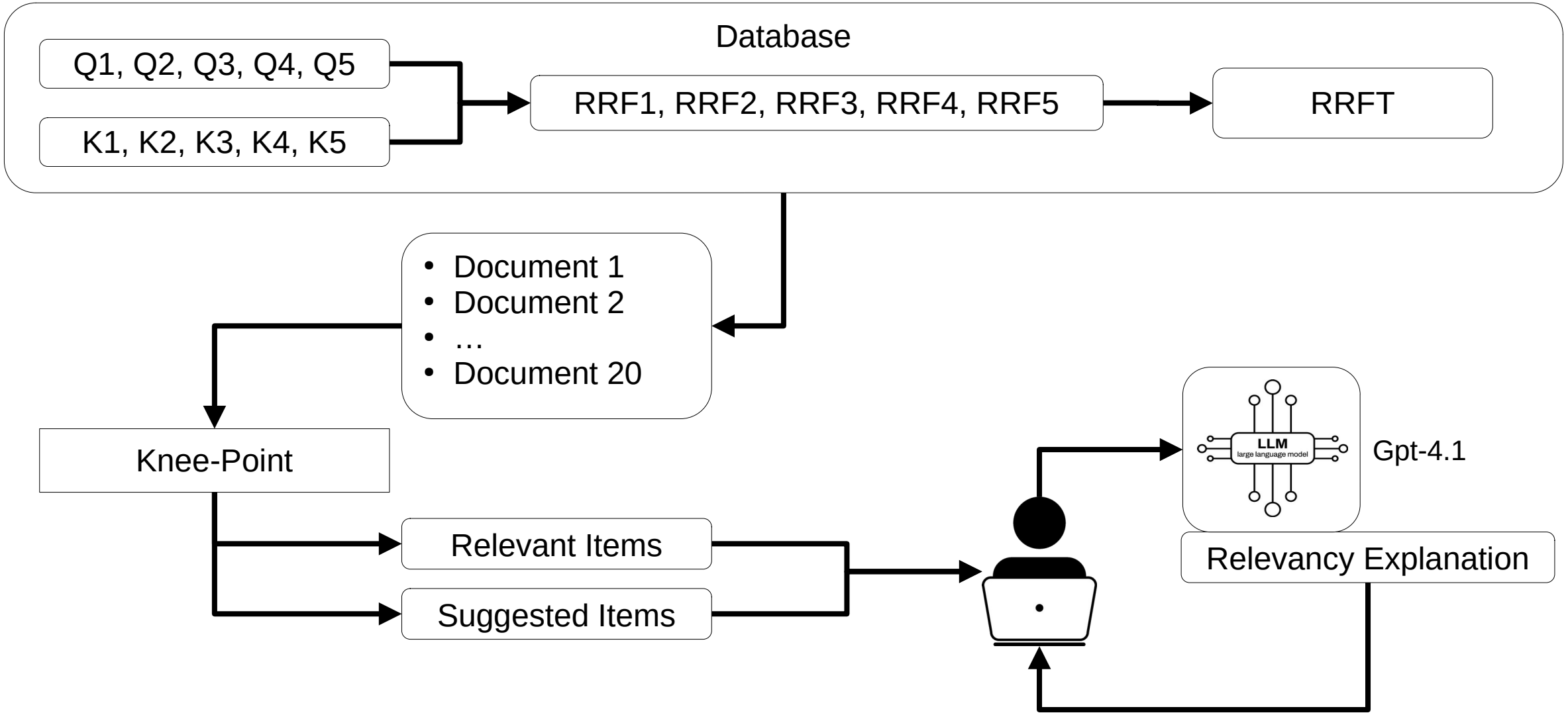

Looking ahead

Future work

- Benchmarking
- Testing different configuration
  - Data curation and queries
  - Different hyper-parameters
  - Different models (size, cost, performance)
  - Prompt Engineering
  - Model fine tuning
- User feedback in 1-on-1 sessions,
  - Answers validation
  - Missing information
  - UI improvements

Thank you for your attention

Questions?

Max Novelli
max.novelli@ess.eu

Janos Babic
janos.babic@ess.eu