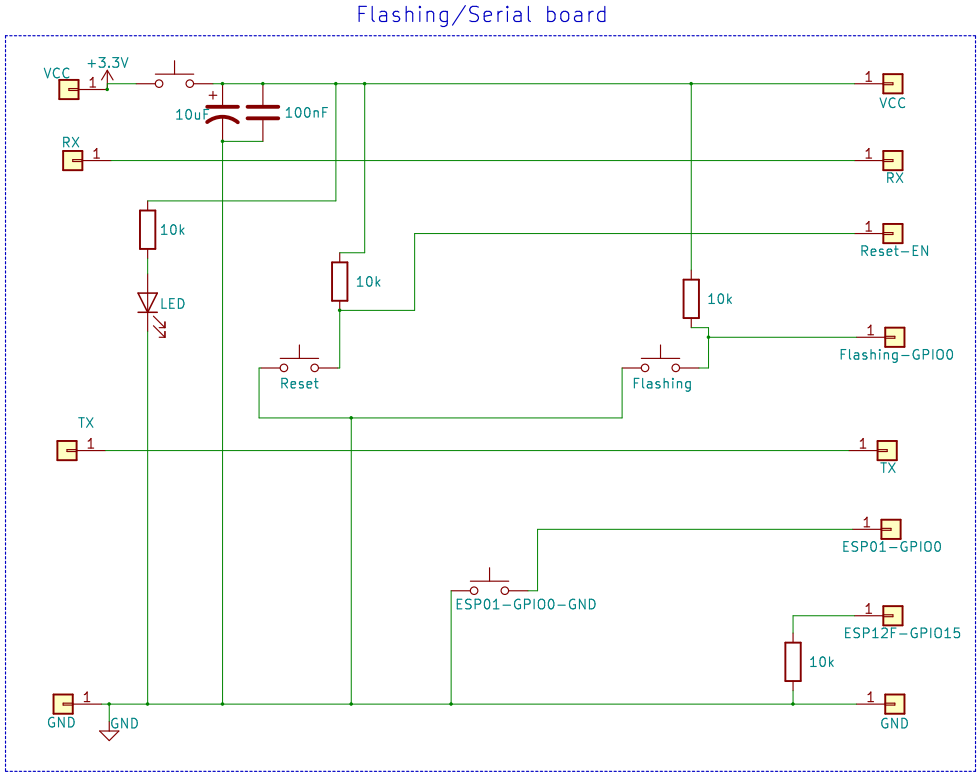

Serial Bridge: CH340

Autor: Pabllo Lins

Sheet: /
File: Placa_gravacao_modulos_CH340.sch

Title: Flashing/Serial board for Espressif modules

Size: A4	Date: 2021-03-30	**Rev: Rev 01**
KiCad E.D.A. kicad (5.1.5)-3		Id: 1/1