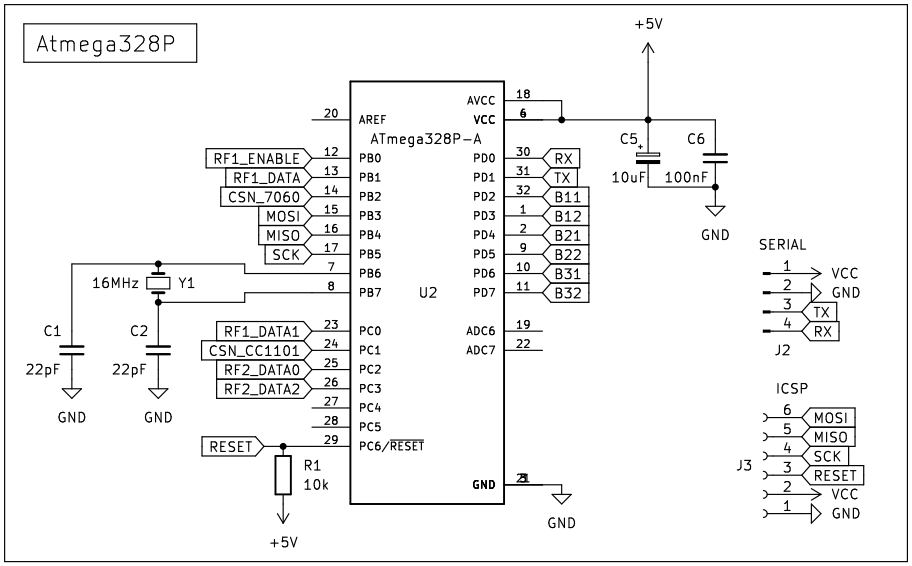


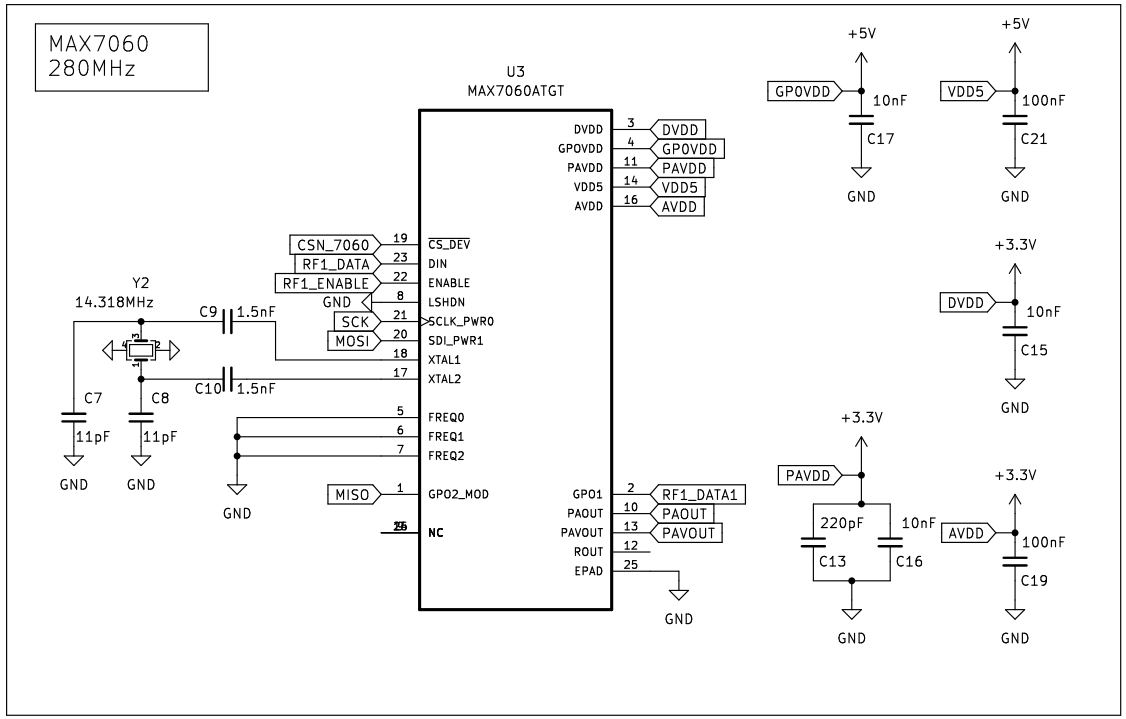


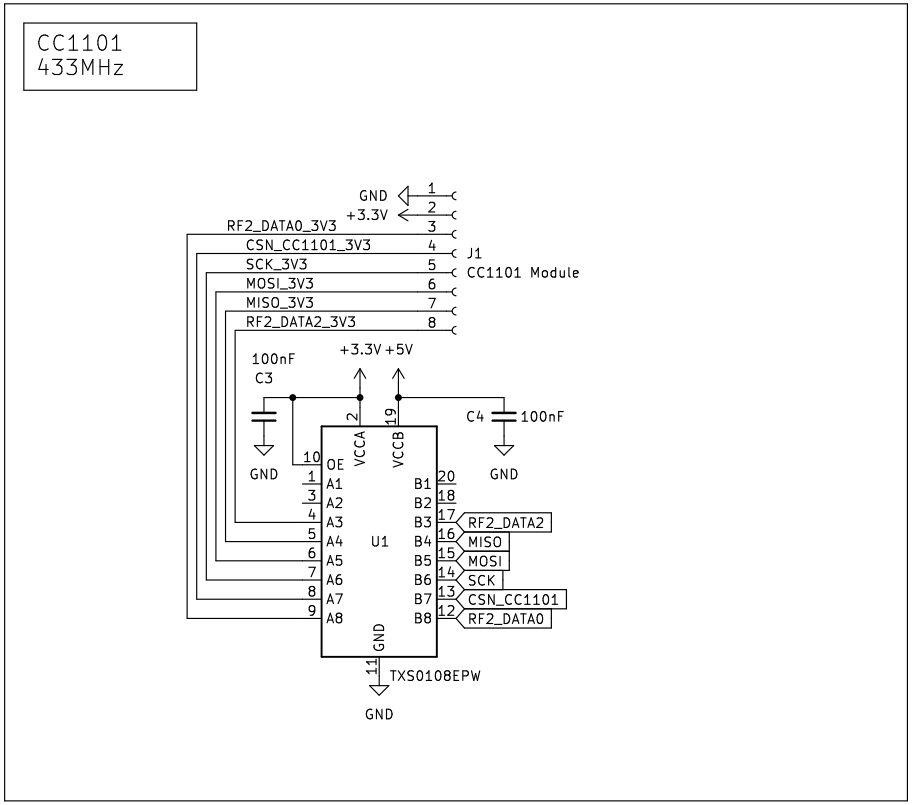


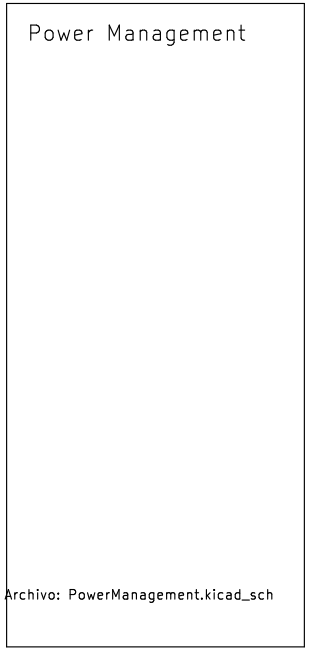


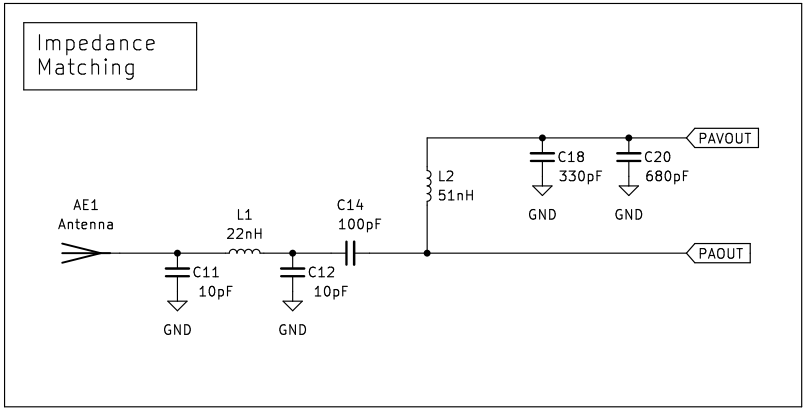


ortizma.com

Garage remote able to open doors using a wide range of RF parameters and protocols

**Pablo Ortiz López**

Sheet: /

File: GarageRemote.kicad_sch

***Title: Garage Remote***

| | | |
|---|---|---|
| Size: A4 | Date: 2023-07-05 | **Rev: 2.0.0** |
| KiCad E.D.A. kicad 7.0.6 | | Id: 1/2 |

## Power

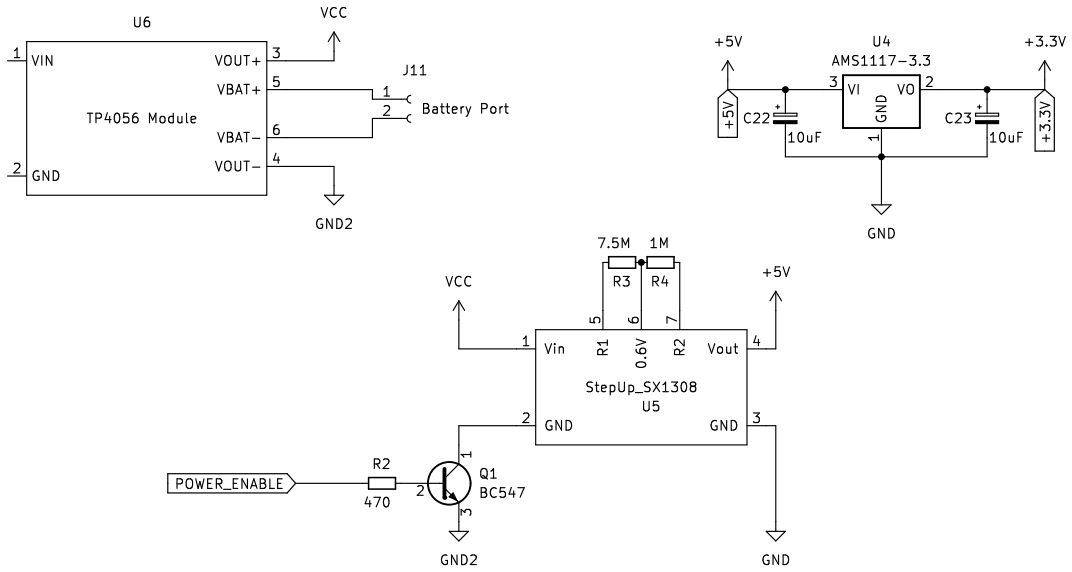


## User Input

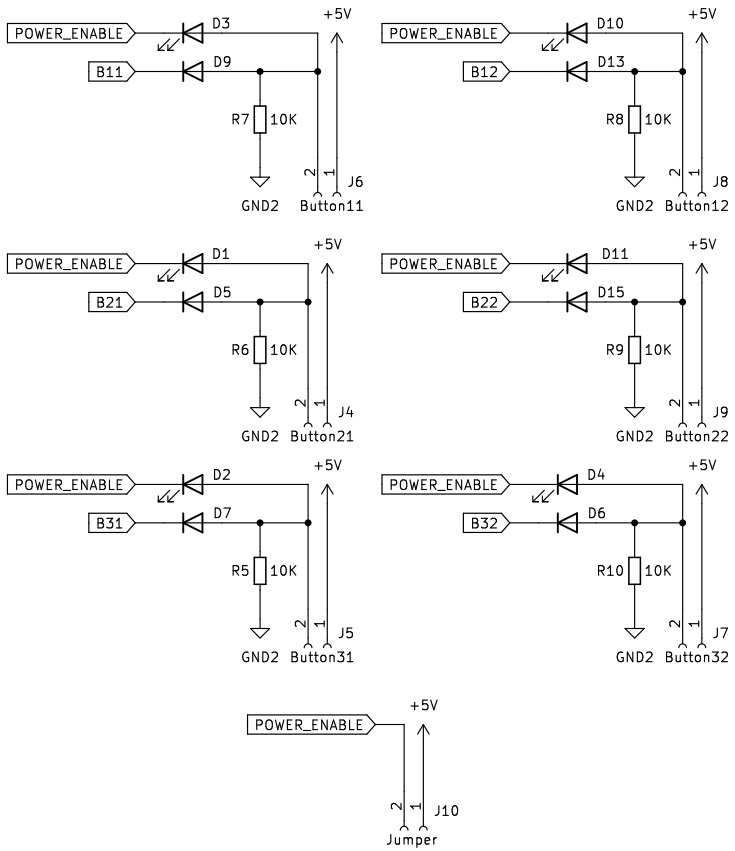


ortizma.com

Rechargeable, Li-Po battery based PSU with 2µA quiescient current

**Pablo Ortiz López**

Sheet: /Power Management/

File: PowerManagement.kicad_sch

***Title: Power Management for Garage Remote***

| | | |
|---|---|---|
| Size: A4 | Date: 2023-08-14 | **Rev: 1.0.0** |
| KiCad E.D.A. kicad 7.0.6 | | Id: 2/2 |