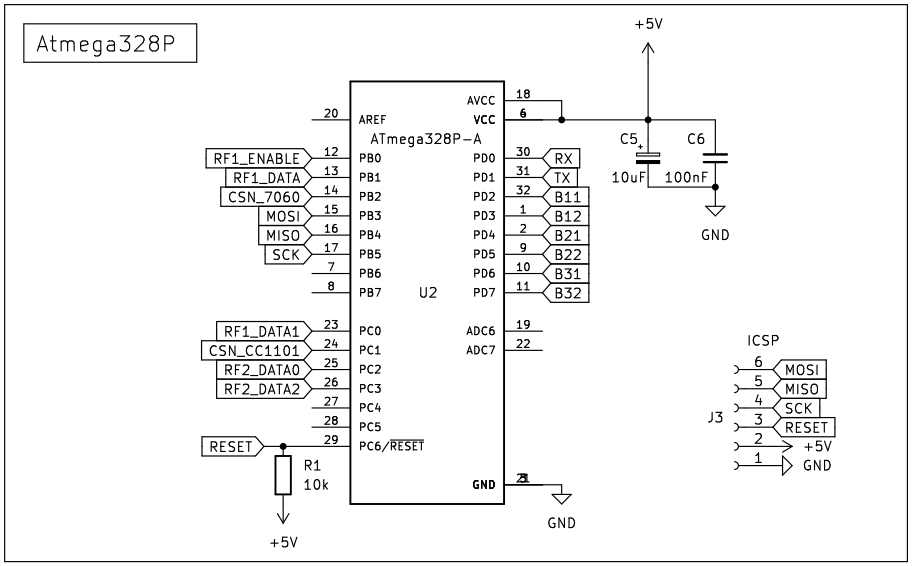

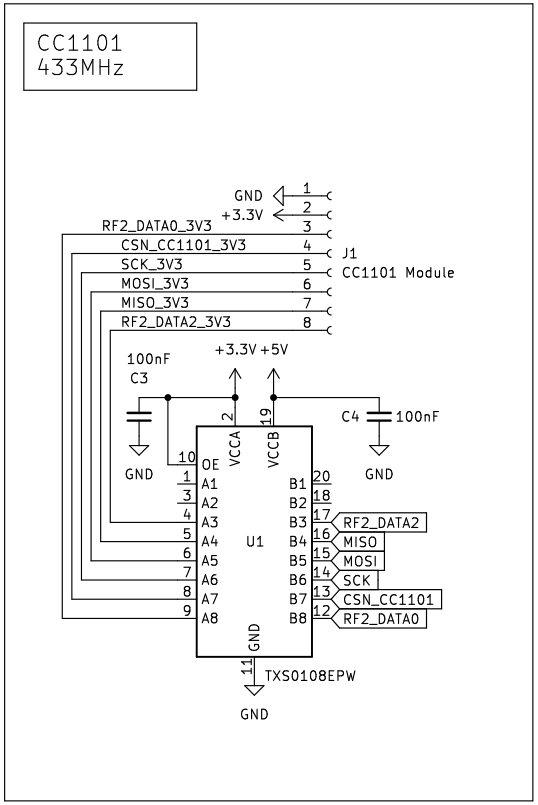

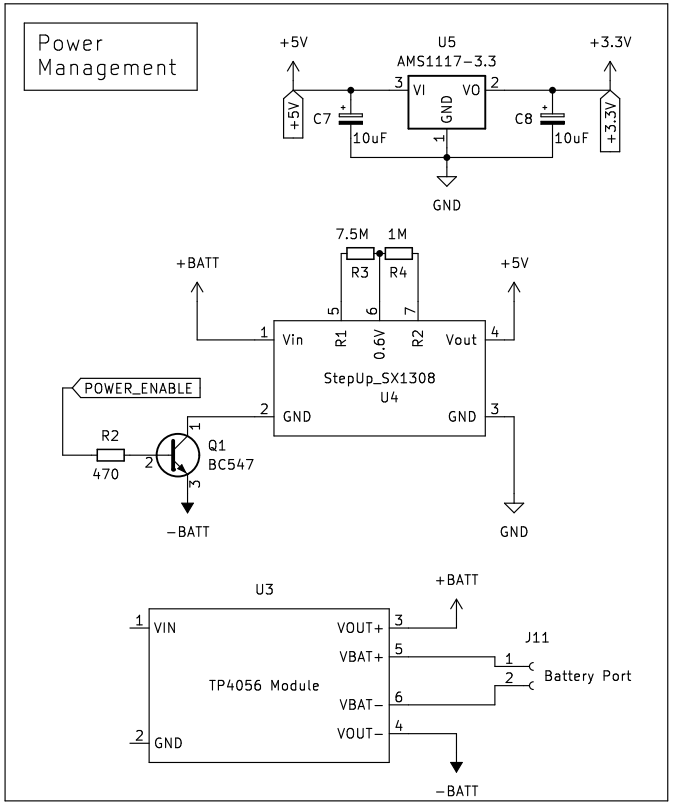

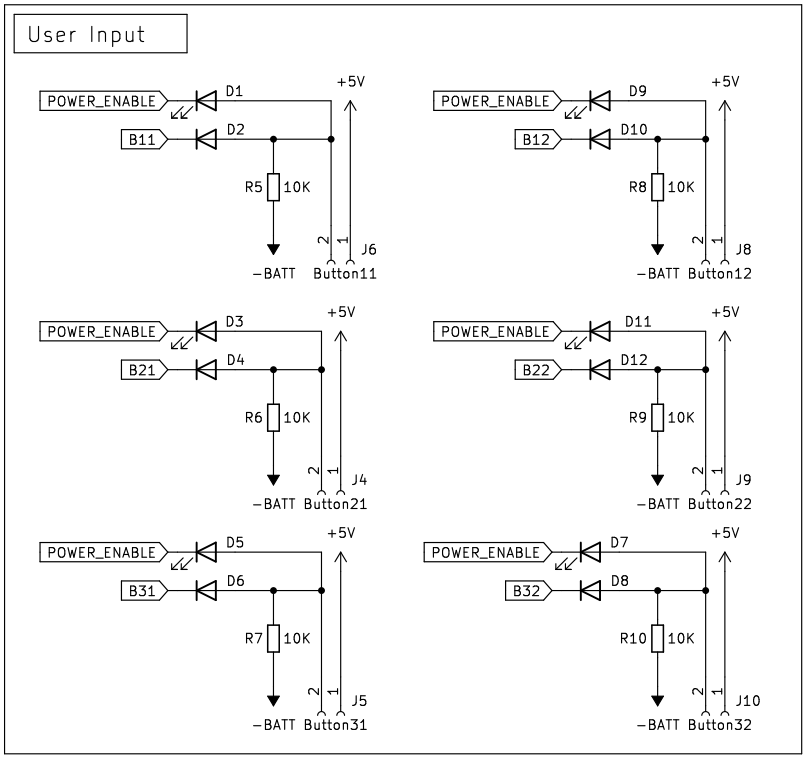

ortizma.com

Garage remote able to open doors using a wide range of RF parameters and protocols

Pablo Ortiz López

Sheet: /

File: GarageRemote.kicad_sch

Title: Garage Remote

Size: A4	Date: 2023-07-05	**Rev: 1.1.0**
KiCad E.D.A. kicad 7.0.6		Id: 1/1