GEORGE Structures (ConOps DRAFT 2)

Overview (P. Arroyo, Y. Chandar, H. Dei):

This system is heavily reliant on the other groups selecting hardware for us to design around. Current spacecraft design inspirations include the deployable Starlink units and the foldable structures of the James Webb Telescope. Calculations of expected load during takeoff, and at other stages of flight and mid-manoeuver are provided below. In addition, point masses represent subsystems, and some vibrational analysis based on the launch environment has been included below for various iterations. The final component is an analysis of the sensitivity of some parameters like the center of gravity, inertial matrix, etcetera versus changes in the geometry and position of other subsystems. CAD models are of fidelity high enough to accurately model mass properties and no further in anticipation of spacecraft component masses and positions changing frequently.

Objectives of the Structures Subteam (P. Arroyo, Y. Chandar, H. Dei):

As a unit, our goal is to serve as the backbone of GEORGE and facilitate successfully meeting design objectives. We must enable the:

1. Investigation of the nature and patterns of Europan cryovolcanism.
2. Identification of the causes of this geographic activity.
3. Analysis the frequency of any occurrences.
4. Evaluation of the geographical distribution of this activity.

This indicates a clear need to detect events, so we are responsible for ensuring the system is capable of providing this functionality, upon arrival at the mission location and for as long as possible beyond then.

As a sub-team our fundamental requirements are to facilitate:

1. Instrumentation Integration, including:
    a. Instrument mounting geometry
    b. Resonance mode avoidance
    c. Wire harness access
    d. Integration feasibility
2. Mass Tracking
3. Coordinate Selection

Deliverables (P. Arroyo, Y. Chandar, H. Dei):

1. CAD Models of at least 3 GEORGE chassis iterations.
2. Threeview and Wireframe Drawings of GEORGE chassis iterations.
3. Wiring Diagram to clearly track wire placement.
4. Normal Mode Vibrational Analysis of GEORGE for the first 12 modes.
5. Finite Element Analysis of GEORGE to determine exact vibrational loading at determined locations for launch environments.

6. Mass Properties:
    a. Spreadsheet of Center of Mass of each subsystem and major components
    b. Inertia Matrix
    c. Spreadsheet of Mass Budget with Margins
7. Margins of Safety and Appropriate Justifications.
8. Structural Analysis of all subsystems in isolation and fully interfaced and Evaluation of Payload.
9. Ashby chart with Selection Index to justify choice in thermal protection material
10. A proper design and a boom model (if necessary) that meets the requirements of both the Structures and Payload Subteams.

The Overall Flow of Information and Operations is given below where we must gather requirements from other subteams and research integration processes, static loads, vibrational loads, thermal protection systems, power and wiring requirements, total masses, etcetera:

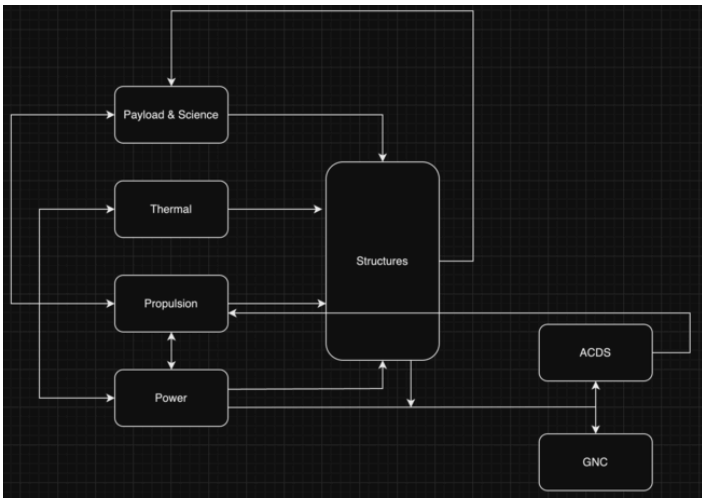

Credit: H. Dei.

Drawings and Design (P. Arroyo, Y. Chandar, H. Dei):

1. CAD will be handled primarily through SolidWorks/OnShape depending on team preference.
2. CFD where necessary may require the use of US3D and/or hand-calculations.
3. Dimensions will be precise to at least the nearest millimeter. Payload and propulsion requirements take precedence over all other subsystems.
4. Coordinate axes are as follows:
    a. X in Length.
    b. Y in Width
    c. Z in Height

d. Any and all drawings will be to the highest fidelity necessary to precisely compute a center of gravity and create a complete, coherent assembly with no mating faults and will provide no further precision. Any such requirements must be handled by the subteam in question.

Our next steps from here are to perform a trade study of the various chassis options for GEORGE based on existing designs to determine what is the most realistic option for this mission.

Structures trade for power system:
Solar Panels: Need array area, mass of array, location of array, deploy mechanism
RTGs: Need number of RTGs 300W, size of RTGs (1.14 m Length, .41 m dia), mass of RTGs (56 kg each), amount of shielding

Europa clipper bus design but cassini power module (science instruments similar, power reqs)

Hand drawings of possible positioning of instruments

CAD image or 2 of bus

Vibrational analysis to-date and future work.

PSD from falcon heavy (general environments information)

Mass Properties (P. Arroyo, H. Dei):

1. **Coordinate Frame (P. Arroyo)**

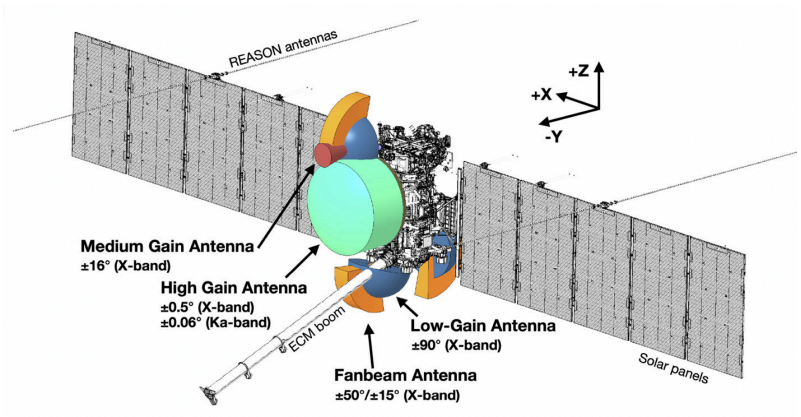

First and foremost, many reference coordinate frames exist for the Center of Mass and Inertial Matrices. In compliance with current literature, we shall use the coordinate frame illustrated below; credit to Mazariko et al. This particular iteration was in the context of the Europa Clipper. Due to the many shared mission requirements between these two projects, it was deemed appropriate for a coordinate system to also be shared.

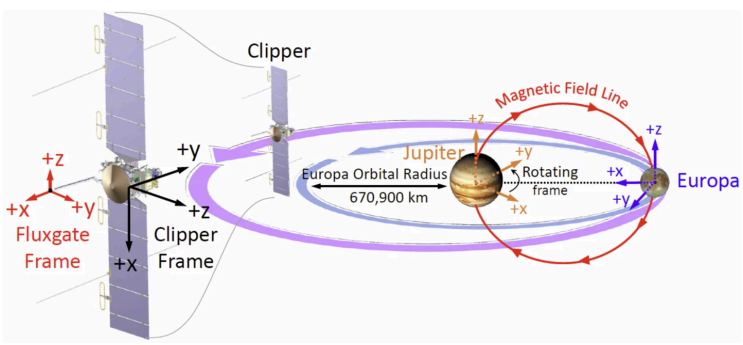

The second figure provides a diagram with Europa to help visualize positioning at any given instant. These coordinates are always relative to the body, and not relative to its general surroundings. Credit to Kivelson et al. for the second figure.

Structural Analysis & Margins of Safety (H. Dei, Y. Chandar):

1. **Margins of Safety**

   Computed as: FOS = (Measured - Allowable)/Allowable * 100%

   a. 20% on physically machined parts.
   b. 40% on untested but verified components.
   c. 100% on purely theoretical designs.
   d. 300% on test stands and testing apparatus.
   e. Specific MoS for sub-teams is in-progress; it will include justifications for components and more specific values.
      i. ACDS
      ii. CDH
      iii. GNC
      iv. Payload & Science

v. Power
vi. Propulsion
vii. Structures
viii. Systems
ix. Thermal

2.

Structural analysis will be expected to include buckling loads, limit loads, maximum supportable weight of various sections, and considerations of other failure criteria such as shearing, failure by thermal expansion, etcetera.

Loading Analysis During Launch (H. Dei)

The most significant loading GEORGE experiences will be during launch and due to internal loading when in orbit. When in orbit, although the force of gravitational attraction is not insignificant it (approximately) acts evenly around the entirety of GEORGE so its effects are disregarded.

At present, our goal is to launch via a Falcon Heavy. The image below in the appendix (Figure …) depicts the Falcon's Extended Payload Fairing, as specified by the Space Exploration Company (from hereafter referred to as SpaceX) and serves as an upper bound for how much space will be available to design the launch configuration of the GEORGE system.

The image above (Figure …) provides a PSD curve, as directly described by SpaceX in their User Manual, of the Falcon Heavy under standard launch conditions as described by SpaceX. In addition to our vibrational analysis, this data was used to qualify the system and evaluate what loads it would need to withstand to survive expected launch conditions. This is described further in the figures below.

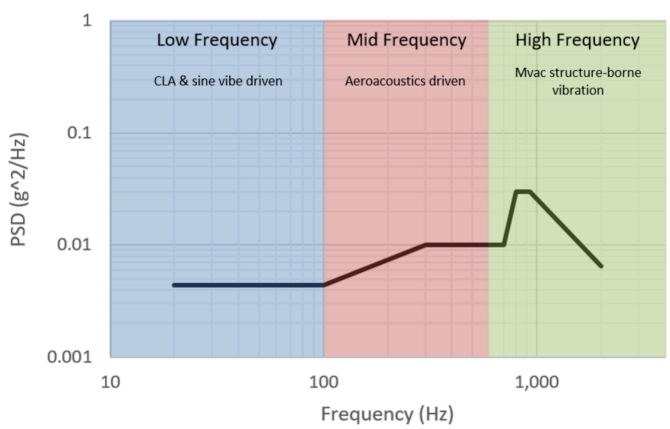

<<Section on vibrational analysis is to be completed upon finalized design>>

Finite Element Analysis and Normal Mode Analysis (P. Arroyo, H. Dei):

1. Primarily will be done through ANSYS to ensure that sll subsystems survive rocket vibration.
2. All meshes will have elements on order 1m for computational speed except near rounded corners or complex geometries where meshing is at the discretion of the structures team.
3. PSD curves will be used to evaluate total energy and dynamic analysis.

4. Mode 1, 2 and 3 frequencies will be most important. All frequencies, over mode 3, unless explicitly identified as problematic are to be computed but of lower priority.
5. The mode of any boom or hinged component with a significantly offset Center of Mass/Center of Gravity should be treated as a separate case and evaluated under its own failure criteria.

Individual Contributions:

1. Pablo Arroyo: CAD, Coordinate Frame Tracking, Mass Tracking
2. Yatin Chandar: CAD, Static Analysis, Logistics between teams
3. Hillel Dei: Material Selection, FEM, Dynamic Analysis, Documentation

References:

1. Payload Fairing Design: https://www.spacex.com/media/falcon-users-guide-2021-09.pdf

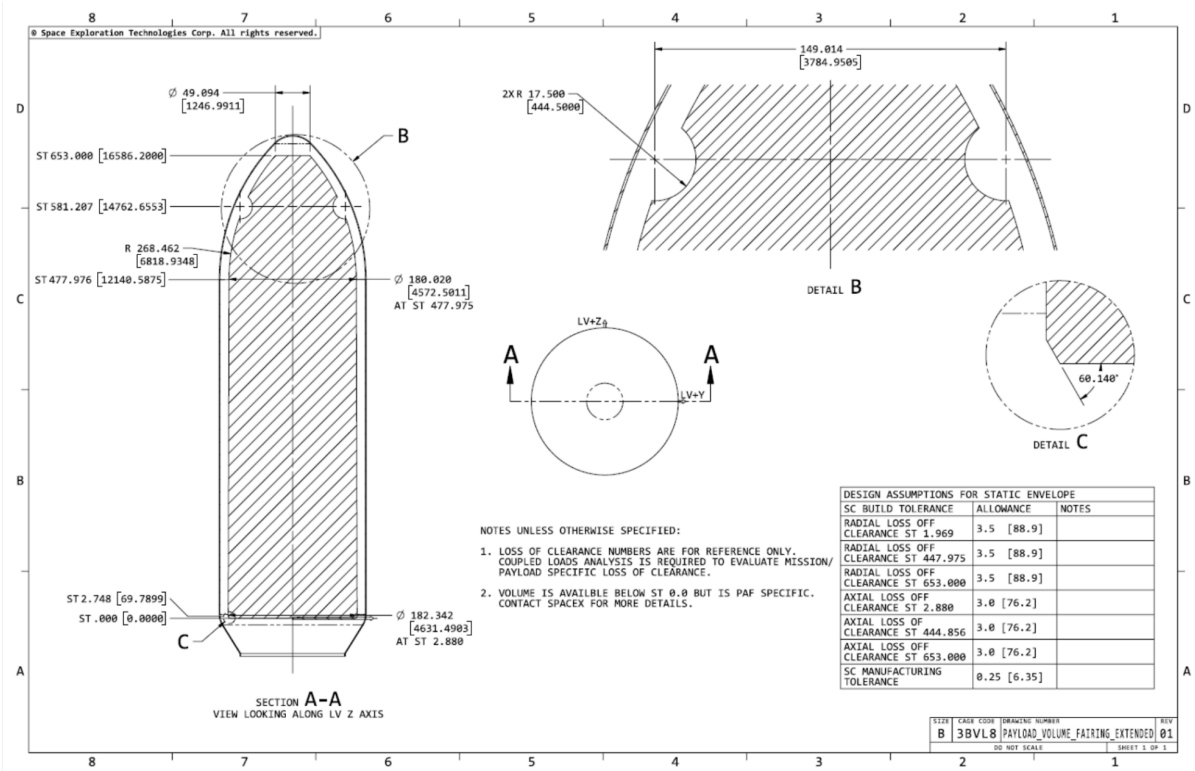

2. Vibration Profile Requirements: https://www.spacex.com/media/falcon-users-guide-2021-09.pdf

3. Example Mass Table: https://iopscience.iop.org/article/10.3847/PSJ/ac4493/pdf

Mass Table						Margin Table	
Name	Stage	CBE Dry (kg)	MPV Dry (kg)	Total Consumables (kg)	MPV Wet (kg)	Stacked Margin MPV-CBE / CBE (%)	JPL Margin MPV-CBE / MPV (%)
Carrier Stage (CS)	CS	**3160**	**4510**	**6895**	**11405**	**43%**	**30%**
Bio-Barrier (BB)	BB	**210**	**300**	**-**	**300**	**43%**	**30%**
DeOrbit Stage (DOS)	DOS	**195**	**280**	**1740**	**2020**	**43%**	**30%**
Descent Stage (DS)	PDV	580	830	410	1240	43%	30%
Lander Flight System	PDV	310	530	-	530	43%	30%
Lander Payload System	PDV	32	43	-	43	-	-
Powered Descent Vehicle (PDV)		**1010**	**1400**	**410**	**1810**	**43%**	**30%**
DeOrbit Vehicle (DOV)	DOS + PDV	**1205**	**1680**	**2150**	**3830**	**43%**	**30%**
Total Launch Mass (incl. LVA)		**4575**	**6490**	**9045**	**15535**	**43%**	**30%**

SLS Block 1b capability to C3 of 36 km²/s²: ~18,500 kg → ~3,000 kg of Launch Vehicle Margin

All stages meet JPL Design Principle Mass Margins

Figure 12. The mass equipment list for the Europa Lander mission concept is shown above for each stage and component of the flight system detailed in Figure 11. Current best estimates (CBEs) and maximum predicted values (MPVs) are shown for the "dry" (no fuel) and "wet" (with fuel) stack. Margins are shown at right, and Space Launch System capabilities are shown at bottom. Importantly, all stages meet JPL design principle mass margin requirements.

4. Europa Clipper Launch Configuration: https://iopscience.iop.org/article/10.3847/PSJ/ac4493/pdf

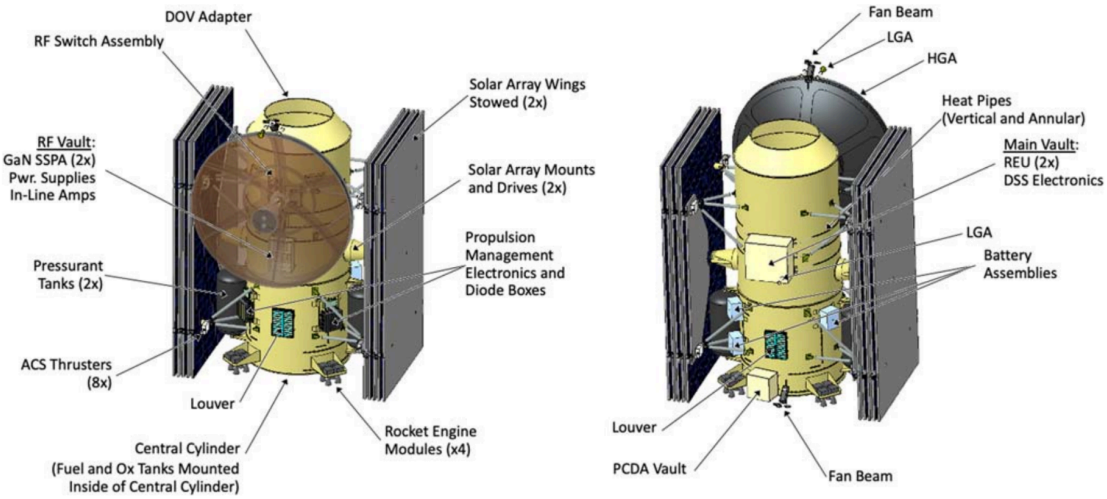

Figure 13. The full, integrated carrier stage (CS) configuration for the Europa Lander mission concept. Solar arrays are showed in stowed configuration. The high- and low-gain antennas (HGA and LGA) for the CS are shown for the two perspectives shown at left and right. Also shown are the adaptor for the Deorbit Vehicle (DOV), the vaults that protect the avionics and power from radiation, and the attitude-control (ACS) thrusters.

5. Proposed Hybrid Design (Casini Bus & Europa Clipper Elsewhere):
6. Loading Profiles (Internal in Orbit and Full-Body in Launch): https://ttu-ir.tdl.org/server/api/core/bitstreams/e7644c93-63bc-4c9b-a8bf-d22a461691c8/content

VI. Mechanical Design Challenges

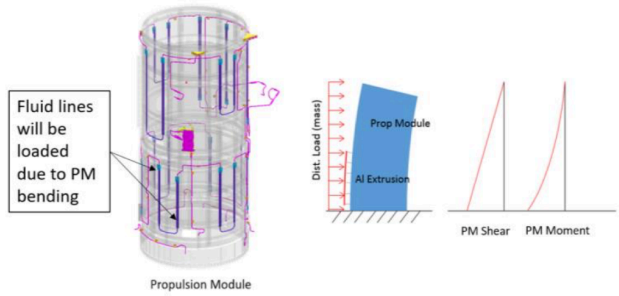

Figure 8. Propulsion Module bending leading to high stress in aluminum extrusions near launch vehicle interface.

A. Propulsion Module Sway and Bending

During launch loading, the PM is loaded both in line with the PM and orthogonally to the PM. The orthogonal loads tend to cause the PM to sway back and forth in a cantilever fashion. Since the thermal spreaders are installed vertically on the PM as shown in Fig. 8, the extrusions will tend to get strained when the PM structure begins to sway. Since the fluid lines are not intended to be primary structural members, it was determined that the most stressed portions of the extrusion joints should be allowed to slip in the vertical direction and thereby relieve some of the strain on the extrusions. To do this, the bolted joints on the extrusions at the bottom end of the spacecraft near the launch vehicle adaptor ring were designed to slip. When slipping a thermal spreader joint, two associated challenges arise:

1. Strain in the Nusil bonded joint
2. Possible bolted joint bearing loads

The Nusil strain concern was mitigated by analysis. The amount of displacement in the PM that is inflicted on the bonded joint was the worst case Nusil mechanical strain, but it still showed positive MS.

For bolted joints, it is best practice not to load a threaded column in bearing. To avoid bearing contact between the extrusions and their threaded fasteners, bolt clearance at the slipping joints must be guaranteed. Europa Clipper's HRS uses slots on the extrusions to enable the slipping joints.

7. Stress Analysis in Environmental Systems:

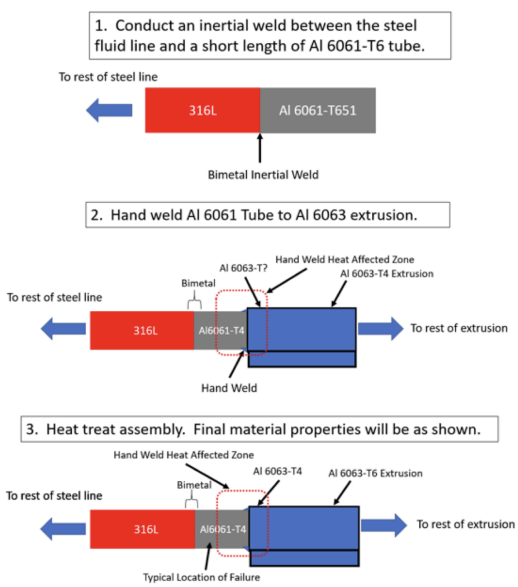

Figure 9. Stainless steel to aluminum extrusion welded transition region processing.

8. Thermal and Mechanical Loading of Joints:

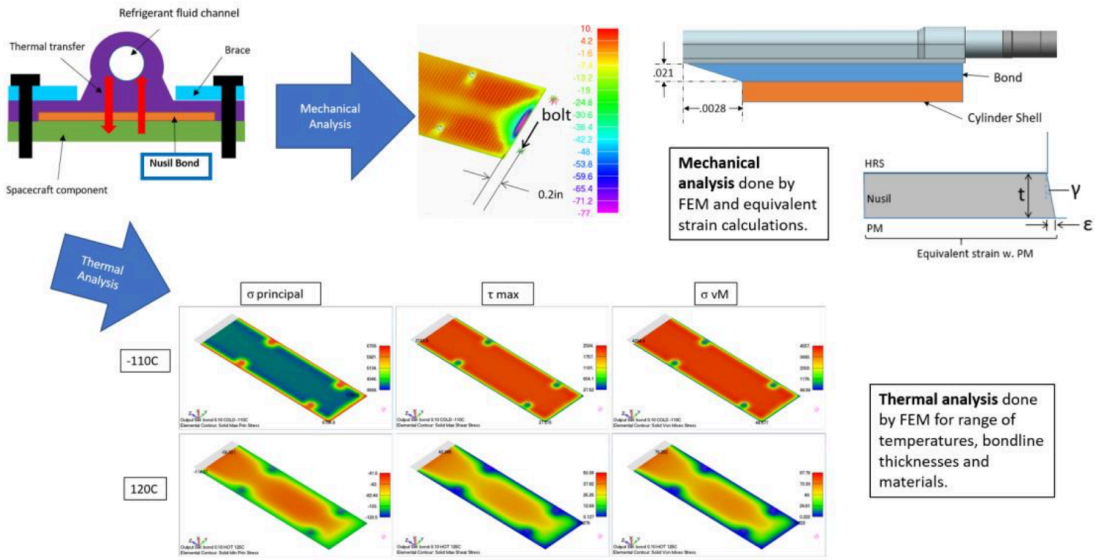

Figure 11. Nusil bond analysis: mechanical and thermal loading.

9. Flex Line Stiffness:

Table 7. Flex line stiffness data.

Stiffness Direction	Stiffness	Source
Lateral	**20 lbf/in** (3.50x10^3 N/m)	JPL, Test by P. Lytal
Axial	**5215 lbf/in** (9.13x10^6 N/m)	JPL, Test by R. Van Schilfgaarde
Torsional	**1480 in-lbf/rad** (167 N-m/rad)	JPL, Test by R. Van Schilfgaarde

Reference from sources are in imperial units as noted in parenthesis; these values should be used for best accuracy. SI units rounded to 3 significant digits.

10. Placement of Supports for Flex Lines:

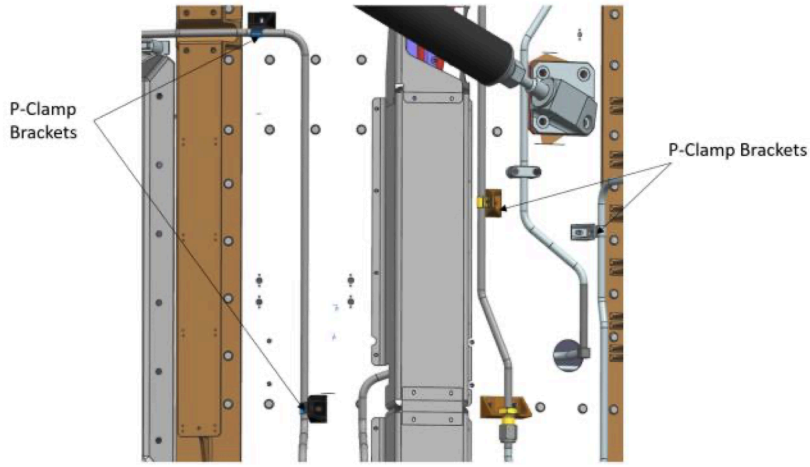

Figure 13. Placement of p-clamp structural supports.

11. Placement of Lines for Heating Array:

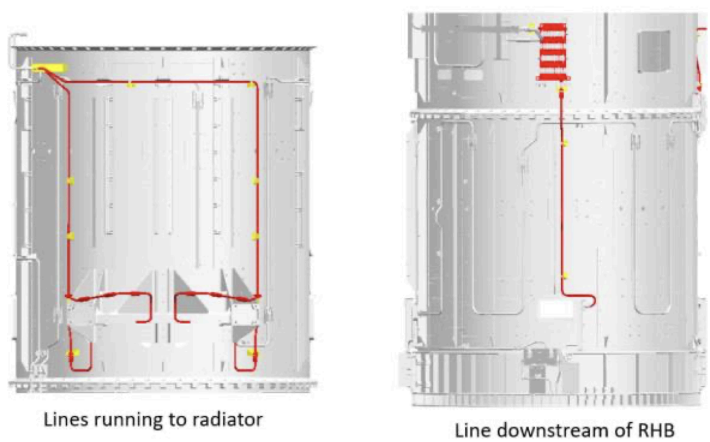

Figure 14. HRS lines where thermal isolation from the PM structure is preferred.

12. Folded configuration:

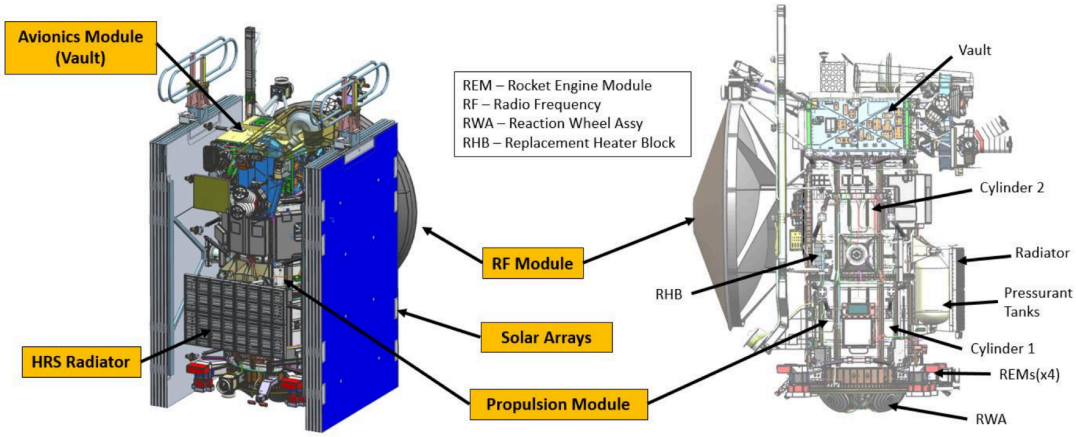

Figure 1. Europa Clipper spacecraft and its modules (at left with solar arrays stowed, and at right with solar arrays removed for clarity).

13. Reference Coordinate Frame with Europa Included:

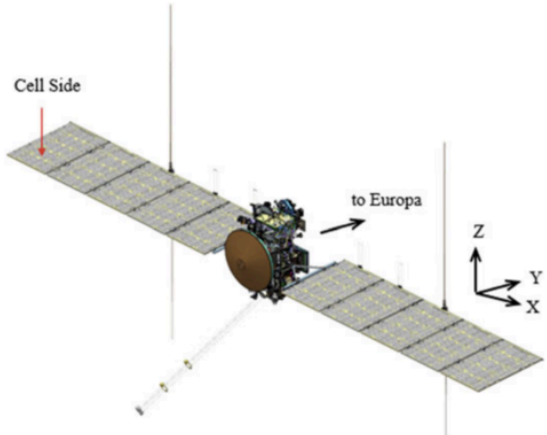

Fig. 8 Solar array orientation during Europa flyby

Operability on the Europa Clipper Mission … 615

Mazarico et al.: https://link.springer.com/article/10.1007/s11214-023-00972-0
Kivelson et al.: https://link.springer.com/article/10.1007/s11214-023-00989-5
SpaceX: https://www.spacex.com/media/falcon-users-guide-2021-09.pdf
Arya: https://thesis.library.caltech.edu/9734/1/arya_manan_2016.pdf

1. All mass properties and materials of designed parts must be correct and updated once part is committed to working CAD assembly model, to ensure accuracy.
2. The Center of Mass must be updated at least once a week to reflect changes made by other subteams (namely the Payload, Power and Propulsion subteams).
3. Center of Mass of major subcomponents should be identified and clearly indexed with fault lines and clearly established do not exceed values.