HIGH-VOLTAGE, HIGH-CURRENT DARLINGTON TRANSISTOR ARRAYS

Check for Samples: ULN2002A, ULN2003A, ULN2003AI, ULN2004A, ULQ2003A, ULQ2004A

FEATURES

- **500-mA-Rated Collector Current (Single Output)**
- **High-Voltage Outputs: 50 V**
- **Output Clamp Diodes**
- **Inputs Compatible With Various Types of Logic**
- **Relay-Driver Applications**

ULN2002A . . . N PACKAGE
ULN2003A . . . D, N, NS, OR PW PACKAGE
ULN2004A . . . D, N, OR NS PACKAGE
ULQ2003A, ULQ2004A . . . D OR N PACKAGE
(TOP VIEW)

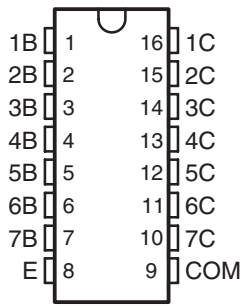

DESCRIPTION

The ULN2002A, ULN2003A, ULN2003AI, ULN2004A, ULQ2003A, and ULQ2004A are high-voltage high-current Darlington transistor arrays. Each consists of seven npn Darlington pairs that feature high-voltage outputs with common-cathode clamp diodes for switching inductive loads. The collector-current rating of a single Darlington pair is 500 mA. The Darlington pairs can be paralleled for higher current capability. Applications include relay drivers, hammer drivers, lamp drivers, display drivers (LED and gas discharge), line drivers, and logic buffers. For 100-V (otherwise interchangeable) versions of the ULN2003A and ULN2004A, see the SN75468 and SN75469, respectively.

The ULN2001A is a general-purpose array and can be used with TTL and CMOS technologies. The ULN2002A is designed specifically for use with 14-V to 25-V PMOS devices. Each input of this device has a Zener diode and resistor in series to control the input current to a safe limit. The ULN2003A and ULQ2003A have a 2.7-kΩ series base resistor for each Darlington pair for operation directly with TTL or 5-V CMOS devices. The ULN2004A and ULQ2004A have a 10.5-kΩ series base resistor to allow operation directly from CMOS devices that use supply voltages of 6 V to 15 V. The required input current of the ULN/ULQ2004A is below that of the ULN/ULQ2003A, and the required voltage is less than that required by the ULN2002A.

Please be aware that an important notice concerning availability, standard warranty, and use in critical applications of Texas Instruments semiconductor products and disclaimers thereto appears at the end of this data sheet.

PRODUCTION DATA information is current as of publication date. Products conform to specifications per the terms of the Texas Instruments standard warranty. Production processing does not necessarily include testing of all parameters.

Copyright © 1976–2010, Texas Instruments Incorporated

ORDERING INFORMATION(1)

T_A	PACKAGE(2)		ORDERABLE PART NUMBER	TOP-SIDE MARKING
–20°C to 70°C	PDIP – N	Tube of 25	ULN2002AN	ULN2002AN
			ULN2003AN	ULN2003AN
			ULN2004AN	ULN2004AN
	SOIC – D	Tube of 40	ULN2003AD	ULN2003A
		Reel of 2500	ULN2003ADR	
		Reel of 2500	ULN2003ADRG3	
		Tube of 40	ULN2004AD	ULN2004A
		Reel of 2500	ULN2004ADR	
	SOP – NS	Reel of 2000	ULN2003ANSR	ULN2003A
			ULN2004ANSR	ULN2004A
	TSSOP – PW	Tube of 90	ULN2003APW	UN2003A
		Reel of 2000	ULN2003APWR	
–40°C to 85°C	PDIP – N	Tube of 25	ULQ2003AN	ULQ2003A
			ULQ2004AN	ULQ2004AN
	SOIC – D	Tube of 40	ULQ2003AD	ULQ2003A
		Reel of 2500	ULQ2003ADR	
		Tube of 40	ULQ2004AD	ULQ2004A
		Reel of 2500	ULQ2004ADR	
–40°C to 105°C	PDIP – N	Tube of 425	ULN2003AIN	ULN2003AIN
	SOIC – D	Tube of 40	ULN2003AID	ULN2003AI
		Reel of 2500	ULN2003AIDR	
	TSSOP – PW	Reel of 2500	ULN2003AIPWR	UN2003AI

(1) For the most current package and ordering information, see the Package Option Addendum at the end of this document, or see the TI web site at www.ti.com.
(2) Package drawings, thermal data, and symbolization are available at www.ti.com/packaging.

LOGIC DIAGRAM

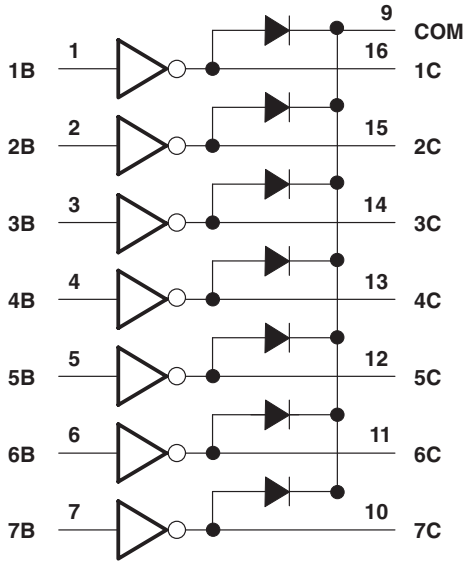

Copyright © 1976–2010, Texas Instruments Incorporated

SCHEMATICS (EACH DARLINGTON PAIR)

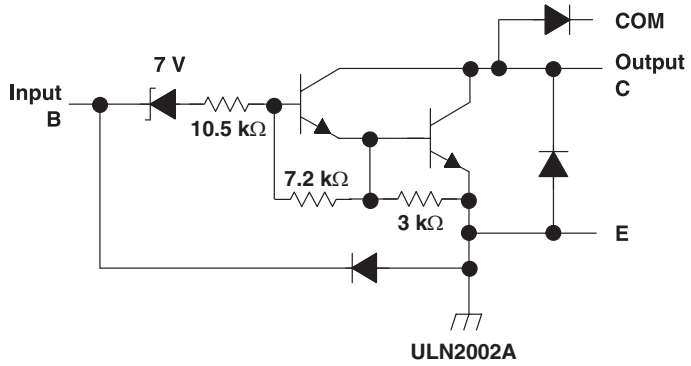

ULN2002A

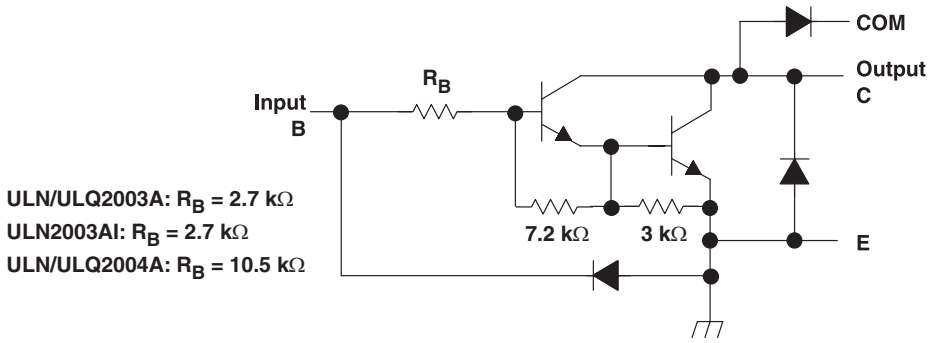

ULN2003A, ULN2003AI, ULN2004A, ULQ2003A, ULQ2004A

All resistor values shown are nominal.

The collector-emitter diode is a parasitic structure and should not be used to conduct current. If the collector(s) go below ground an external Schottky diode should be added to clamp negative undershoots.

ABSOLUTE MAXIMUM RATINGS[1]

at 25°C free-air temperature (unless otherwise noted)

			MIN	MAX	UNIT
V_{CC}	Collector-emitter voltage			50	V
	Clamp diode reverse voltage[2]			50	V
V_I	Input voltage[2]			30	V
	Peak collector current	See Figure 14 and Figure 15		500	mA
I_{OK}	Output clamp current			500	mA
	Total emitter-terminal current			–2.5	A
T_A	Operating free-air temperature range	ULN200xA	–20	70	°C
		ULN200xAI	–40	105	
		ULQ200xA	–40	85	
		ULQ200xAT	–40	105	
θ_{JA}	Package thermal impedance[3] [4]	D package		73	°C/W
		N package		67	
		NS package		64	
		PW package		108	
θ_{JC}	Package thermal impedance[5] [6]	D package		36	
		N package		54	
T_J	Operating virtual junction temperature			150	°C
	Lead temperature for 1.6 mm (1/16 inch) from case for 10 seconds			260	°C
T_{stg}	Storage temperature range		–65	150	°C

(1) Stresses beyond those listed under "absolute maximum ratings" may cause permanent damage to the device. These are stress ratings only, and functional operation of the device at these or any other conditions beyond those indicated under "recommended operating conditions" is not implied. Exposure to absolute-maximum-rated conditions for extended periods may affect device reliability.
(2) All voltage values are with respect to the emitter/substrate terminal E, unless otherwise noted.
(3) Maximum power dissipation is a function of $T_J(max)$, θ_{JA}, and T_A. The maximum allowable power dissipation at any allowable ambient temperature is $P_D = (T_J(max) – T_A)/\theta_{JA}$. Operating at the absolute maximum T_J of 150°C can affect reliability.
(4) The package thermal impedance is calculated in accordance with JESD 51-7.
(5) Maximum power dissipation is a function of $T_J(max)$, θ_{JC}, and T_A. The maximum allowable power dissipation at any allowable ambient temperature is $P_D = (T_J(max) – T_A)/\theta_{JC}$. Operating at the absolute maximum T_J of 150°C can affect reliability.
(6) The package thermal impedance is calculated in accordance with MIL-STD-883.

ELECTRICAL CHARACTERISTICS

T_A = 25°C

PARAMETER		TEST FIGURE	TEST CONDITIONS		ULN2002A MIN	ULN2002A TYP	ULN2002A MAX	UNIT
$V_{I(on)}$	On-state input voltage	Figure 6	V_{CE} = 2 V,	I_C = 300 mA			13	V
$V_{CE(sat)}$	Collector-emitter saturation voltage	Figure 4	I_I = 250 μA,	I_C = 100 mA		0.9	1.1	V
			I_I = 350 μA,	I_C = 200 mA		1	1.3	
			I_I = 500 μA,	I_C = 350 mA		1.2	1.6	
V_F	Clamp forward voltage	Figure 7	I_F = 350 mA			1.7	2	V
I_{CEX}	Collector cutoff current	Figure 1	V_{CE} = 50 V,	I_I = 0			50	μA
		Figure 2	V_{CE} = 50 V, T_A = 70°C	I_I = 0			100	
				V_I = 6 V			500	
$I_{I(off)}$	Off-state input current	Figure 2	V_{CE} = 50 V,	I_C = 500 μA	50	65		μA
I_I	Input current	Figure 3	V_I = 17 V			0.82	1.25	mA
I_R	Clamp reverse current	Figure 6	V_R = 50 V	T_A = 70°C			100	μA
							50	
C_i	Input capacitance		V_I = 0,	f = 1 MHz			25	pF

Copyright © 1976–2010, Texas Instruments Incorporated

ELECTRICAL CHARACTERISTICS

T_A = 25°C

PARAMETER		TEST FIGURE	TEST CONDITIONS		ULN2003A			ULN2004A			UNIT
					MIN	TYP	MAX	MIN	TYP	MAX	
$V_{I(on)}$	On-state input voltage	Figure 6	V_{CE} = 2 V	I_C = 125 mA						5	V
				I_C = 200 mA			2.4			6	
				I_C = 250 mA			2.7				
				I_C = 275 mA						7	
				I_C = 300 mA			3				
				I_C = 350 mA						8	
$V_{CE(sat)}$	Collector-emitter saturation voltage	Figure 5	I_I = 250 μA,	I_C = 100 mA		0.9	1.1		0.9	1.1	V
			I_I = 350 μA,	I_C = 200 mA		1	1.3		1	1.3	
			I_I = 500 μA,	I_C = 350 mA		1.2	1.6		1.2	1.6	
I_{CEX}	Collector cutoff current	Figure 1	V_{CE} = 50 V,	I_I = 0			50			50	μA
		Figure 2	V_{CE} = 50 V, T_A = 70°C	I_I = 0			100			100	
				V_I = 6 V						500	
V_F	Clamp forward voltage	Figure 8	I_F = 350 mA			1.7	2		1.7	2	V
$I_{I(off)}$	Off-state input current	Figure 3	V_{CE} = 50 V, T_A = 70°C,	I_C = 500 μA	50	65		50	65		μA
I_I	Input current	Figure 4	V_I = 17 V			0.93	1.35				mA
									0.35	0.5	
									1	1.45	
I_R	Clamp reverse current	Figure 7	V_R = 50 V				50			50	μA
				T_A = 70°C			100			100	
C_i	Input capacitance		V_I = 0,	f = 1 MHz		15	25		15	25	pF

ELECTRICAL CHARACTERISTICS

T_A = 25°C

PARAMETER		TEST FIGURE	TEST CONDITIONS		ULN2003AI			UNIT
					MIN	TYP	MAX	
$V_{I(on)}$	On-state input voltage	Figure 6	V_{CE} = 2 V	I_C = 200 mA			2.4	V
				I_C = 250 mA			2.7	
				I_C = 300 mA			3	
$V_{CE(sat)}$	Collector-emitter saturation voltage	Figure 5	I_I = 250 μA,	I_C = 100 mA		0.9	1.1	V
			I_I = 350 μA,	I_C = 200 mA		1	1.3	
			I_I = 500 μA,	I_C = 350 mA		1.2	1.6	
I_{CEX}	Collector cutoff current	Figure 1	V_{CE} = 50 V,	I_I = 0			50	μA
V_F	Clamp forward voltage	Figure 8	I_F = 350 mA			1.7	2	V
$I_{I(off)}$	Off-state input current	Figure 3	V_{CE} = 50 V,	I_C = 500 μA	50	65		μA
I_I	Input current	Figure 4	V_I = 3.85 V			0.93	1.35	mA
I_R	Clamp reverse current	Figure 7	V_R = 50 V				50	μA
C_i	Input capacitance		V_I = 0,	f = 1 MHz		15	25	pF

Copyright © 1976–2010, Texas Instruments Incorporated

ELECTRICAL CHARACTERISTICS

T_A = –40°C to 105°C

PARAMETER		TEST FIGURE	TEST CONDITIONS		ULN2003AI			UNIT
					MIN	TYP	MAX	
$V_{I(on)}$	On-state input voltage	Figure 6	V_{CE} = 2 V	I_C = 200 mA			2.7	V
				I_C = 250 mA			2.9	
				I_C = 300 mA			3	
$V_{CE(sat)}$	Collector-emitter saturation voltage	Figure 5	I_I = 250 μA,	I_C = 100 mA		0.9	1.2	V
			I_I = 350 μA,	I_C = 200 mA		1	1.4	
			I_I = 500 μA,	I_C = 350 mA		1.2	1.7	
I_{CEX}	Collector cutoff current	Figure 1	V_{CE} = 50 V,	I_I = 0			100	μA
V_F	Clamp forward voltage	Figure 8	I_F = 350 mA			1.7	2.2	V
$I_{I(off)}$	Off-state input current	Figure 3	V_{CE} = 50 V,	I_C = 500 μA	30	65		μA
I_I	Input current	Figure 4	V_I = 3.85 V			0.93	1.35	mA
I_R	Clamp reverse current	Figure 7	V_R = 50 V				100	μA
C_i	Input capacitance		V_I = 0,	f = 1 MHz		15	25	pF

ELECTRICAL CHARACTERISTICS

over recommended operating conditions (unless otherwise noted)

PARAMETER		TEST FIGURE	TEST CONDITIONS		ULQ2003A			ULQ2004A			UNIT
					MIN	TYP	MAX	MIN	TYP	MAX	
$V_{I(on)}$	On-state input voltage	Figure 6	V_{CE} = 2 V	I_C = 125 mA						5	V
				I_C = 200 mA			2.7			6	
				I_C = 250 mA			2.9				
				I_C = 275 mA						7	
				I_C = 300 mA			3				
				I_C = 350 mA						8	
$V_{CE(sat)}$	Collector-emitter saturation voltage	Figure 5	I_I = 250 μA,	I_C = 100 mA		0.9	1.2		0.9	1.1	V
			I_I = 350 μA,	I_C = 200 mA		1	1.4		1	1.3	
			I_I = 500 μA,	I_C = 350 mA		1.2	1.7		1.2	1.6	
I_{CEX}	Collector cutoff current	Figure 1	V_{CE} = 50 V,	I_I = 0			100			50	μA
		Figure 2	V_{CE} = 50 V, T_A = 70°C	I_I = 0						100	
				V_I = 6 V						500	
V_F	Clamp forward voltage	Figure 8	I_F = 350 mA			1.7	2.3		1.7	2	V
$I_{I(off)}$	Off-state input current	Figure 3	V_{CE} = 50 V, T_A = 70°C,	I_C = 500 μA		65		50	65		μA
I_I	Input current	Figure 4	V_I = 17 V			0.93	1.35				mA
									0.35	0.5	
									1	1.45	
I_R	Clamp reverse current	Figure 7	V_R = 50 V	T_A = 25°C			100			50	μA
							100			100	
C_i	Input capacitance		V_I = 0,	f = 1 MHz		15	25		15	25	pF

Copyright © 1976–2010, Texas Instruments Incorporated

SWITCHING CHARACTERISTICS

T_A = 25°C

PARAMETER		TEST CONDITIONS	ULN2002A, ULN2003A, ULN2004A			UNIT
			MIN	TYP	MAX	
t_{PLH}	Propagation delay time, low- to high-level output	See Figure 9		0.25	1	µs
t_{PHL}	Propagation delay time, high- to low-level output	See Figure 9		0.25	1	µs
V_{OH}	High-level output voltage after switching	V_S = 50 V, I_O = 300 mA, See Figure 10	V_S – 20			mV

SWITCHING CHARACTERISTICS

T_A = 25°C

PARAMETER		TEST CONDITIONS	ULN2003AI			UNIT
			MIN	TYP	MAX	
t_{PLH}	Propagation delay time, low- to high-level output	See Figure 9		0.25	1	µs
t_{PHL}	Propagation delay time, high- to low-level output	See Figure 9		0.25	1	µs
V_{OH}	High-level output voltage after switching	V_S = 50 V, I_O ≈ 300 mA, See Figure 10	V_S – 20			mV

SWITCHING CHARACTERISTICS

T_A = –40°C to 105°C

PARAMETER		TEST CONDITIONS	ULN2003AI			UNIT
			MIN	TYP	MAX	
t_{PLH}	Propagation delay time, low- to high-level output	See Figure 9		1	10	µs
t_{PHL}	Propagation delay time, high- to low-level output	See Figure 9		1	10	µs
V_{OH}	High-level output voltage after switching	V_S = 50 V, I_O ≈ 300 mA, See Figure 10	V_S – 50			mV

SWITCHING CHARACTERISTICS

over recommended operating conditions (unless otherwise noted)

PARAMETER		TEST CONDITIONS	ULQ2003A, ULQ2004A			UNIT
			MIN	TYP	MAX	
t_{PLH}	Propagation delay time, low- to high-level output	See Figure 9		1	10	µs
t_{PHL}	Propagation delay time, high- to low-level output	See Figure 9		1	10	µs
V_{OH}	High-level output voltage after switching	V_S = 50 V, I_O = 300 mA, See Figure 10	V_S – 20			mV

Copyright © 1976–2010, Texas Instruments Incorporated

PARAMETER MEASUREMENT INFORMATION

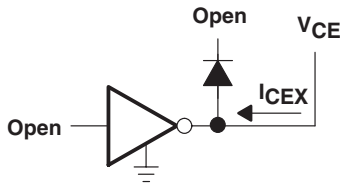

Figure 1. I_{CEX} Test Circuit

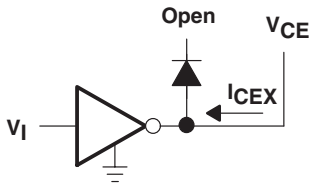

Figure 2. I_{CEX} Test Circuit

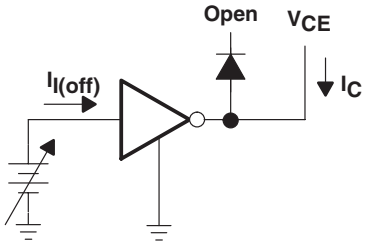

Figure 3. $I_{I(off)}$ Test Circuit

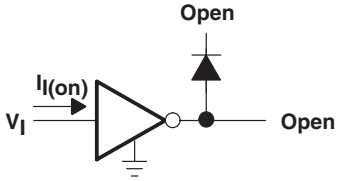

Figure 4. I_I Test Circuit

A. I_I is fixed for measuring $V_{CE(sat)}$, variable for measuring h_{FE}.

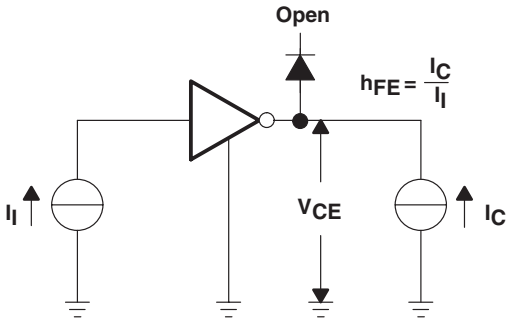

Figure 5. h_{FE}, $V_{CE(sat)}$ Test Circuit

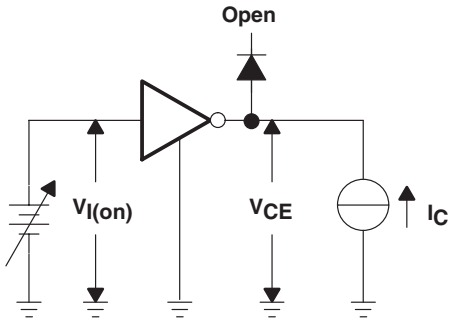

Figure 6. $V_{I(on)}$ Test Circuit

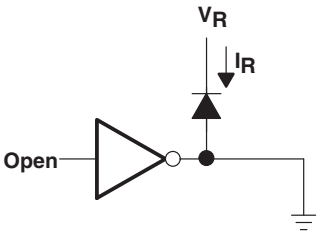

Figure 7. I_R Test Circuit

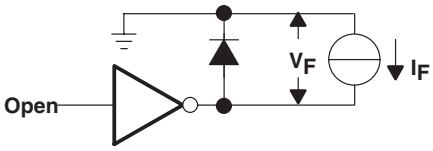

Figure 8. V_F Test Circuit

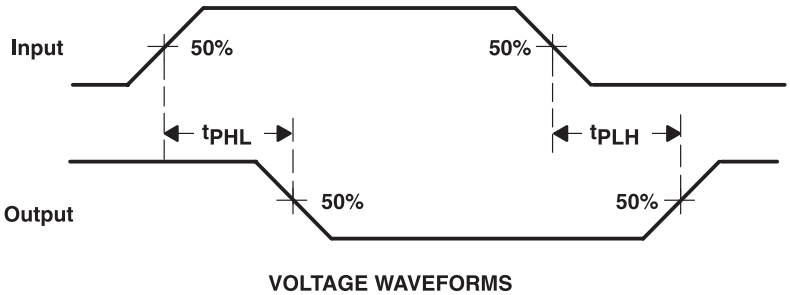

Figure 9. Propagation Delay-Time Waveforms

Copyright © 1976–2010, Texas Instruments Incorporated

PARAMETER MEASUREMENT INFORMATION (continued)

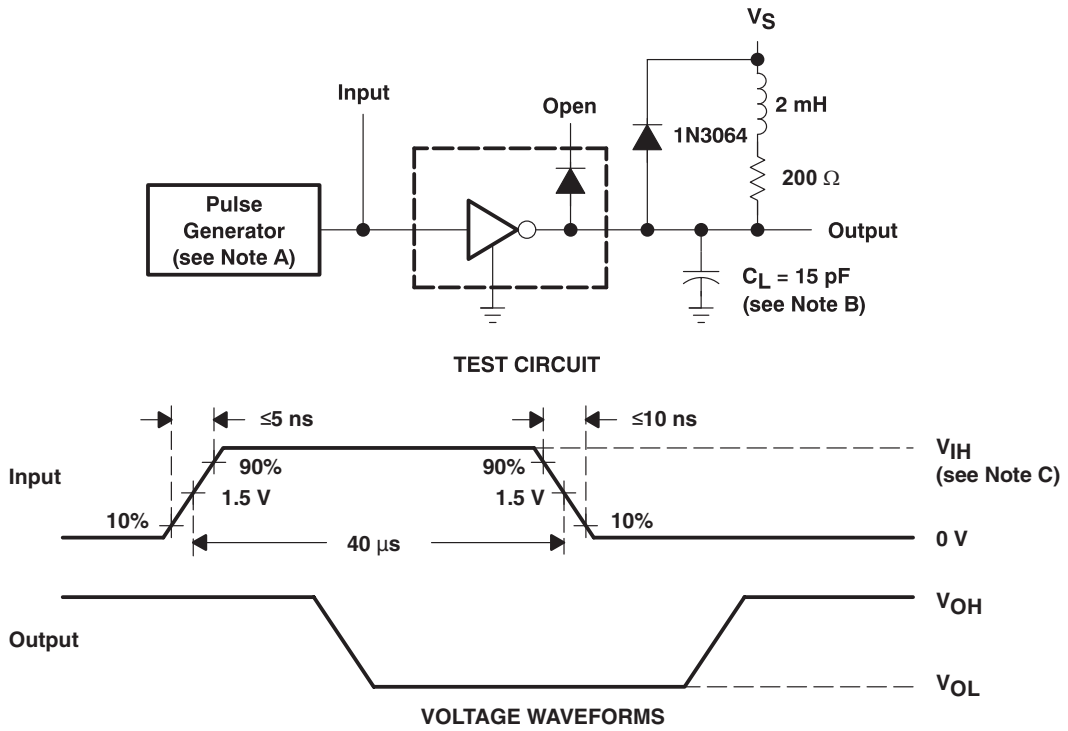

A. The pulse generator has the following characteristics: PRR = 12.5 kHz, Z_O = 50 Ω.

B. C_L includes probe and jig capacitance.

C. For testing the ULN2003A, ULN2003AI, and ULQ2003A, V_{IH} = 3 V; for the ULN2002A, V_{IH} = 13 V; for the ULN2004A and the ULQ2004A, V_{IH} = 8 V.

Figure 10. Latch-Up Test Circuit and Voltage Waveforms

TYPICAL CHARACTERISTICS

COLLECTOR-EMITTER SATURATION VOLTAGE vs COLLECTOR CURRENT (ONE DARLINGTON)

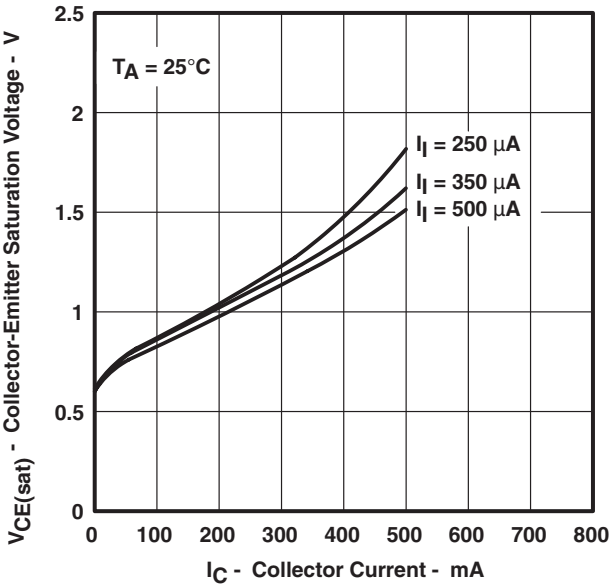

Figure 11.

COLLECTOR-EMITTER SATURATION VOLTAGE vs TOTAL COLLECTOR CURRENT (TWO DARLINGTONS IN PARALLEL)

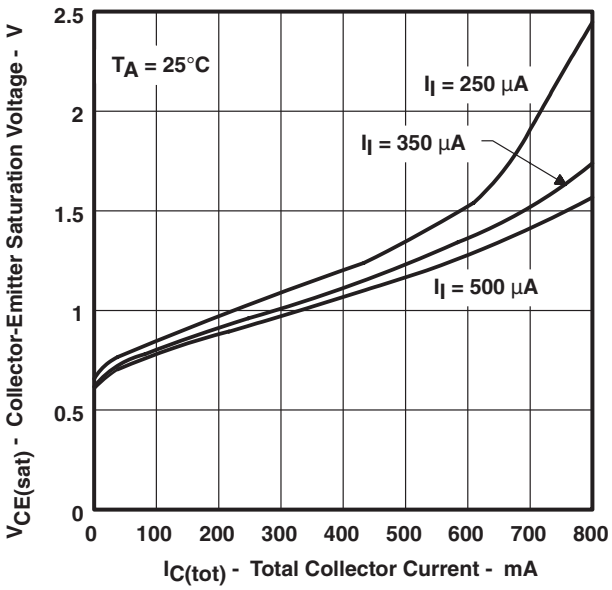

Figure 12.

COLLECTOR CURRENT vs INPUT CURRENT

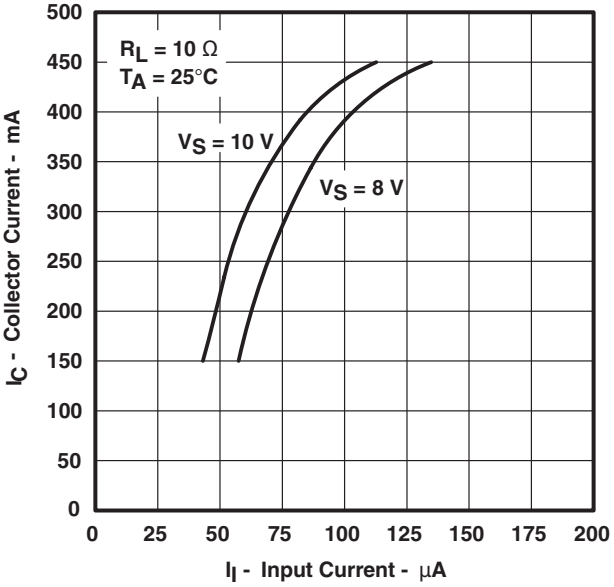

Figure 13.

D PACKAGE MAXIMUM COLLECTOR CURRENT vs DUTY CYCLE

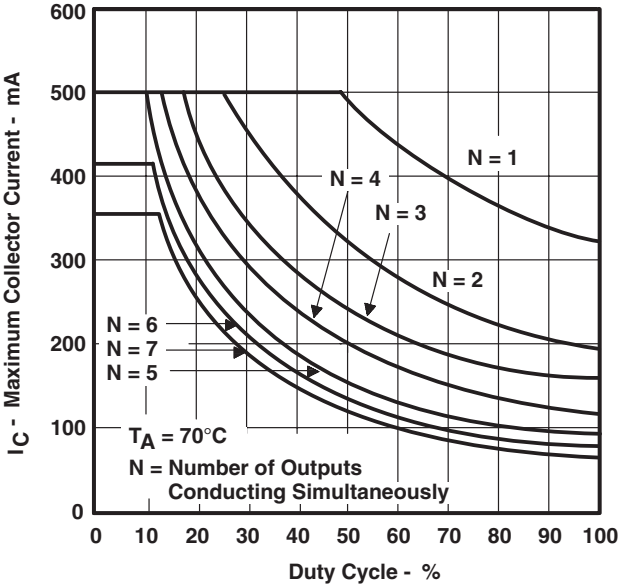

Figure 14.

Copyright © 1976–2010, Texas Instruments Incorporated

TYPICAL CHARACTERISTICS (continued)

N PACKAGE
MAXIMUM COLLECTOR CURRENT
vs
DUTY CYCLE

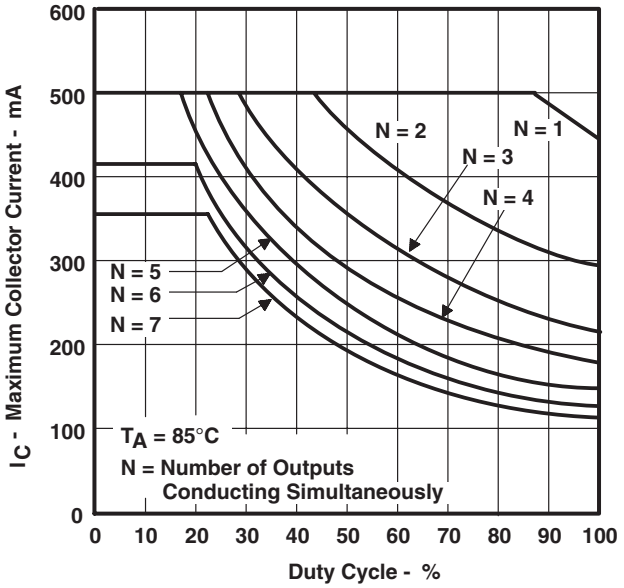

Figure 15.

MAXIMUM AND TYPICAL INPUT CURRENT
vs
INPUT VOLTAGE

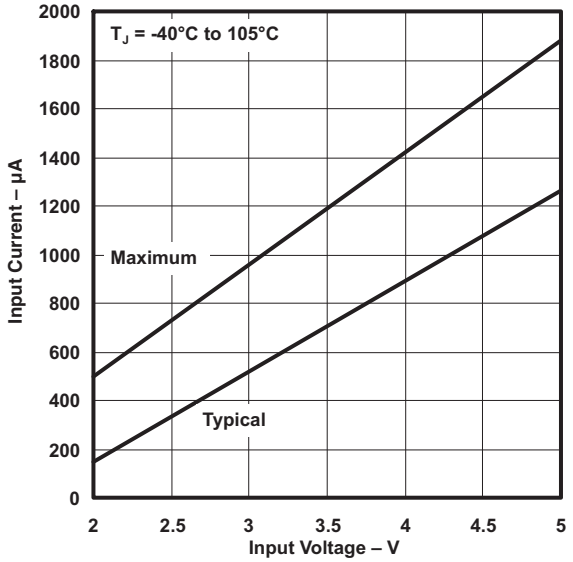

Figure 16.

MAXIMUM AND TYPICAL SATURATED V_{CE}
vs
OUTPUT CURRENT

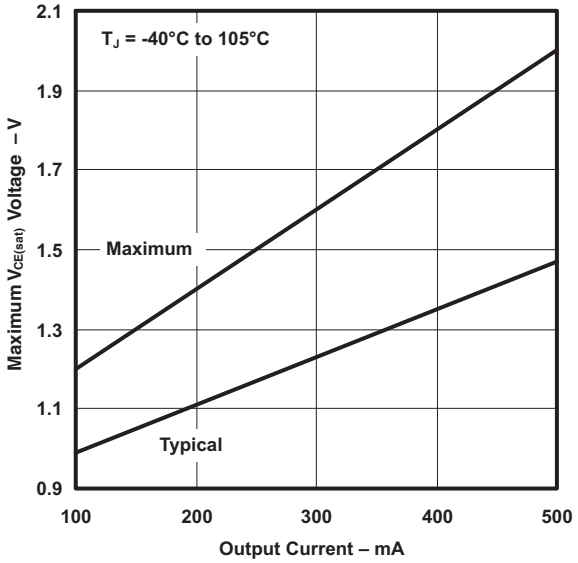

Figure 17.

MINIMUM OUTPUT CURRENT
vs
INPUT CURRENT

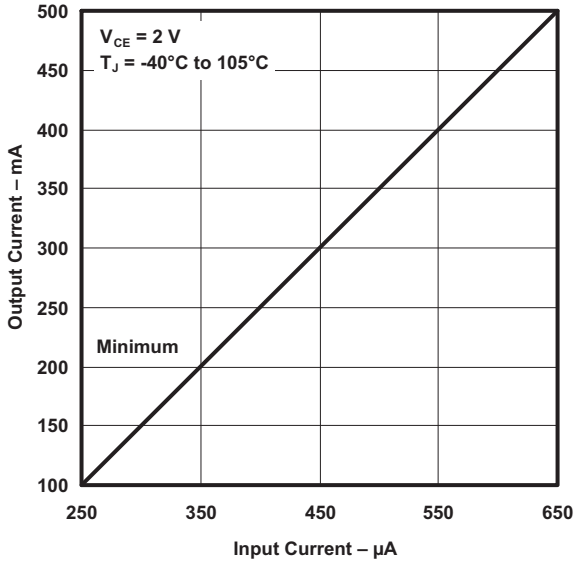

Figure 18.

APPLICATION INFORMATION

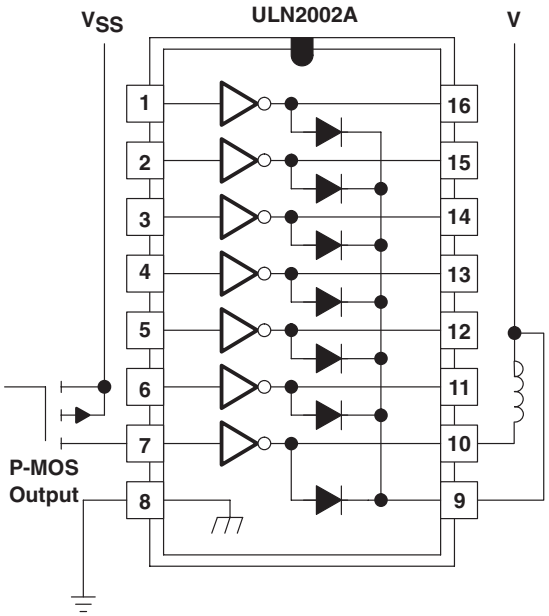

Figure 19. P-MOS to Load

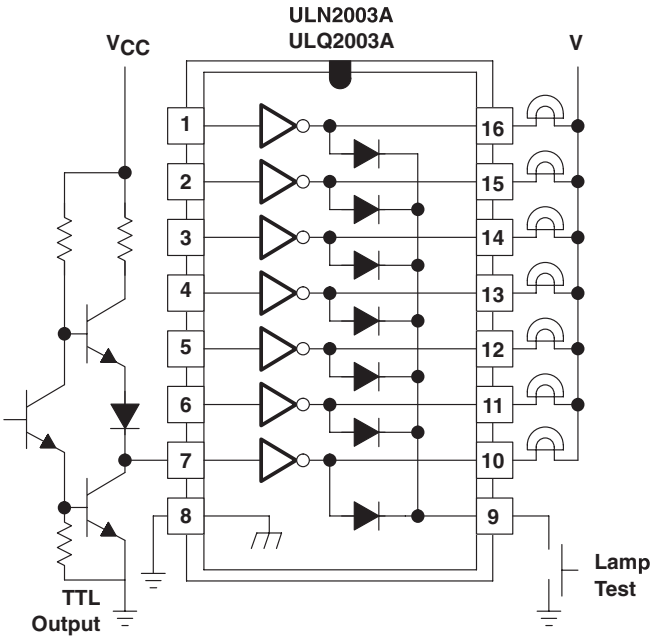

Figure 20. TTL to Load

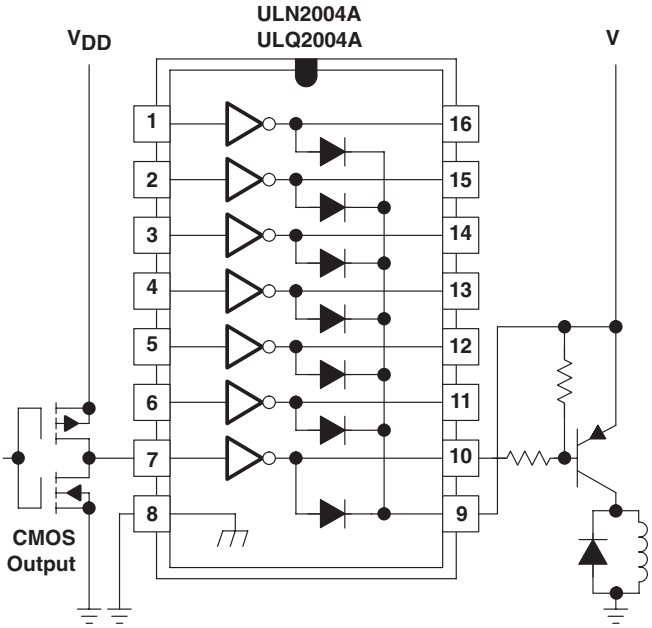

Figure 21. Buffer for Higher Current Loads

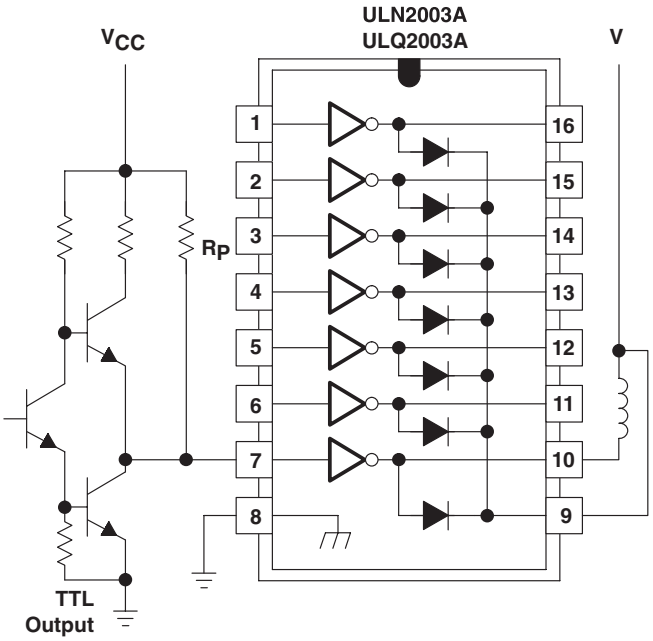

Figure 22. Use of Pullup Resistors to Increase Drive Current

Copyright © 1976–2010, Texas Instruments Incorporated

PACKAGING INFORMATION

Orderable Device	Status (1)	Package Type	Package Drawing	Pins	Package Qty	Eco Plan (2)	Lead/ Ball Finish	MSL Peak Temp (3)	Samples (Requires Login)
ULN2001AD	OBSOLETE	SOIC	D	16		TBD	Call TI	Call TI	Samples Not Available
ULN2001ADR	OBSOLETE	SOIC	D	16		TBD	Call TI	Call TI	Samples Not Available
ULN2001AN	OBSOLETE	PDIP	N	16		TBD	Call TI	Call TI	Samples Not Available
ULN2002AD	OBSOLETE	SOIC	D	16		TBD	Call TI	Call TI	Samples Not Available
ULN2002AN	ACTIVE	PDIP	N	16	25	Pb-Free (RoHS)	CU NIPDAU	N / A for Pkg Type	Purchase Samples
ULN2002ANE4	ACTIVE	PDIP	N	16	25	Pb-Free (RoHS)	CU NIPDAU	N / A for Pkg Type	Purchase Samples
ULN2003AD	ACTIVE	SOIC	D	16	40	Green (RoHS & no Sb/Br)	CU NIPDAU	Level-1-260C-UNLIM	Purchase Samples
ULN2003ADE4	ACTIVE	SOIC	D	16	40	Green (RoHS & no Sb/Br)	CU NIPDAU	Level-1-260C-UNLIM	Purchase Samples
ULN2003ADG4	ACTIVE	SOIC	D	16	40	Green (RoHS & no Sb/Br)	CU NIPDAU	Level-1-260C-UNLIM	Purchase Samples
ULN2003ADR	ACTIVE	SOIC	D	16	2500	Green (RoHS & no Sb/Br)	CU NIPDAU	Level-1-260C-UNLIM	Contact TI Distributor or Sales Office
ULN2003ADRE4	ACTIVE	SOIC	D	16	2500	Green (RoHS & no Sb/Br)	CU NIPDAU	Level-1-260C-UNLIM	Contact TI Distributor or Sales Office
ULN2003ADRG3	ACTIVE	SOIC	D	16	2500	Green (RoHS & no Sb/Br)	CU SN	Level-1-260C-UNLIM	Request Free Samples
ULN2003ADRG4	ACTIVE	SOIC	D	16	2500	Green (RoHS & no Sb/Br)	CU NIPDAU	Level-1-260C-UNLIM	Contact TI Distributor or Sales Office
ULN2003AID	ACTIVE	SOIC	D	16	40	Green (RoHS & no Sb/Br)	CU NIPDAU	Level-1-260C-UNLIM	Contact TI Distributor or Sales Office
ULN2003AIDE4	ACTIVE	SOIC	D	16	40	Green (RoHS & no Sb/Br)	CU NIPDAU	Level-1-260C-UNLIM	Contact TI Distributor or Sales Office
ULN2003AIDG4	ACTIVE	SOIC	D	16	40	Green (RoHS & no Sb/Br)	CU NIPDAU	Level-1-260C-UNLIM	Contact TI Distributor or Sales Office
ULN2003AIDR	ACTIVE	SOIC	D	16	2500	Green (RoHS & no Sb/Br)	CU NIPDAU	Level-1-260C-UNLIM	Request Free Samples
ULN2003AIDRE4	ACTIVE	SOIC	D	16	2500	Green (RoHS & no Sb/Br)	CU NIPDAU	Level-1-260C-UNLIM	Request Free Samples
ULN2003AIDRG4	ACTIVE	SOIC	D	16	2500	Green (RoHS & no Sb/Br)	CU NIPDAU	Level-1-260C-UNLIM	Request Free Samples

Orderable Device	Status (1)	Package Type	Package Drawing	Pins	Package Qty	Eco Plan (2)	Lead/ Ball Finish	MSL Peak Temp (3)	Samples (Requires Login)
ULN2003AIN	ACTIVE	PDIP	N	16	25	Pb-Free (RoHS)	CU NIPDAU	N / A for Pkg Type	Contact TI Distributor or Sales Office
ULN2003AINE4	ACTIVE	PDIP	N	16	25	Pb-Free (RoHS)	CU NIPDAU	N / A for Pkg Type	Contact TI Distributor or Sales Office
ULN2003AIPW	ACTIVE	TSSOP	PW	16	90	Green (RoHS & no Sb/Br)	CU NIPDAU	Level-1-260C-UNLIM	Purchase Samples
ULN2003AIPWE4	ACTIVE	TSSOP	PW	16	90	Green (RoHS & no Sb/Br)	CU NIPDAU	Level-1-260C-UNLIM	Purchase Samples
ULN2003AIPWG4	ACTIVE	TSSOP	PW	16	90	Green (RoHS & no Sb/Br)	CU NIPDAU	Level-1-260C-UNLIM	Purchase Samples
ULN2003AIPWR	ACTIVE	TSSOP	PW	16	2000	Green (RoHS & no Sb/Br)	CU NIPDAU	Level-1-260C-UNLIM	Request Free Samples
ULN2003AIPWRE4	ACTIVE	TSSOP	PW	16	2000	Green (RoHS & no Sb/Br)	CU NIPDAU	Level-1-260C-UNLIM	Request Free Samples
ULN2003AIPWRG4	ACTIVE	TSSOP	PW	16	2000	Green (RoHS & no Sb/Br)	CU NIPDAU	Level-1-260C-UNLIM	Request Free Samples
ULN2003AJ	OBSOLETE	CDIP	J	16		TBD	Call TI	Call TI	Samples Not Available
ULN2003AN	ACTIVE	PDIP	N	16	25	Pb-Free (RoHS)	CU NIPDAU	N / A for Pkg Type	Contact TI Distributor or Sales Office
ULN2003ANE3	PREVIEW	PDIP	N	16	25	TBD	Call TI	Call TI	Samples Not Available
ULN2003ANE4	ACTIVE	PDIP	N	16	25	Pb-Free (RoHS)	CU NIPDAU	N / A for Pkg Type	Contact TI Distributor or Sales Office
ULN2003ANSR	ACTIVE	SO	NS	16	2000	Green (RoHS & no Sb/Br)	CU NIPDAU	Level-1-260C-UNLIM	Purchase Samples
ULN2003ANSRE4	ACTIVE	SO	NS	16	2000	Green (RoHS & no Sb/Br)	CU NIPDAU	Level-1-260C-UNLIM	Purchase Samples
ULN2003ANSRG4	ACTIVE	SO	NS	16	2000	Green (RoHS & no Sb/Br)	CU NIPDAU	Level-1-260C-UNLIM	Purchase Samples
ULN2003APW	ACTIVE	TSSOP	PW	16	90	Green (RoHS & no Sb/Br)	CU NIPDAU	Level-1-260C-UNLIM	Purchase Samples
ULN2003APWE4	ACTIVE	TSSOP	PW	16	90	Green (RoHS & no Sb/Br)	CU NIPDAU	Level-1-260C-UNLIM	Purchase Samples
ULN2003APWG4	ACTIVE	TSSOP	PW	16	90	Green (RoHS & no Sb/Br)	CU NIPDAU	Level-1-260C-UNLIM	Purchase Samples
ULN2003APWR	ACTIVE	TSSOP	PW	16	2000	Green (RoHS & no Sb/Br)	CU NIPDAU	Level-1-260C-UNLIM	Purchase Samples

Orderable Device	Status (1)	Package Type	Package Drawing	Pins	Package Qty	Eco Plan (2)	Lead/ Ball Finish	MSL Peak Temp (3)	Samples (Requires Login)
ULN2003APWRE4	ACTIVE	TSSOP	PW	16	2000	Green (RoHS & no Sb/Br)	CU NIPDAU	Level-1-260C-UNLIM	Purchase Samples
ULN2003APWRG4	ACTIVE	TSSOP	PW	16	2000	Green (RoHS & no Sb/Br)	CU NIPDAU	Level-1-260C-UNLIM	Purchase Samples
ULN2004AD	ACTIVE	SOIC	D	16	40	Green (RoHS & no Sb/Br)	CU NIPDAU	Level-1-260C-UNLIM	Purchase Samples
ULN2004ADE4	ACTIVE	SOIC	D	16	40	Green (RoHS & no Sb/Br)	CU NIPDAU	Level-1-260C-UNLIM	Purchase Samples
ULN2004ADG4	ACTIVE	SOIC	D	16	40	Green (RoHS & no Sb/Br)	CU NIPDAU	Level-1-260C-UNLIM	Purchase Samples
ULN2004ADR	ACTIVE	SOIC	D	16	2500	Green (RoHS & no Sb/Br)	CU NIPDAU	Level-1-260C-UNLIM	Contact TI Distributor or Sales Office
ULN2004ADRE4	ACTIVE	SOIC	D	16	2500	Green (RoHS & no Sb/Br)	CU NIPDAU	Level-1-260C-UNLIM	Contact TI Distributor or Sales Office
ULN2004ADRG4	ACTIVE	SOIC	D	16	2500	Green (RoHS & no Sb/Br)	CU NIPDAU	Level-1-260C-UNLIM	Contact TI Distributor or Sales Office
ULN2004AN	ACTIVE	PDIP	N	16	25	Pb-Free (RoHS)	CU NIPDAU	N / A for Pkg Type	Contact TI Distributor or Sales Office
ULN2004ANE4	ACTIVE	PDIP	N	16	25	Pb-Free (RoHS)	CU NIPDAU	N / A for Pkg Type	Contact TI Distributor or Sales Office
ULN2004ANSR	ACTIVE	SO	NS	16	2000	Green (RoHS & no Sb/Br)	CU NIPDAU	Level-1-260C-UNLIM	Purchase Samples
ULN2004ANSRG4	ACTIVE	SO	NS	16	2000	Green (RoHS & no Sb/Br)	CU NIPDAU	Level-1-260C-UNLIM	Purchase Samples
ULQ2003AD	ACTIVE	SOIC	D	16	40	Green (RoHS & no Sb/Br)	CU NIPDAU	Level-1-260C-UNLIM	Purchase Samples
ULQ2003ADG4	ACTIVE	SOIC	D	16	40	Green (RoHS & no Sb/Br)	CU NIPDAU	Level-1-260C-UNLIM	Request Free Samples
ULQ2003ADR	ACTIVE	SOIC	D	16	2500	Green (RoHS & no Sb/Br)	CU NIPDAU	Level-1-260C-UNLIM	Purchase Samples
ULQ2003ADRG4	ACTIVE	SOIC	D	16	2500	Green (RoHS & no Sb/Br)	CU NIPDAU	Level-1-260C-UNLIM	Purchase Samples
ULQ2003AN	ACTIVE	PDIP	N	16	25	Pb-Free (RoHS)	CU NIPDAU	N / A for Pkg Type	Request Free Samples
ULQ2004AD	ACTIVE	SOIC	D	16	40	Green (RoHS & no Sb/Br)	CU NIPDAU	Level-1-260C-UNLIM	Purchase Samples

Orderable Device	Status (1)	Package Type	Package Drawing	Pins	Package Qty	Eco Plan (2)	Lead/ Ball Finish	MSL Peak Temp (3)	Samples (Requires Login)
ULQ2004ADG4	ACTIVE	SOIC	D	16	40	Green (RoHS & no Sb/Br)	CU NIPDAU	Level-1-260C-UNLIM	Purchase Samples
ULQ2004ADR	ACTIVE	SOIC	D	16	2500	Green (RoHS & no Sb/Br)	CU NIPDAU	Level-1-260C-UNLIM	Purchase Samples
ULQ2004ADRG4	ACTIVE	SOIC	D	16	2500	Green (RoHS & no Sb/Br)	CU NIPDAU	Level-1-260C-UNLIM	Purchase Samples
ULQ2004AN	ACTIVE	PDIP	N	16	25	Pb-Free (RoHS)	CU NIPDAU	N / A for Pkg Type	Request Free Samples

(1) The marketing status values are defined as follows:
ACTIVE: Product device recommended for new designs.
LIFEBUY: TI has announced that the device will be discontinued, and a lifetime-buy period is in effect.
NRND: Not recommended for new designs. Device is in production to support existing customers, but TI does not recommend using this part in a new design.
PREVIEW: Device has been announced but is not in production. Samples may or may not be available.
OBSOLETE: TI has discontinued the production of the device.

(2) Eco Plan - The planned eco-friendly classification: Pb-Free (RoHS), Pb-Free (RoHS Exempt), or Green (RoHS & no Sb/Br) - please check http://www.ti.com/productcontent for the latest availability information and additional product content details.
TBD: The Pb-Free/Green conversion plan has not been defined.
Pb-Free (RoHS): TI's terms "Lead-Free" or "Pb-Free" mean semiconductor products that are compatible with the current RoHS requirements for all 6 substances, including the requirement that lead not exceed 0.1% by weight in homogeneous materials. Where designed to be soldered at high temperatures, TI Pb-Free products are suitable for use in specified lead-free processes.
Pb-Free (RoHS Exempt): This component has a RoHS exemption for either 1) lead-based flip-chip solder bumps used between the die and package, or 2) lead-based die adhesive used between the die and leadframe. The component is otherwise considered Pb-Free (RoHS compatible) as defined above.
Green (RoHS & no Sb/Br): TI defines "Green" to mean Pb-Free (RoHS compatible), and free of Bromine (Br) and Antimony (Sb) based flame retardants (Br or Sb do not exceed 0.1% by weight in homogeneous material)

(3) MSL, Peak Temp. -- The Moisture Sensitivity Level rating according to the JEDEC industry standard classifications, and peak solder temperature.

Important Information and Disclaimer: The information provided on this page represents TI's knowledge and belief as of the date that it is provided. TI bases its knowledge and belief on information provided by third parties, and makes no representation or warranty as to the accuracy of such information. Efforts are underway to better integrate information from third parties. TI has taken and continues to take reasonable steps to provide representative and accurate information but may not have conducted destructive testing or chemical analysis on incoming materials and chemicals. TI and TI suppliers consider certain information to be proprietary, and thus CAS numbers and other limited information may not be available for release.

In no event shall TI's liability arising out of such information exceed the total purchase price of the TI part(s) at issue in this document sold by TI to Customer on an annual basis.

OTHER QUALIFIED VERSIONS OF ULQ2003A, ULQ2004A :

- Automotive: ULQ2003A-Q1, ULQ2004A-Q1

NOTE: Qualified Version Definitions:

- Automotive - Q100 devices qualified for high-reliability automotive applications targeting zero defects

TAPE AND REEL INFORMATION

REEL DIMENSIONS

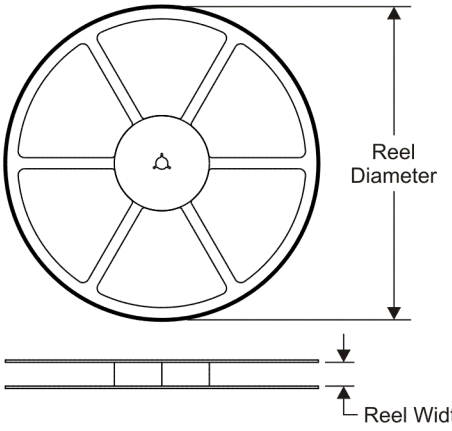

TAPE DIMENSIONS

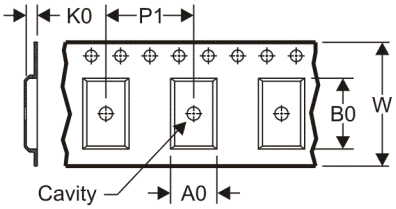

A0	Dimension designed to accommodate the component width
B0	Dimension designed to accommodate the component length
K0	Dimension designed to accommodate the component thickness
W	Overall width of the carrier tape
P1	Pitch between successive cavity centers

QUADRANT ASSIGNMENTS FOR PIN 1 ORIENTATION IN TAPE

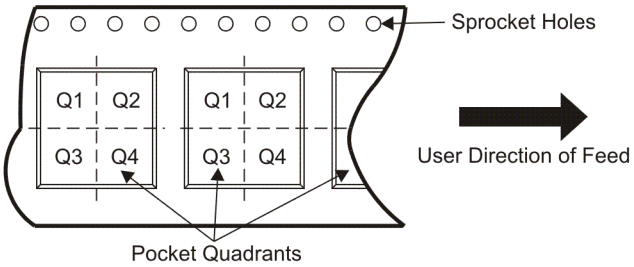

*All dimensions are nominal

Device	Package Type	Package Drawing	Pins	SPQ	Reel Diameter (mm)	Reel Width W1 (mm)	A0 (mm)	B0 (mm)	K0 (mm)	P1 (mm)	W (mm)	Pin1 Quadrant
ULN2003ADR	SOIC	D	16	2500	330.0	16.4	6.5	10.3	2.1	8.0	16.0	Q1
ULN2003ADR	SOIC	D	16	2500	330.0	16.4	6.5	10.3	2.1	8.0	16.0	Q1
ULN2003AIDR	SOIC	D	16	2500	330.0	16.4	6.5	10.3	2.1	8.0	16.0	Q1
ULN2003AIPWR	TSSOP	PW	16	2000	330.0	12.4	6.9	5.6	1.6	8.0	12.0	Q1
ULN2003AIPWR	TSSOP	PW	16	2000	330.0	12.4	7.0	5.6	1.6	8.0	12.0	Q1
ULN2003ANSR	SO	NS	16	2000	330.0	16.4	8.2	10.5	2.5	12.0	16.0	Q1
ULN2003APWR	TSSOP	PW	16	2000	330.0	12.4	6.9	5.6	1.6	8.0	12.0	Q1
ULN2003APWR	TSSOP	PW	16	2000	330.0	12.4	7.0	5.6	1.6	8.0	12.0	Q1
ULN2004ADR	SOIC	D	16	2500	330.0	16.4	6.5	10.3	2.1	8.0	16.0	Q1
ULN2004ADR	SOIC	D	16	2500	330.0	16.4	6.5	10.3	2.1	8.0	16.0	Q1
ULN2004ANSR	SO	NS	16	2000	330.0	16.4	8.2	10.5	2.5	12.0	16.0	Q1
ULQ2003ADR	SOIC	D	16	2500	330.0	16.4	6.5	10.3	2.1	8.0	16.0	Q1

TAPE AND REEL BOX DIMENSIONS

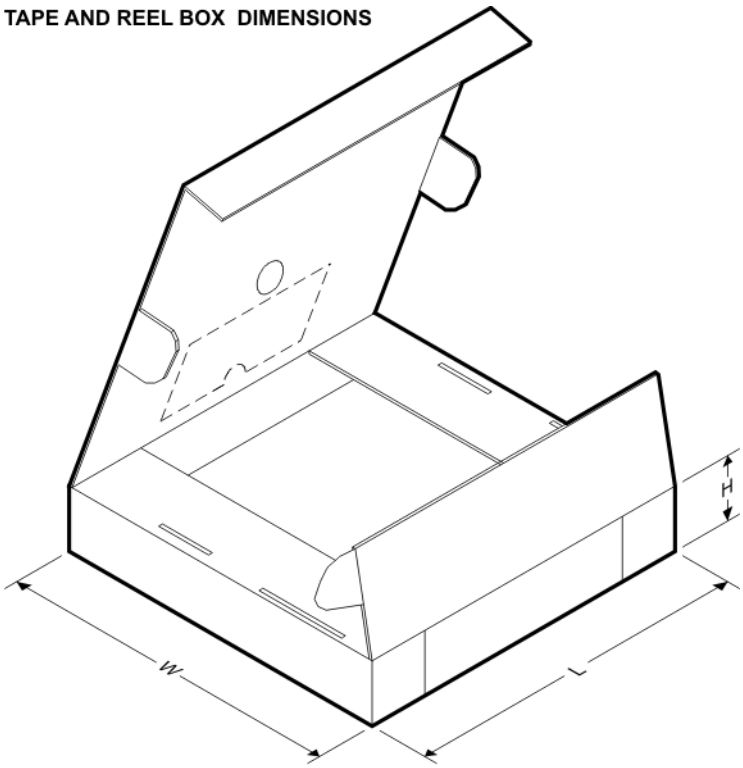

*All dimensions are nominal

Device	Package Type	Package Drawing	Pins	SPQ	Length (mm)	Width (mm)	Height (mm)
ULN2003ADR	SOIC	D	16	2500	333.2	345.9	28.6
ULN2003ADR	SOIC	D	16	2500	346.0	346.0	33.0
ULN2003AIDR	SOIC	D	16	2500	333.2	345.9	28.6
ULN2003AIPWR	TSSOP	PW	16	2000	346.0	346.0	29.0
ULN2003AIPWR	TSSOP	PW	16	2000	364.0	364.0	27.0
ULN2003ANSR	SO	NS	16	2000	346.0	346.0	33.0
ULN2003APWR	TSSOP	PW	16	2000	346.0	346.0	29.0
ULN2003APWR	TSSOP	PW	16	2000	364.0	364.0	27.0
ULN2004ADR	SOIC	D	16	2500	333.2	345.9	28.6
ULN2004ADR	SOIC	D	16	2500	346.0	346.0	33.0
ULN2004ANSR	SO	NS	16	2000	346.0	346.0	33.0
ULQ2003ADR	SOIC	D	16	2500	333.2	345.9	28.6

J (R–GDIP–T**) CERAMIC DUAL IN–LINE PACKAGE

14 LEADS SHOWN

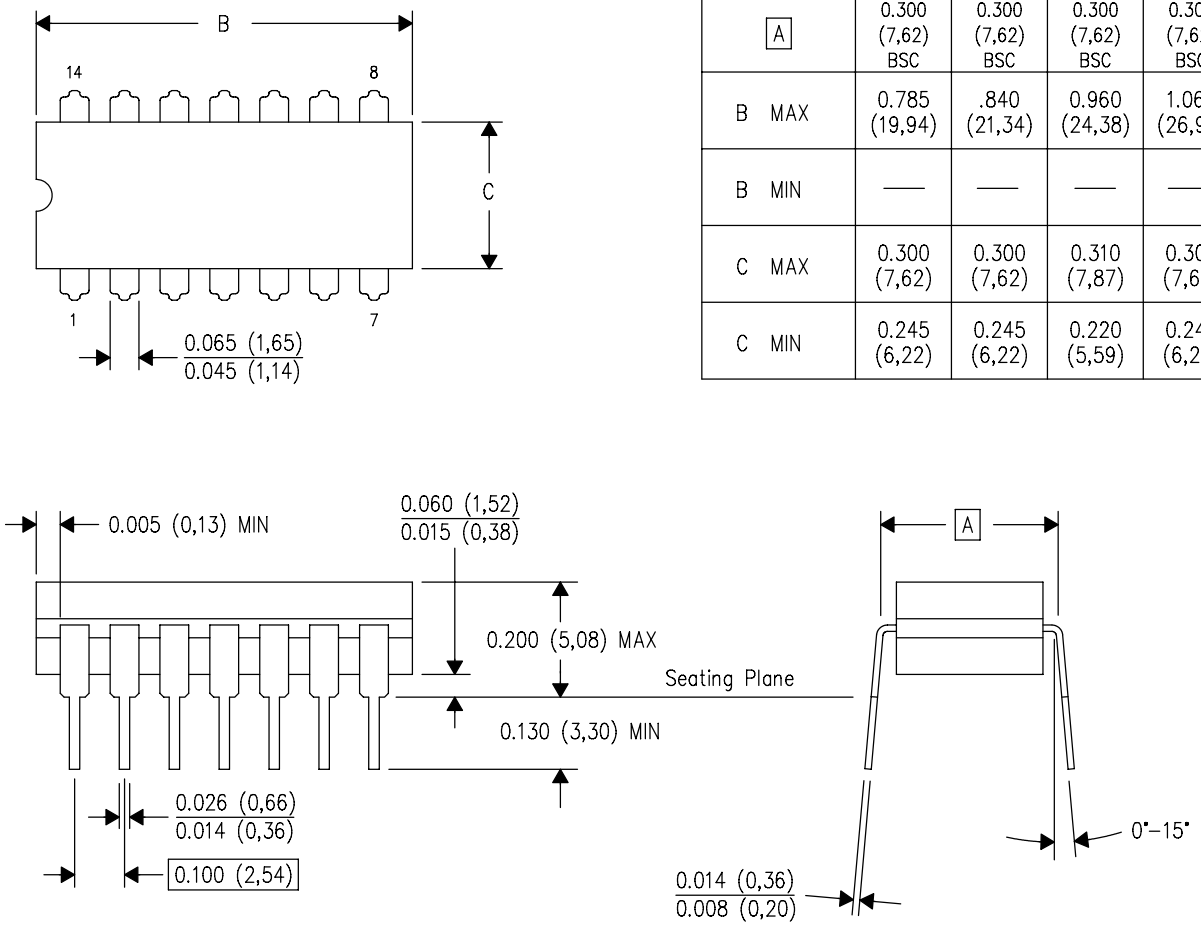

DIM \ PINS **	14	16	18	20
A	0.300 (7,62) BSC	0.300 (7,62) BSC	0.300 (7,62) BSC	0.300 (7,62) BSC
B MAX	0.785 (19,94)	.840 (21,34)	0.960 (24,38)	1.060 (26,92)
B MIN	—	—	—	—
C MAX	0.300 (7,62)	0.300 (7,62)	0.310 (7,87)	0.300 (7,62)
C MIN	0.245 (6,22)	0.245 (6,22)	0.220 (5,59)	0.245 (6,22)

4040083/F 03/03

NOTES:
- A. All linear dimensions are in inches (millimeters).
- B. This drawing is subject to change without notice.
- C. This package is hermetically sealed with a ceramic lid using glass frit.
- D. Index point is provided on cap for terminal identification only on press ceramic glass frit seal only.
- E. Falls within MIL STD 1835 GDIP1–T14, GDIP1–T16, GDIP1–T18 and GDIP1–T20.

N (R–PDIP–T**) PLASTIC DUAL–IN–LINE PACKAGE

16 PINS SHOWN

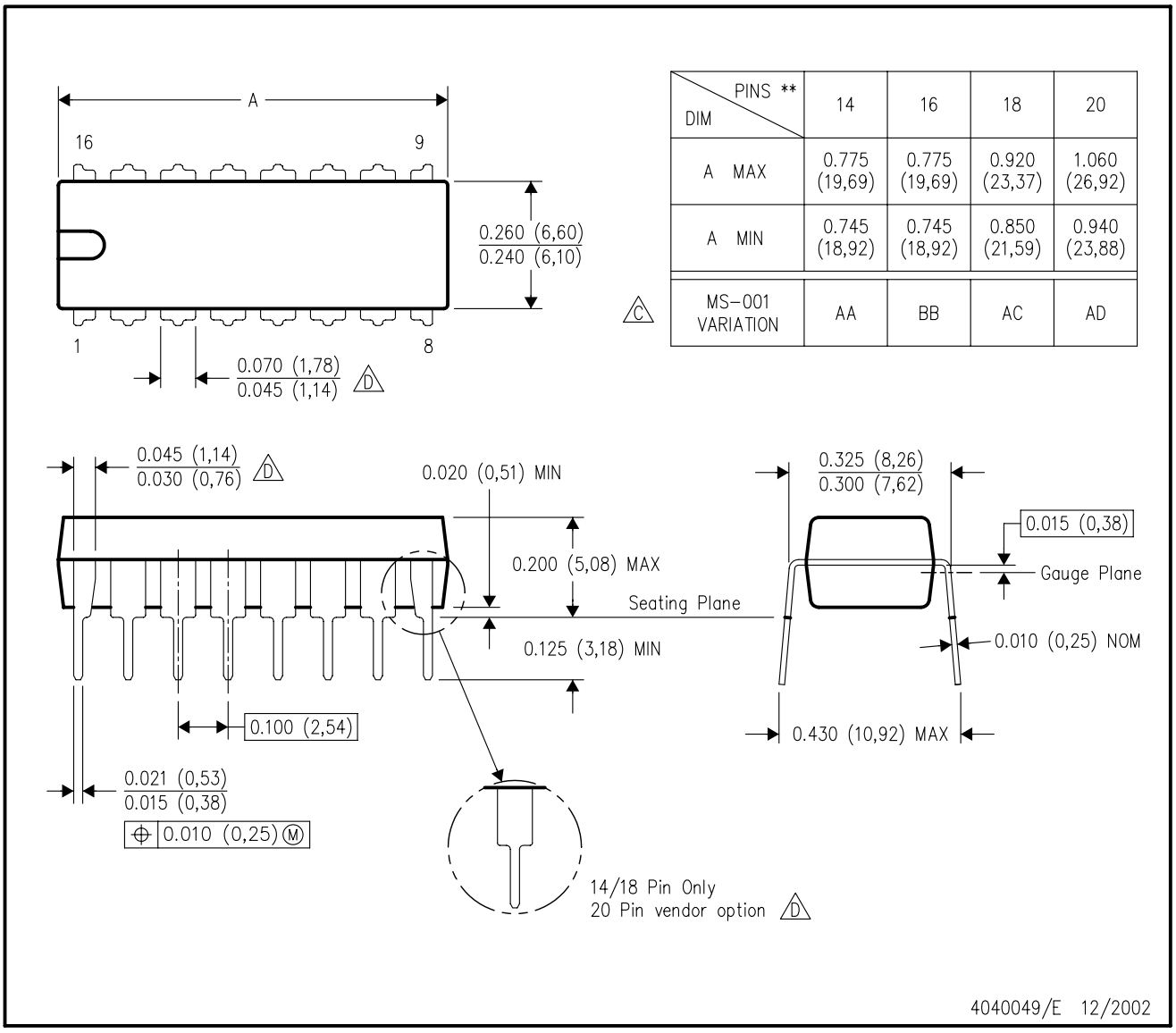

DIM \ PINS **	14	16	18	20
A MAX	0.775 (19,69)	0.775 (19,69)	0.920 (23,37)	1.060 (26,92)
A MIN	0.745 (18,92)	0.745 (18,92)	0.850 (21,59)	0.940 (23,88)
MS–001 VARIATION (C)	AA	BB	AC	AD

NOTES:
A. All linear dimensions are in inches (millimeters).
B. This drawing is subject to change without notice.
C. Falls within JEDEC MS–001, except 18 and 20 pin minimum body length (Dim A).
D. The 20 pin end lead shoulder width is a vendor option, either half or full width.

D (R–PDSO–G16) PLASTIC SMALL OUTLINE

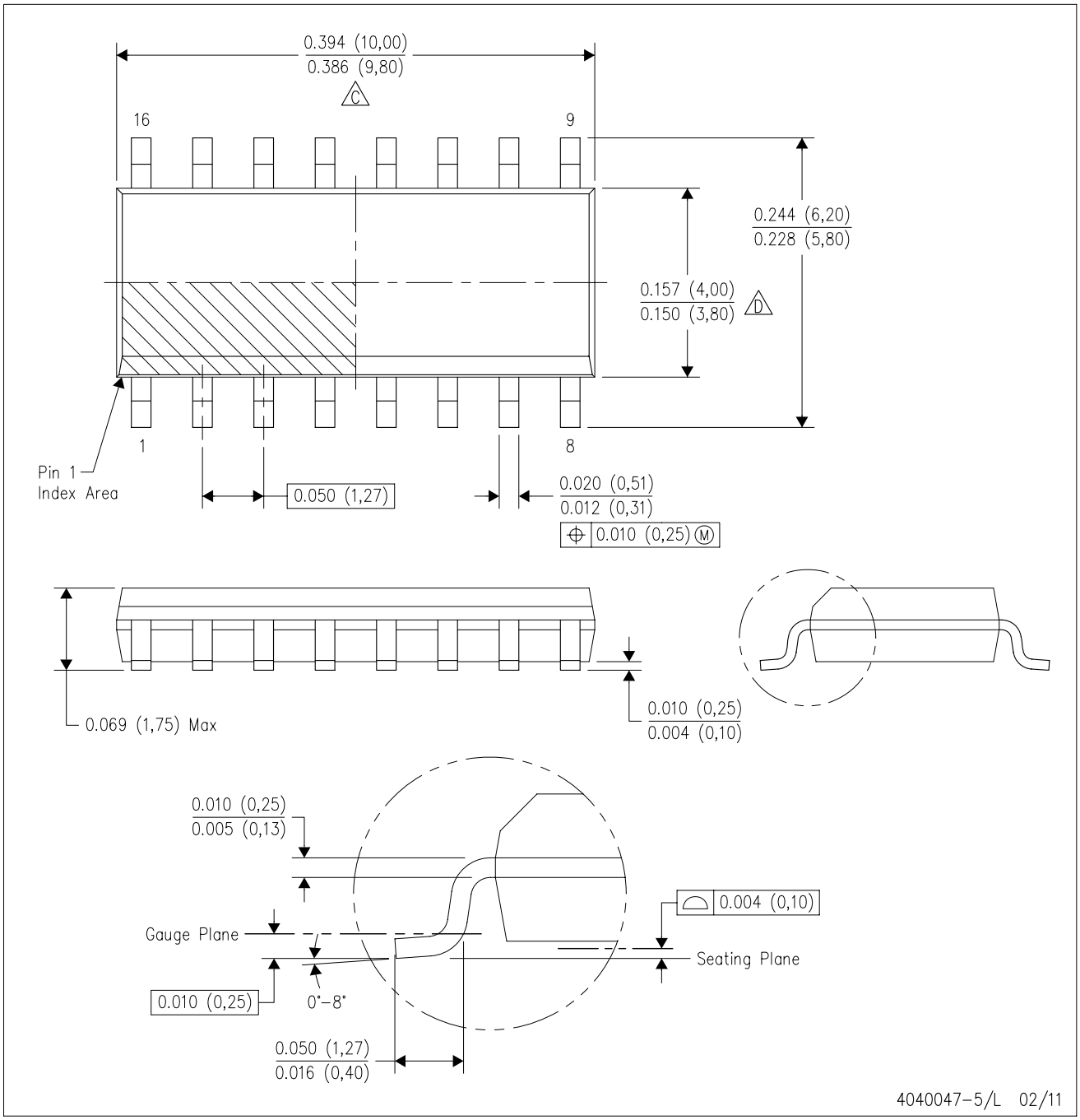

NOTES:
A. All linear dimensions are in inches (millimeters).
B. This drawing is subject to change without notice.
C. Body length does not include mold flash, protrusions, or gate burrs. Mold flash, protrusions, or gate burrs shall not exceed 0.006 (0,15) each side.
D. Body width does not include interlead flash. Interlead flash shall not exceed 0.017 (0,43) each side.
E. Reference JEDEC MS–012 variation AC.

D (R–PDSO–G16) PLASTIC SMALL OUTLINE

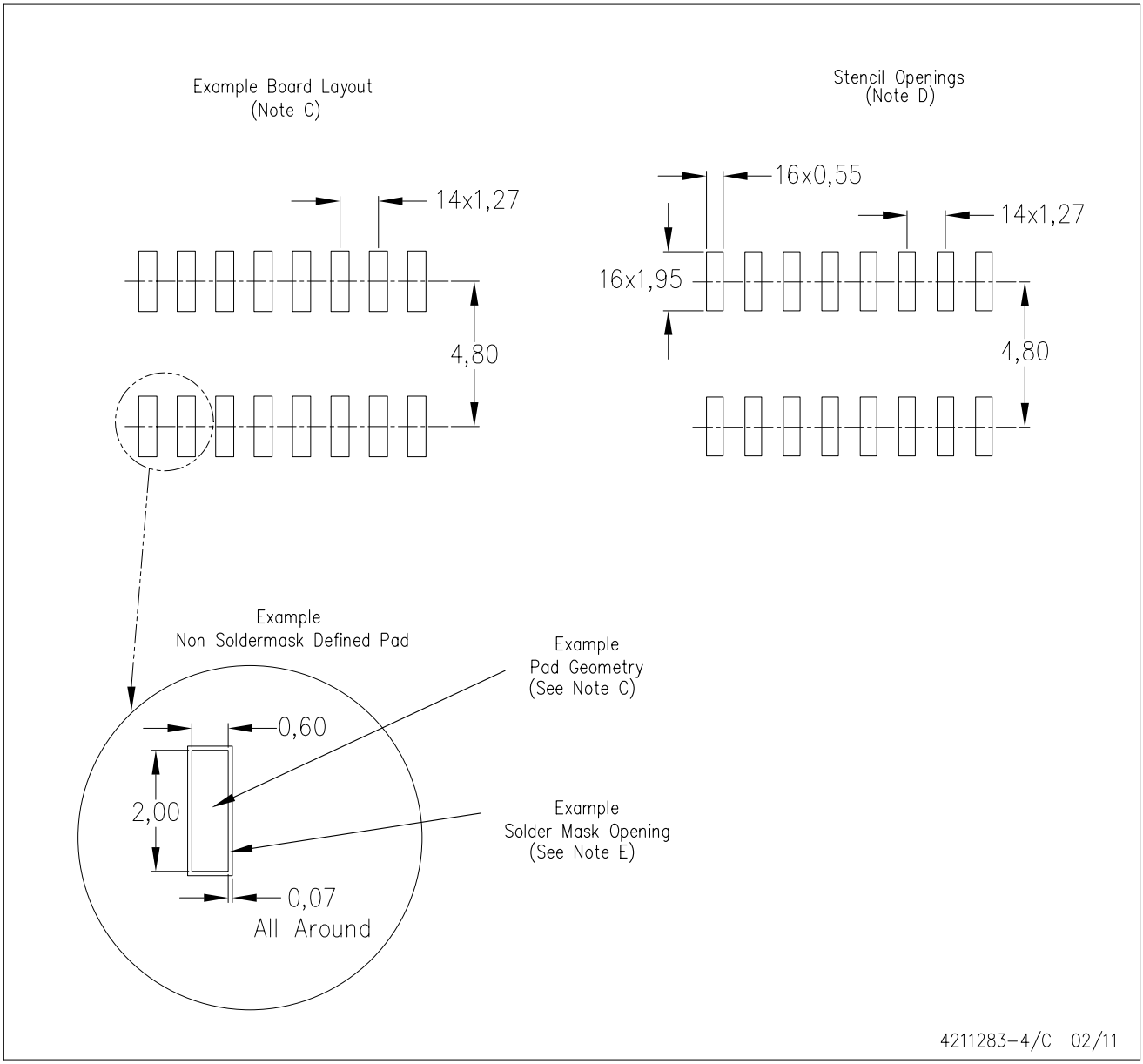

NOTES:
A. All linear dimensions are in millimeters.
B. This drawing is subject to change without notice.
C. Publication IPC–7351 is recommended for alternate designs.
D. Laser cutting apertures with trapezoidal walls and also rounding corners will offer better paste release. Customers should contact their board assembly site for stencil design recommendations. Refer to IPC–7525 for other stencil recommendations.
E. Customers should contact their board fabrication site for solder mask tolerances between and around signal pads.

PW (R–PDSO–G16) PLASTIC SMALL OUTLINE

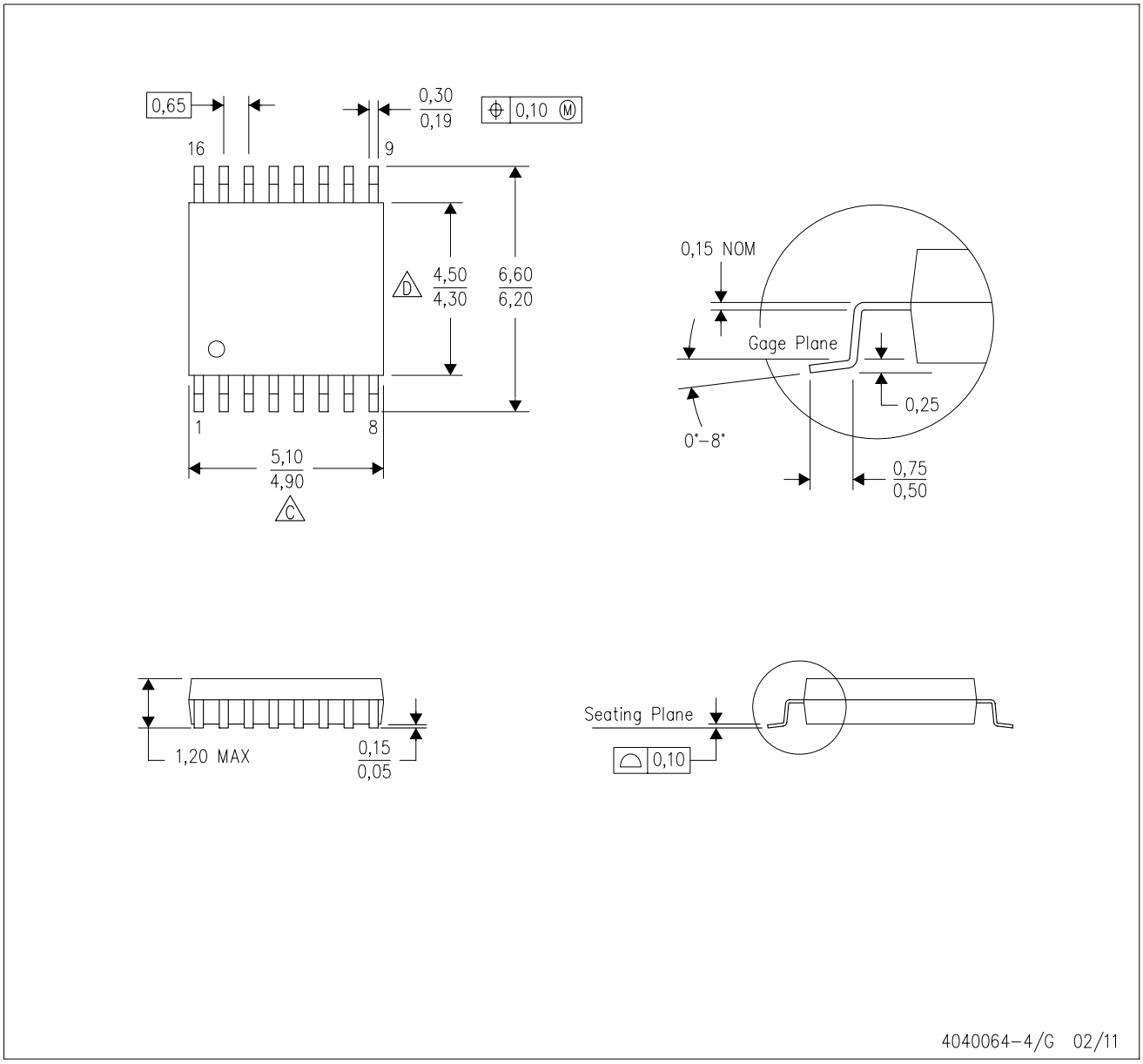

NOTES:
A. All linear dimensions are in millimeters. Dimensioning and tolerancing per ASME Y14.5M–1994.
B. This drawing is subject to change without notice.
C. Body length does not include mold flash, protrusions, or gate burrs. Mold flash, protrusions, or gate burrs shall not exceed 0,15 each side.
D. Body width does not include interlead flash. Interlead flash shall not exceed 0,25 each side.
E. Falls within JEDEC MO–153

PW (R–PDSO–G16) PLASTIC SMALL OUTLINE

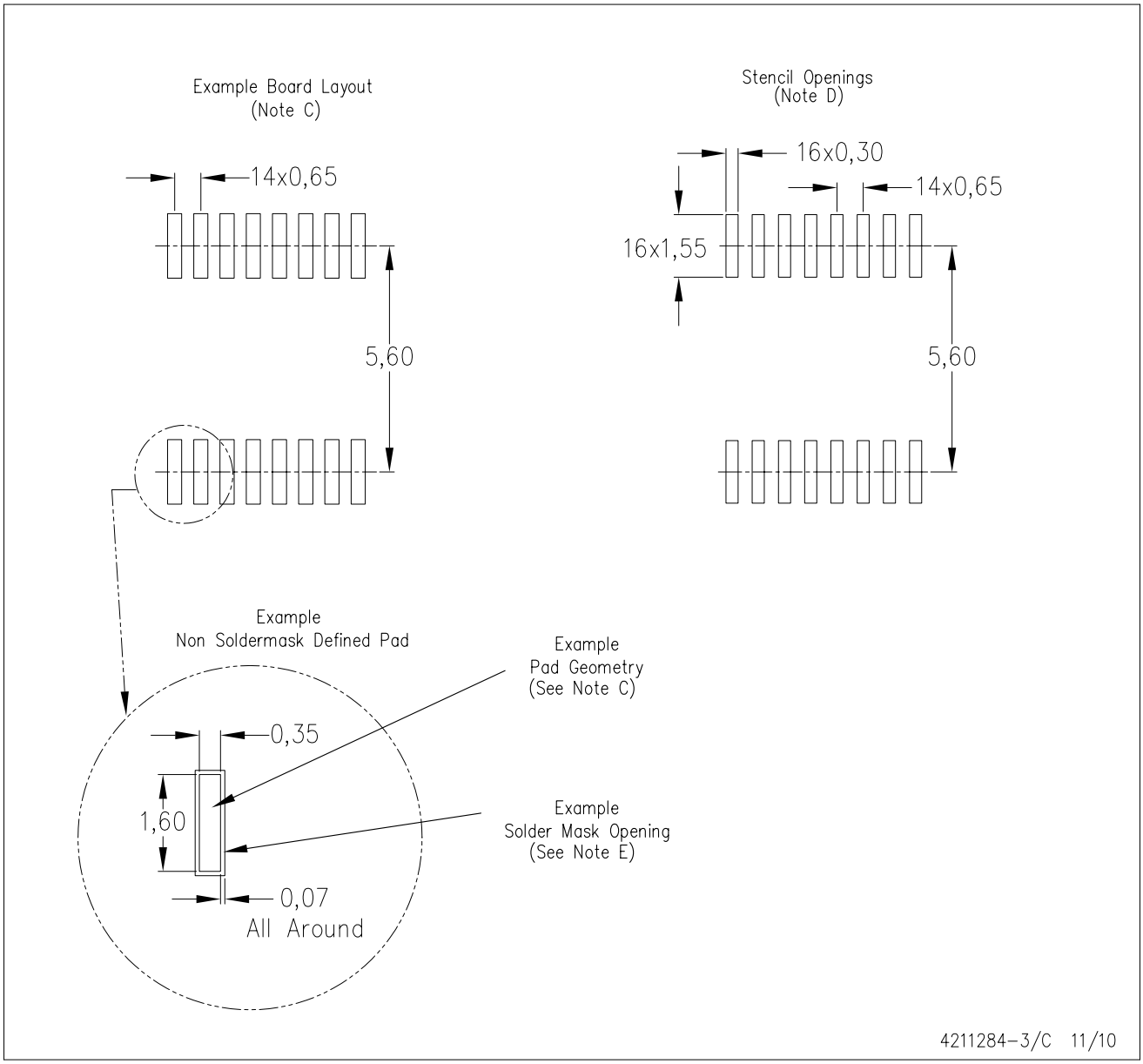

NOTES:
A. All linear dimensions are in millimeters.
B. This drawing is subject to change without notice.
C. Publication IPC–7351 is recommended for alternate designs.
D. Laser cutting apertures with trapezoidal walls and also rounding corners will offer better paste release. Customers should contact their board assembly site for stencil design recommendations. Refer to IPC–7525 for other stencil recommendations.
E. Customers should contact their board fabrication site for solder mask tolerances between and around signal pads.

MECHANICAL DATA

NS (R-PDSO-G)** **PLASTIC SMALL-OUTLINE PACKAGE**

14-PINS SHOWN

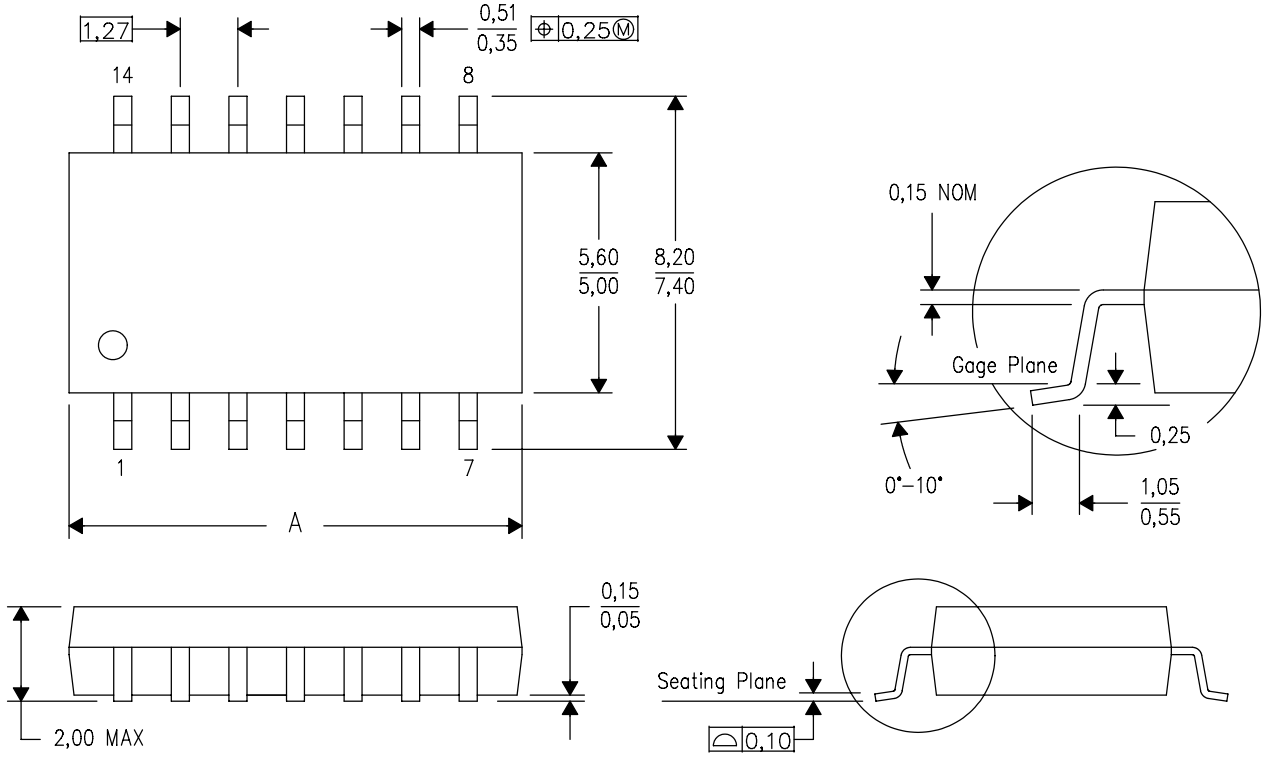

DIM \ PINS **	14	16	20	24
A MAX	10,50	10,50	12,90	15,30
A MIN	9,90	9,90	12,30	14,70

4040062/C 03/03

NOTES:
A. All linear dimensions are in millimeters.
B. This drawing is subject to change without notice.
C. Body dimensions do not include mold flash or protrusion, not to exceed 0,15.

IMPORTANT NOTICE

Texas Instruments Incorporated and its subsidiaries (TI) reserve the right to make corrections, modifications, enhancements, improvements, and other changes to its products and services at any time and to discontinue any product or service without notice. Customers should obtain the latest relevant information before placing orders and should verify that such information is current and complete. All products are sold subject to TI's terms and conditions of sale supplied at the time of order acknowledgment.

TI warrants performance of its hardware products to the specifications applicable at the time of sale in accordance with TI's standard warranty. Testing and other quality control techniques are used to the extent TI deems necessary to support this warranty. Except where mandated by government requirements, testing of all parameters of each product is not necessarily performed.

TI assumes no liability for applications assistance or customer product design. Customers are responsible for their products and applications using TI components. To minimize the risks associated with customer products and applications, customers should provide adequate design and operating safeguards.

TI does not warrant or represent that any license, either express or implied, is granted under any TI patent right, copyright, mask work right, or other TI intellectual property right relating to any combination, machine, or process in which TI products or services are used. Information published by TI regarding third-party products or services does not constitute a license from TI to use such products or services or a warranty or endorsement thereof. Use of such information may require a license from a third party under the patents or other intellectual property of the third party, or a license from TI under the patents or other intellectual property of TI.

Reproduction of TI information in TI data books or data sheets is permissible only if reproduction is without alteration and is accompanied by all associated warranties, conditions, limitations, and notices. Reproduction of this information with alteration is an unfair and deceptive business practice. TI is not responsible or liable for such altered documentation. Information of third parties may be subject to additional restrictions.

Resale of TI products or services with statements different from or beyond the parameters stated by TI for that product or service voids all express and any implied warranties for the associated TI product or service and is an unfair and deceptive business practice. TI is not responsible or liable for any such statements.

TI products are not authorized for use in safety-critical applications (such as life support) where a failure of the TI product would reasonably be expected to cause severe personal injury or death, unless officers of the parties have executed an agreement specifically governing such use. Buyers represent that they have all necessary expertise in the safety and regulatory ramifications of their applications, and acknowledge and agree that they are solely responsible for all legal, regulatory and safety-related requirements concerning their products and any use of TI products in such safety-critical applications, notwithstanding any applications-related information or support that may be provided by TI. Further, Buyers must fully indemnify TI and its representatives against any damages arising out of the use of TI products in such safety-critical applications.

TI products are neither designed nor intended for use in military/aerospace applications or environments unless the TI products are specifically designated by TI as military-grade or "enhanced plastic." Only products designated by TI as military-grade meet military specifications. Buyers acknowledge and agree that any such use of TI products which TI has not designated as military-grade is solely at the Buyer's risk, and that they are solely responsible for compliance with all legal and regulatory requirements in connection with such use.

TI products are neither designed nor intended for use in automotive applications or environments unless the specific TI products are designated by TI as compliant with ISO/TS 16949 requirements. Buyers acknowledge and agree that, if they use any non-designated products in automotive applications, TI will not be responsible for any failure to meet such requirements.

Following are URLs where you can obtain information on other Texas Instruments products and application solutions:

Products		**Applications**	
Audio	www.ti.com/audio	Communications and Telecom	www.ti.com/communications
Amplifiers	amplifier.ti.com	Computers and Peripherals	www.ti.com/computers
Data Converters	dataconverter.ti.com	Consumer Electronics	www.ti.com/consumer-apps
DLP® Products	www.dlp.com	Energy and Lighting	www.ti.com/energy
DSP	dsp.ti.com	Industrial	www.ti.com/industrial
Clocks and Timers	www.ti.com/clocks	Medical	www.ti.com/medical
Interface	interface.ti.com	Security	www.ti.com/security
Logic	logic.ti.com	Space, Avionics and Defense	www.ti.com/space-avionics-defense
Power Mgmt	power.ti.com	Transportation and Automotive	www.ti.com/automotive
Microcontrollers	microcontroller.ti.com	Video and Imaging	www.ti.com/video
RFID	www.ti-rfid.com	Wireless	www.ti.com/wireless-apps
RF/IF and ZigBee® Solutions	www.ti.com/lprf		

TI E2E Community Home Page e2e.ti.com

Mailing Address: Texas Instruments, Post Office Box 655303, Dallas, Texas 75265
Copyright © 2011, Texas Instruments Incorporated