Triac couplers—basic properties and application design

Introduction

Triac couplers are photocouplers that have a triac output. They are commonly used for AC powered load switching applications. Triac couplers operate on AC power and differ from transistor couplers and IC couplers in several ways. This document explains the implications of differences in performance characteristics for circuit design.

Content

1. Typical uses of triac couplers 3
2. Operating principles 3
3. Construction of triac couplers 4
4. Characteristics of triac couplers 5
5. Triac couplers vs. mechanical relays 6
6. Basic application circuit of triac coupler 7
7. How to Use triac couplers 8
   7.1 Basic operation with resistance load 8
   7.2 Basic operation with inductive load 9
8. Key parameters on triac coupler data sheet 10
9. Triac coupler circuit design 12
   9.1 LED Input current I_F 12
   9.2 Limiting resistance Rin 14
   9.3 Selection of main triac 14
   9.4 Gate resistance R_{GK} 14
   9.5 Limiting resistance R_T 15
   9.6 Snubber circuit, C_S and R_S 15
   9.7 TNR surge protection varistor 15
10. Design considerations 16
   10.1 Zero-cross vs. non-zero-cross 17
   10.2 Basic operation by phase control 18
   10.3 Zero-cross voltage, inhibit voltage V_{IH} 19
   10.4 Inhibit current I_{IH} 20
   10.5 I_{DRM} characteristics 20
   10.6 Switching time t_{ON} 21
   10.7 dV/dt characteristics 22
   10.8 Commutation dV/dt characteristics 23
   10.9 Commutation dV/dt triac coupler malfunction—inductive loads 24
   10.10 Impulse noise immunity V_N characteristics 25
   10.11 Holding current I_H 26
   10.12 RMS On-state current I_T 27
   10.13 Pulse on-state current I_{TP} 27
   10.14 Peak non-repetitive surge current I_{TSM} 27
11. Typical triac coupler application circuit 28
12. (Reference) Thyristor coupler applications 29
   12.1 Uses for thyristor couplers 29
   12.2 Operating principles of the thyristor coupler 29
   12.3 (Reference) Basic application circuit with thyristor coupler 29
13. FAQ 31
14. Revision history 34
RESTRICTIONS ON PRODUCT USE 35

1. Typical uses of triac couplers

Triac couplers are commonly used for on/off switching of AC loads such as AC-powered motors, lamps, heaters and electromagnetic valves. For small loads, a single triac coupler will usually suffice. For larger loads, a triac coupler is often used in combination with the main triac element, which has direct control over the load and uses the triac coupler as the trigger device.

Although mechanical relays are sometimes used for AC load control, triac couplers are generally considered superior, due to the many limitations of mechanical relays such as finite service life of contacts, slow switching speed and audible sound during operation. Triac couplers can also be used for phase control of AC loads. Triac couplers have similar operating characteristics to semiconductors, and as such are quite different from mechanical relays. Circuit design should take these characteristics into consideration.

2. Operating principles

A triac coupler comprises an LED element on the input side and a triac element on the output side. The triac element consists of antiparallel connected P-N-P-N junction thyristor elements residing on a single chip. Normally a triac element switches on in response to current at the gate terminal. In a triac coupler, light from the LED is converted to photoelectric current at the PN junction surface, providing gate current that switches on the triac.

While thyristor elements can perform on/off switching for current in one direction only, the triac element has multiple thyristor elements connected in antiparallel configuration, thus allowing on/off control of current moving in both directions (typically AC power).

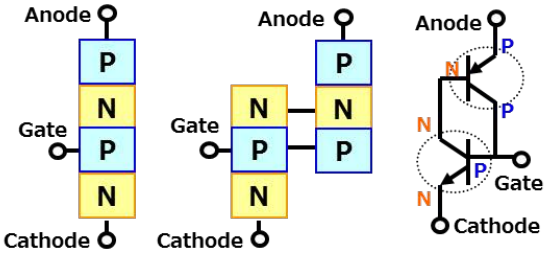

Figure 2.1.1 Equivalent circuit diagram for thyristor element

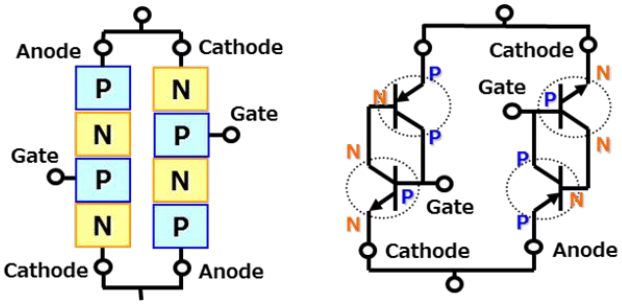

Figure 2.1.2 Equivalent circuit diagram for triac element

3. Construction of triac couplers

A triac coupler comprises an LED on the input side and a phototriac element on the output side. Normally the LED and triac elements are on opposite sides, to allow light from the LED to reach the photosensitive surface of the triac PN junction.

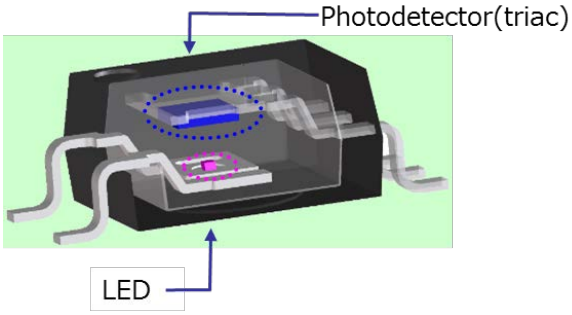

Figure 3.1.1 Cutaway view of triac coupler

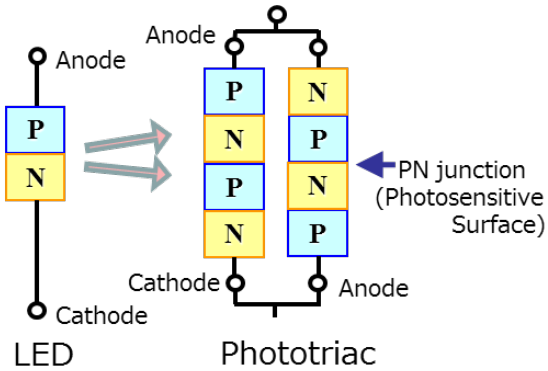

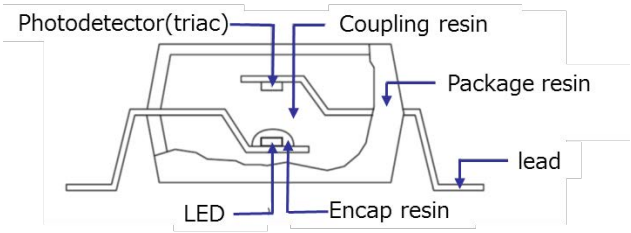

Figure 3.1.2 Cross-section view of triac coupler

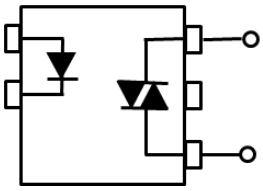

Figure 3.1.3 Equivalent circuit diagram for triac coupler

4. Characteristics of triac couplers

The table below compares the key characteristics of MOSFET output semiconductor photorelays and mechanical relays with physical contacts.

Category	Type	Description
Semiconductor relay (no contacts)	Triac coupler (thyristor coupler)	· Employs semiconductor element (triac) · AC loads only · Suitable for large currents when combined with main triac
	Photorelay (MOSFET output)	· Employs MOSFET as output side element · Commonly used as substitute for signal relay · Suitable for both AC and DC loads
Mechanical relay (physical contacts)	Signal relay	·Designed for signal, line and high-frequency control, with contacts operated by current of less than 2 A ·Includes high-frequency relays
	Power relay	· Contacts operated by current higher than 2 A · Includes general-purpose relays for control panels and power relays for large DC current applications

Table 4.1.1 Triac couplers vs. other relay types

5. Triac couplers vs. mechanical relays

A triac coupler is a type of semiconductor relay. It is considered superior to mechanical relays in several key respects.

1. Triac couplers have a compact mounting footprint, with minimum design dimensions of around 3.7 x 7.0 x 2.1 mm.
2. Due to the lack of mechanical contacts, triac couplers are more reliable and have a longer service life.
3. Triac couplers help to reduce the overall power requirements of the circuit, since the input LED requires only 5 to 10 mA for switching.
4. Triac couplers offer faster switching than mechanical relays as well as silent operation with minimal electrical noise.
5. Being semiconductor switches, triac couplers are compatible with hot switches.
6. Triac couplers are not subject to chattering, a common problem with mechanical relays.
7. Triac couplers can be used for phase control and power control of AC loads.

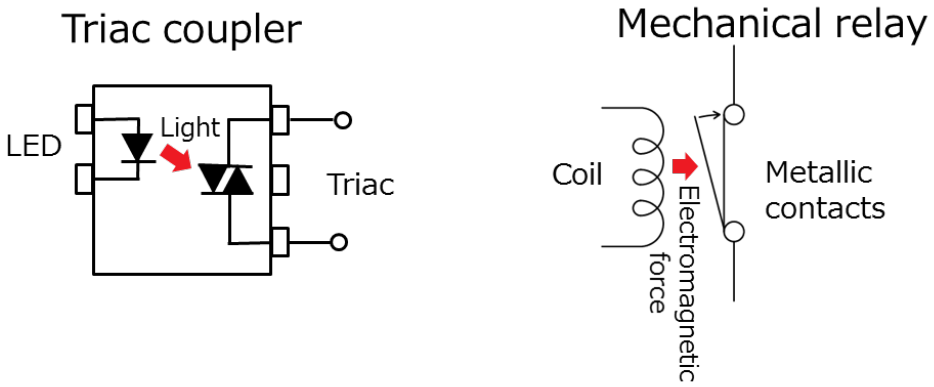

Figure 5.1.1 Triac coupler vs. Mechanical relay

6. Basic application circuit of triac coupler

Triac couplers can be used in isolation for AC load control, provided that the load is relatively small (about 50 mA or less). For larger currents (up to several amps), the triac coupler is combined with the main triac. The diagram below shows a basic circuit configuration. Rs and Cs are elements of a snubber circuit that prevents triac malfunction by shielding it from noise, while TNR is a varistor that absorbs any surge voltage from the power line.

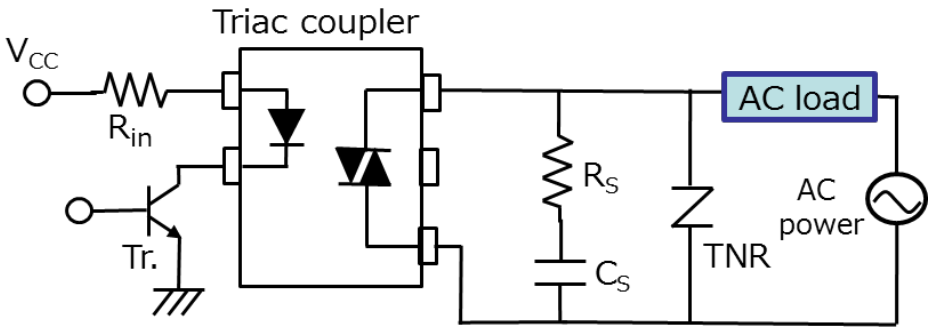

Figure 6.1.1 AC load control using triac coupler only

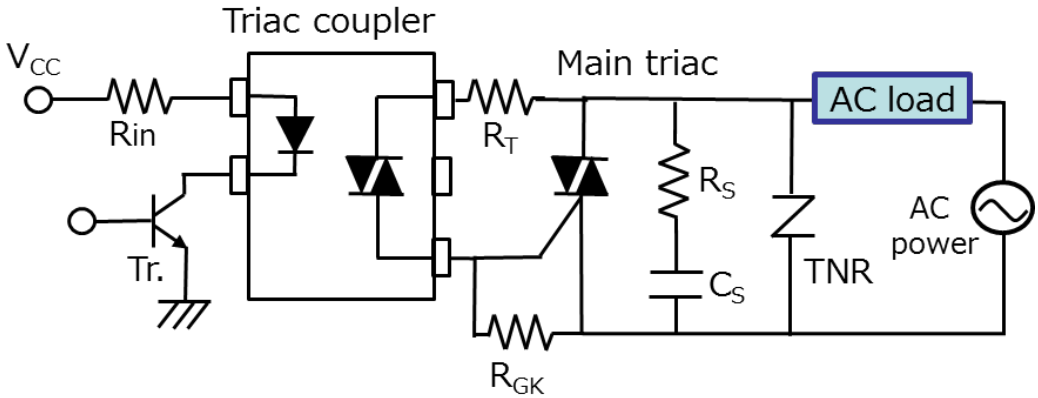

Figure 6.1.2 AC load control using triac coupler combined with main triac

7. How to Use triac couplers

The way the triac operates depends on the type of AC load. In this section, we consider the operating voltage and current for resistance load and inductive load and show the corresponding non-zero-cross operating waveforms. Zero cross triac couplers will be discussed later in Section 10.1.

7.1 Basic operation with resistance load

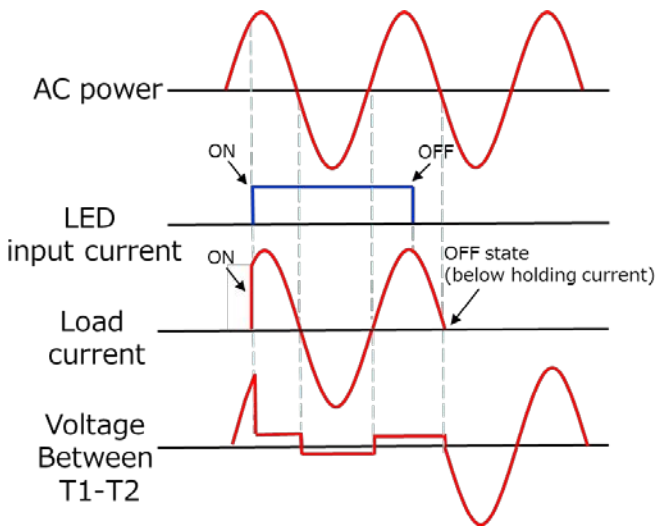

Figure 7.1.1 Triac coupler operating waveforms (non-zero-cross)

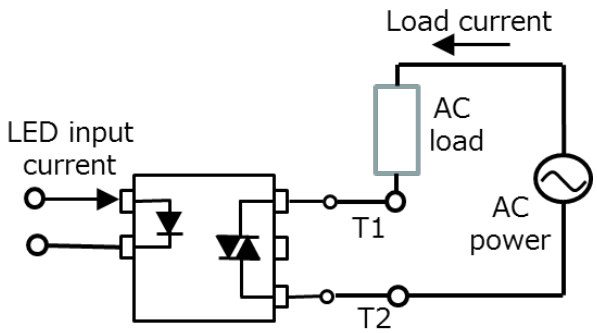

Control circuit and operating waveforms for triac coupler with direct AC load

1. Switching on

The output side triac switches on in response to input LED current. The load operates and load current is generated. On-state voltage between T1 and T2 of the triac is in the range 1 to 2 V.

2. Switching off

The triac does not switch off when the LED turns off; it waits until the AC power supply is in the vicinity of 0 V and below the holding current (see Section 10.11). At this point the AC load also switches off.

7.2 Basic operation with inductive load

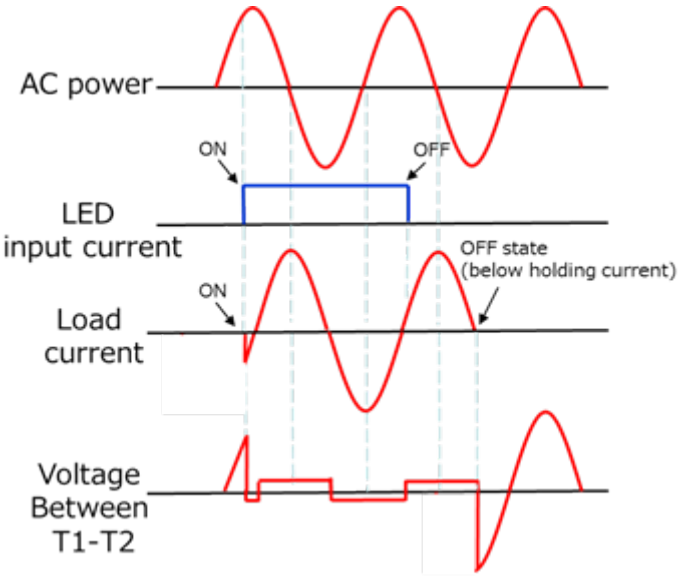

Figure 7.2.1 Triac coupler operating waveforms (non-zero-cross)

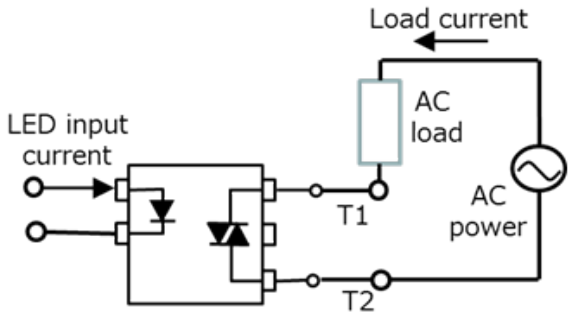

Control circuit and operating waveforms for triac coupler with direct AC load
For inductive load, current is 90° phase behind voltage.

1. Switching on

The output triac switches on in response to input LED current. The load operates and load current is generated. During the on state, the on-state voltage of the triac between T1 and T2 is around 1 to 2 V.

2. Switching off

The triac does not switch off when the LED turns off; it waits until the AC power is in the vicinity of 0 V and below the holding current (see Section 10.11). At this point the AC load also switches off.

8. Key parameters on triac coupler data sheet

The key items of interest on data sheets for triac couplers are described below. Section 10 also describes implications for circuit design.

Forward current on input side
The maximum current that the input LED can absorb without failing when ambient temperature is 25°C. This should be used as the maximum value in the design.

Peak stopping potential
The maximum voltage that can safely be applied to the triac output terminals. This governs the power supply rating.

7. Absolute Maximum Ratings (Note) (Unless otherwise specified, T_a = 25 °C)

	Characteristics		Symbol	Note	Rating	Unit
LED	Input forward current		I_F		50	mA
	Input forward current derating	($T_a \geq 53$ °C)	$\Delta I_F/\Delta T_a$		-0.7	mA/°C
	Input forward current (pulsed)		I_{FP}	(Note 1)	1	A
	Input reverse voltage		V_R		5	V
	Input power dissipation		P_D		100	mW
	Input power dissipation derating	($T_a \geq 25$ °C)	$\Delta P_D/\Delta T_a$		-1.0	mW/°C
	Junction temperature		T_j		125	°C
Detector	Off-state output terminal voltage		V_{DRM}		800	V
	R.M.S. on-state current	(T_a = 25 °C)	$I_{T(RMS)}$		100	mA
		(T_a = 70 °C)			50	mA
	R.M.S. on-state current derating	($T_a \geq 25$ °C)	$\Delta I_{T(RMS)}/\Delta T_a$		-1.1	mA/°C
	ON-state current (pulsed)		I_{ONP}	(Note 2)	2	A
	Peak non-repetitive surge current		I_{TSM}	(Note 3)	1.2	A
	Output power dissipation		P_O		300	mW
	Output power dissipation derating	($T_a \geq 25$ °C)	$\Delta P_O/\Delta T_a$		-4.0	mW/°C
	Junction temperature		T_j		125	°C
Common	Total power dissipation		P_T		400	mW
	Total power dissipation derating	($T_a \geq 25$ °C)	$\Delta P_T/\Delta T_a$		-4.4	mW/°C
	Operating temperature		T_{opr}		-40 to 100	°C
	Storage temperature		T_{stg}		-55 to 125	
	Lead soldering temperature	(10 s)	T_{sol}		260	
	Isolation voltage	AC, 60 s, R.H. ≤ 60 %	BV_S	(Note 4)	5000	Vrms

Peak on-state voltage
The voltage at either side of the output triac in the on state.

Peak off-state current
The leak current when the output triac is off. The circuit designs should ensure that the load is not impacted by leak current.

Table 8.1.1 Data sheet sample 1

Peak off-state current
The leak current when the output triac is off. The circuit designs should ensure that the load is not impacted by leak current.

Peak on-state voltage
The voltage at either side of the output triac in the on state.

9. Electrical Characteristics (Unless otherwise specified, T_a = 25 °C)

	Characteristics	Symbol	Note	Test Condition	Min	Typ.	Max	Unit
LED	Input forward voltage	V_F		I_F = 10 mA	1.0	1.15	1.3	V
	Input reverse current	I_R		V_R = 5 V	—	—	10	μA
	Input capacitance	C_t		V = 0 V, f = 1 MHz	—	30	—	pF
Detector	Peak off-state current	I_{DRM}		V_{DRM} = 800 V	—	10	1000	nA
	Peak on-state voltage	V_{TM}		I_{TM} = 100 mA	—	1.7	3.0	V
	Holding current	I_H		—	—	1.0	—	mA
	Critical rate of rise of off-state voltage	dv/dt		V_{in} = 240 V, T_a = 25 °C See Fig. 9.1	—	2000	—	V/μs
	Critical rate of rise of commutating voltage (dv/dt)	dv/dt(c)		V_{in} = 60 Vrms, I_T = 15 mA See Fig. 9.1	—	0.2	—	

10. Coupled Electrical Characteristics (Unless otherwise specified, T_a = 25 °C)

Characteristics	Symbol	Note	Test Condition	Min	Typ.	Max	Unit
Trigger LED current	I_{FT}		V_T = 6 V	—	—	5	mA

The minimum value of LED input current to switch on output triac. The circuit design should be considered the LED deterioration over time, the temperature characteristics, and the circuit margin. LED input current should be greater than I_{FT}(MAX)(5mA in this case). Refer to Section 9.1

Table 8.1.2 Data sheet sample 2

9. Triac coupler circuit design

In describing basic application circuits for triac couplers, we will begin by looking at designing constants for peripheral circuits. Since this is governed by the characteristics of the main triac, we will consider circuits that incorporate the main triac. Although the discussion below is for non-zero-cross triac couplers, it applies equally to zero-cross triac couplers.

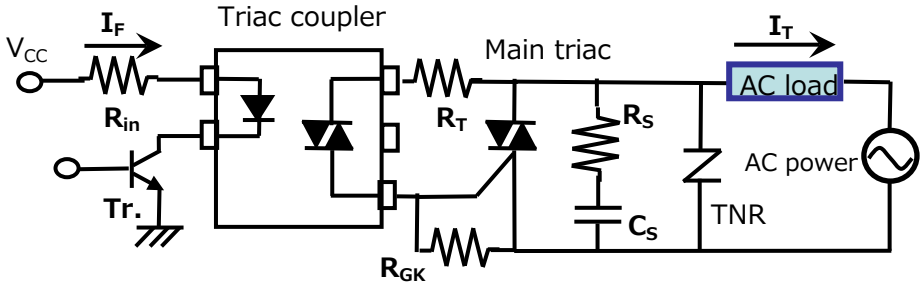

Figure 9.1.1 Basic application circuit for triac coupler

9.1 LED Input current I_F

The output triac requires current to the input LED of the triac coupler in order to switch on. The current must be larger than the maximum I_{FT} value on the data sheet. It is normally determined as follows:

$$I_F \text{ design value} = I_{FT}(\text{max.}) \times \alpha 1 \times \alpha 2 \times \alpha 3$$

where

α1 is the coefficient of LED deterioration over time, taken from the graph of average value (X) (X)−3σ (see Figure 1). Note that the coefficient increases in line with both ambient temperature and I_F value, and is also affected by the LED type.

α2 is the coefficient for change in ambient temperature of I_{FT}, based on the $I_{FT}-T_a$ curve in the relevant technical data (see Figure 9.1.3).

α3 is the drive coefficient, a design margin that takes into account factors such as supply power variance and tolerance requirements

Test conditions: I_F = 20 mA, Ta = 40℃

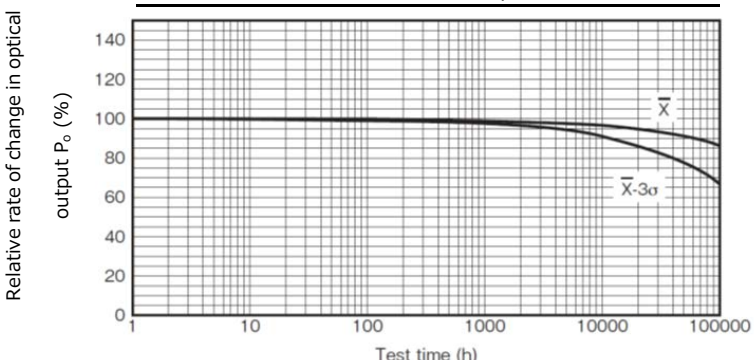

Where light output P_o drops to 70% after 100,000 hours: α1 = 1 ÷ 0.7 = 1.43

Figure 9.1.2 Sample data for estimated change in GaAs LED over time

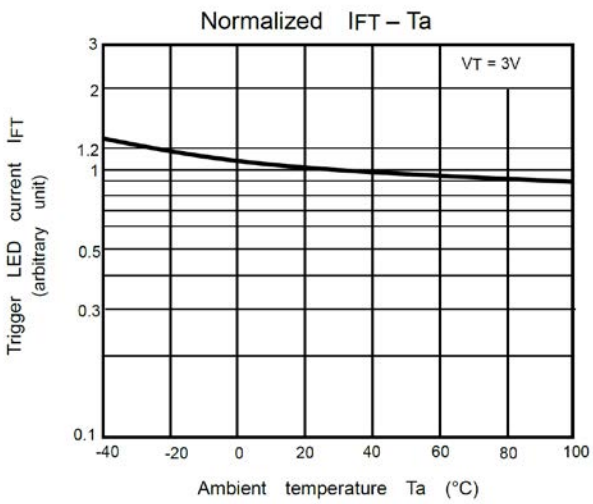

In an operating environment where the temperature can drop as low as – 40°C, I_{FT} increases by 30% so: α2 = 1.3

Figure 9.1.3 I_{FT} temperature curve

The TLP560G circuit design is shown below as an example.
Trigger LED currents for the triac coupler I_{FT} (MAX) are ranked for different product types. The table below shows the TLP560G values: no rank = 10 mA, IFT7 = 7 mA and IFT5 = 5 mA.

Classification (Note 2)	Trigger LED Current (mA) V_T = 3V, Ta = 25°C		Marking of Classification
	Min	Max	
(IFT5)	—	5	T5
(IFT7)	—	7	T5, T7
Standard	—	10	T5, T7, blank

Table 9.1.1
Trigger LED current (I_{FT}) categories on data sheet

Sample calculation 1
This example assumes an (IFT7) product.
For a maximum I_{FT} product rating of 7 mA with T_a = 40°C, expected product life = 100,000 hours and a design margin of α3 = 1.2, we have:

I_F design value = I_{FT}(max.) x α1 x α2 x α3
= 7 mA x 1.43 x 1.3 x 1.2
= 15.6 mA

So the circuit should be designed with I_F current of at least 15.6 mA.

Sample calculation 2
This example assumes an (IFT5) product.

I_F design value = I_{FT}(max.) x α1 x α2 x α3
= 5 mA x 1.43 x 1.3 x 1.2
= 11.2 mA

So the circuit should be designed with I_F current of at least 11.2 mA.

From the above calculations we can see that a product with (lower IFT) rank can be designed with lower input current I_F.

9.2 Limiting resistance R_{in}

We use the LED current I_F derived above to determine the value of the limiting resistance value R_{in} connected in series with the LED. R_{in} is affected by several factors: the voltage drop V_F associated with the LED, operating temperature dependency (V_F tends to be higher at low temperatures) and the voltage drop at the signal input (drive) element, denoted here as Tr. $V_{CE(sat)}$. The relevant technical documentation will show the maximum values for each of these. It is important to stay below the absolute maximum rated I_F value for the triac coupler. Also, the power supply (V_{CC}) and current to the drive element should have at least the capacity of the design I_F.

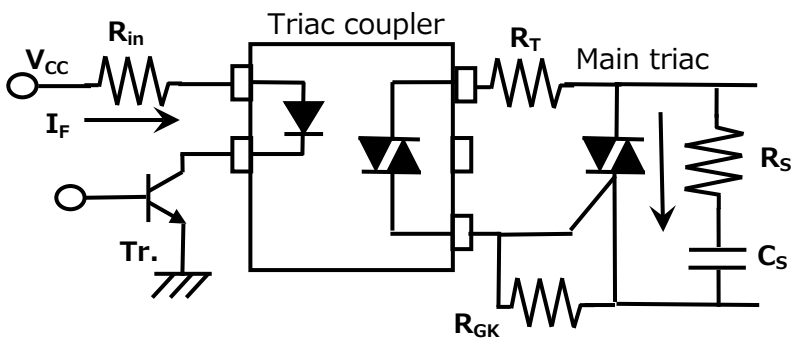

Figure 9.2.1 Basic application circuit for triac coupler

The maximum value of R_{in} based on the I_F design value is given by:

$$R_{in} \leq \frac{V_{CC}(MIN) - V_F(MAX) - V_{CE}(sat)(MAX)}{\text{Design value of } I_F}$$

The minimum value of R_{in} based on the maximum rated value of I_F is given by:

$$R_{in} > \frac{V_{CC}(MAX) - V_F(MIN) - V_{CE}(sat)(MIN)}{I_F(MAX)}$$

9.3 Selection of main triac

The choice of main triac is governed by the power supply voltage and the load current. More information can be found on the data sheet for the main triac.

9.4 Gate resistance R_{GK}

Gate resistsance R_{GK} helps to regulate the sensitivity of the main triac and prevents operational malfunction associated with power supply noise and dV/dt.

Gate resistance also diverts noise from the gate to reduce the incidence of malfunction. Normally a resistance in the range 10 to 100 Ω is sufficient. The design value will depend on the characteristics of the main triac. In some cases an additional capacitor (0.1 – 0.01 μF approx.) may be installed in parallel with R_{GK} as a noise bypass.

9.5 Limiting resistance R_T

The triac coupler acts as the trigger device for the main triac, allowing gate current to pass through while the main triac is off but then shutting off the current when the main triac switches on. The data sheet gives a rated value for I_{TP}, the pulse on-state current, which is the current present when the main triac is off. For most triac couplers this will be 2 A. For non-zero-cross triac couplers, the current should normally be no more than about half the rated value. Thus, 100 Ω resistance is recommended for a 100 V AC power supply and 200 Ω for a 200 V AC power supply. Zero-cross triac couplers tend to have lower on-state voltage and limiting resistance is generally not required.

9.6 Snubber circuit, C_S and R_S

Snubber circuits are used to suppress reverse voltage and dV/dt during commutation for L loads, and require R_S and C_S values. Current flows through the snubber circuit in the event of a sudden voltage spike dV/dt. The C_S charging time T is given by the following expression:

$$T = C_S \times (R_L + R_S)$$

where R_L is the load resistance

Since $T > 0.632 \times VAC / (dV/dt)$, we have:

$$C_S > 0.632VAC/[(dV/dt) \times (R_L+R_S)]$$

By substituting the AC power supply voltage for VAC and the triac coupler off-state voltage increase factor for dV/dt, we can find R_S and C_S.

The capacitor C_S suppresses dV/dt, while R_S prevents device failure due to discharge current from C_S when the triac switches on. Resistance of 47 Ω is generally considered sufficient for AC 100 V power, or 100 Ω for AC 200 V power. Toshiba recommended settings are:

AC 100 V: $R_S = 47\ \Omega$, $C_S = 0.033\ \mu F$
AC 200 V: $R_S = 100\ \Omega$, $C_S = 0.1\ \mu F$

The capacitor C_S is rated at 400 V for AC 100 V power and 600 V for AC 200 V power.

9.7 TNR surge protection varistor

TNR surge protection varistor is used to prevent damage to the triac in circuits where the voltage may exceed the maximum rated voltage of the triac. The TNR must have a rapid response time in the event of a surge. For AC 100 V power the TNR element should be in the range of 200 to 300 V; for AC 200 V it should be 400 to 500 V.

10. Design considerations

Triac couplers are normally combined with the main triac for AC load control. Key design considerations are listed in Sections 10.1 through 10.14. For the purpose of clarity, we will consider triac couplers used in isolation. Where a main triac is connected, commutation dV/dt (Sections 10.8 and 10.9) and holding current I_H (Section 10.11) characteristics apply on the main triac side.

10.1 Zero-cross vs. non-zero-cross
10.2 Basic operation by phase control
10.3 Zero-cross voltage, inhibit voltage V_{IH}
10.4 Inhibit current I_{IH}
10.5 I_{DRM} characteristics
10.6 Switching time t_{ON}
10.7 dV/dt characteristics
10.8 Commutation dV/dt characteristics
10.9 Commutation dV/dt triac coupler malfunction—inductive loads
10.10 Impulse noise immunity V_N characteristics
10.11 Holding current I_H
10.12 RMS On-state current I_T
10.13 Pulse on-state current I_{TP}
10.14 Peak non-repetitive surge current I_{TSM}

10.1 Zero-cross vs. non-zero-cross

Zero-cross triac couplers are designed to remain in the off state during high voltage from the AC power supply, and are often used to protect against excessive rush current and EMI when switched on. Note that zero-cross triac couplers cannot be used for phase control (see Section 10.2).

Zero-cross circuit operation is shown below.

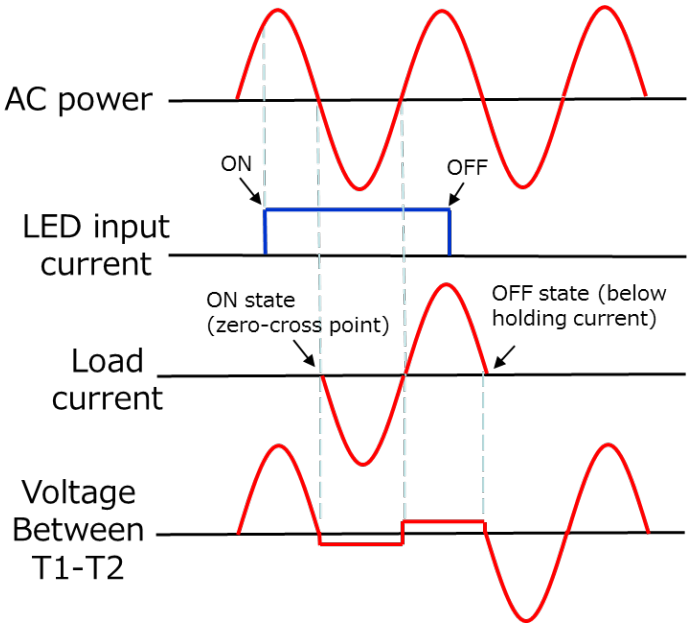

Figure 10.1.1 Operating waveform for zero-cross triac coupler

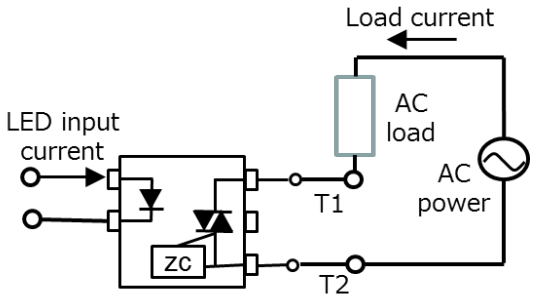

Circuit design and operating waveforms for zero cross triac coupler for direct AC load control

1. Switching on

If the AC power supply voltage is greater than the zero-cross voltage when input LED current is registered, the zero cross function prevents the triac from switching on. The triac switches on when the AC power drops down to the vicinity of 0 V (close to the zero cross). During the on state, the on-state voltage of the triac between T1 and T2 is around 1 to 2 V.

2. Switching off

The triac does not switch off when the LED turns off; it waits until the AC power is in the vicinity of 0 V and below the holding current (see Section 10.11). At this point the AC load also switches off.

10.2 Basic operation by phase control

By shifting the phase of the input LED current relative to the AC power supply phase, we can control the triac on-state time and regulate the amount of electric energy reaching the load. A zero-cross triac switches on in the vicinity of 0 V only, which is not suitable for phase control. Phase control operation is shown below; Figure 10.2.1 is for high electric energy and Figure 10.2.2 for low electric energy.

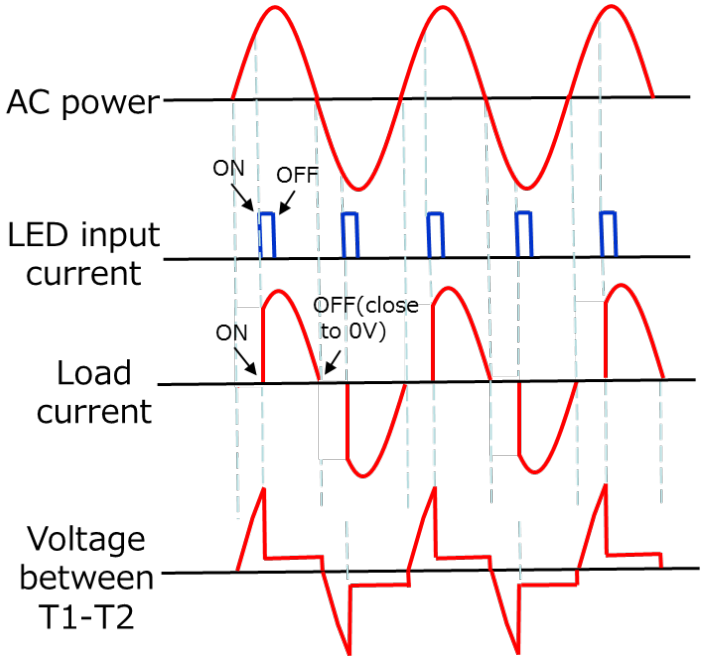

Figure 10.2.1 Load current and voltage waveform for phase control with high electric energy

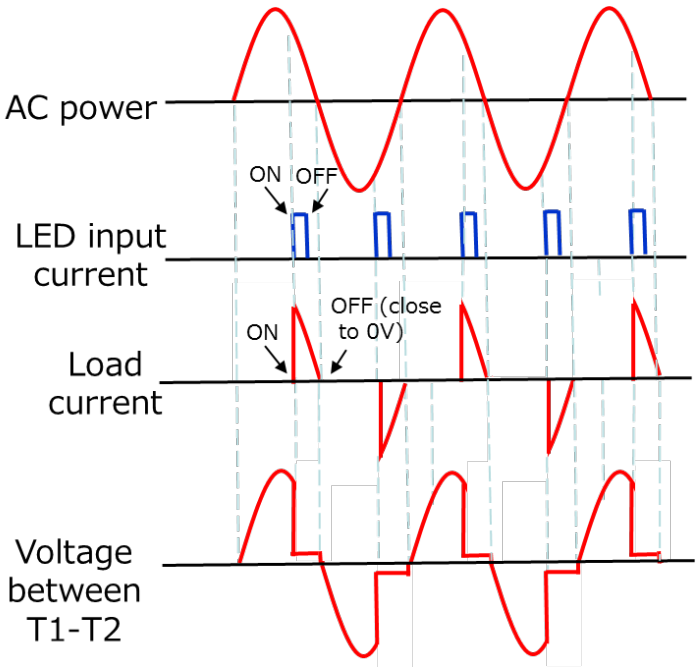

Figure 10.2.2 Load current and voltage waveform for phase control with low electric energy

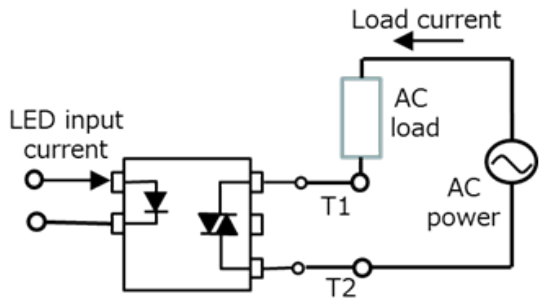

Triac coupler AC load phase control circuit and operating waveforms (not applicable to zero-cross type)

1. Switching on

The output triac switches on in response to input LED current. The load operates and load current is generated. During the on state, the on-state voltage of the triac between T1 and T2 is around 1 to 2 V.

2. Switching off

The triac does not switch off when the LED turns off; it waits until the AC power is in the vicinity of 0 V and below the holding current (see Section 10.11). At this point the AC load also switches off.
The load operates once LED current is detected and continues until the AC power is close to 0 V. Load power consumption can be controlled by adjusting the LED current phase angle.

3. Controlling electric energy

The electric energy applied to the load is controlled by the timing that the LED switches on input current relative to the AC power supply phase. Note that this cannot be done for switching off, since the off timing is always in the vicinity of the zero cross.
The input LED pulse current time should be longer than the triac on state time t_{on}.

10.3 Zero-cross voltage, inhibit voltage V_{IH}

A zero-cross triac coupler is one where the triac does not come on in response to on-state LED at a voltage greater than the zero-cross voltage. This is because the triac element features a built-in voltage detection circuit that shuts off the gate current if the voltage exceeds a predefined threshold level. Although the zero-cross voltage value varies between products, the maximum guaranteed value is called the zero-cross voltage or inhibit voltage.

Generally speaking, when the zero-cross voltage is low, the triac does not switch on even for high triac voltages. A lower zero-cross voltage can thus help to suppress noise; however it also limits the on-state range within a given AC power cycle. For consistent results, it is important to consider both the level and duration of the LED current. Note that zero-cross voltage (inhibit voltage) is also affected by temperature. The graphs below plot data taken from a typical data sheet.

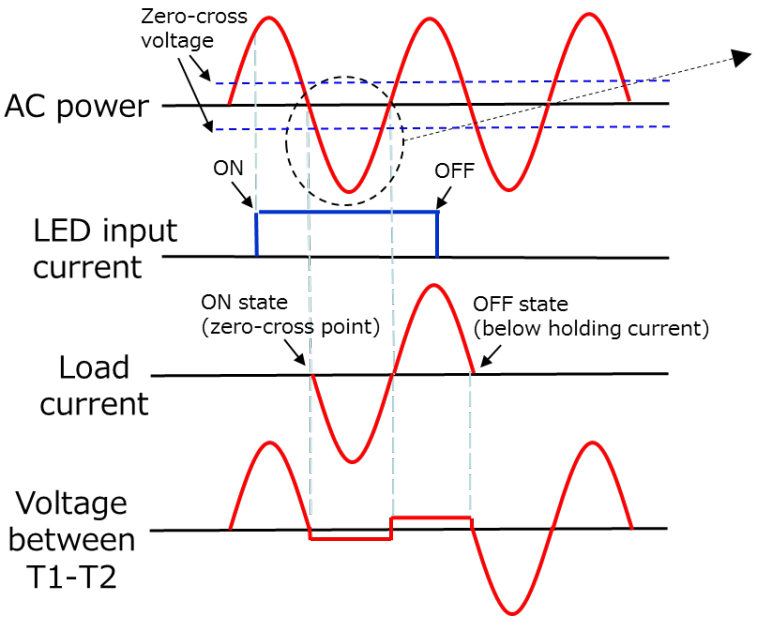

Figure 10.3.1 Zero cross operating waveforms

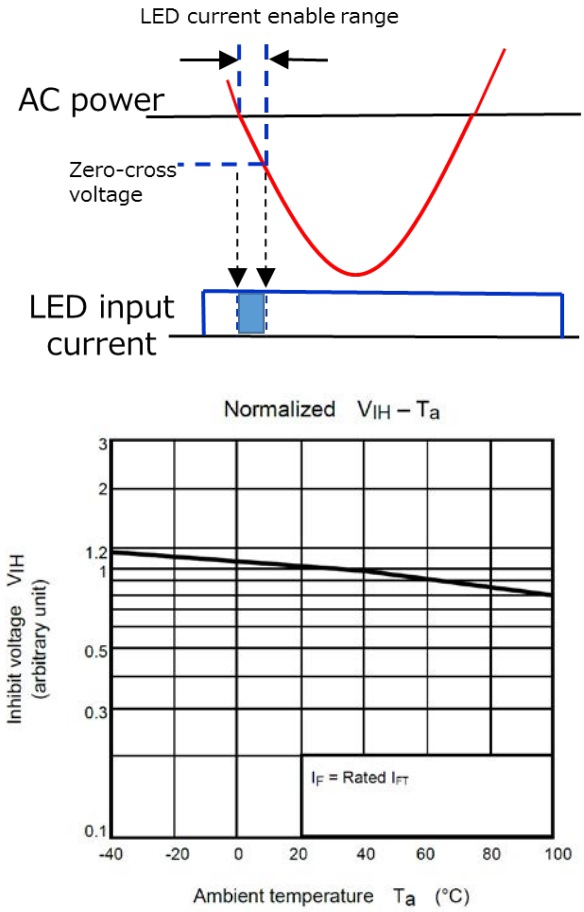

Figure 10.3.2 V_{IH} vs. T_a

10.4 Inhibit current I_{IH}

Where the zero-cross triac coupler voltage exceeds the zero-cross voltage, the triac element is not switched on by the LED, leading to leakage current in the triac. The leakage current exceeds I_{DRM} by the amount of on current sent to the LED. The associated inhibit current I_{IH} can cause load malfunction if the circuit is not designed properly. Note that inhibit current tends to be higher at low temperatures.

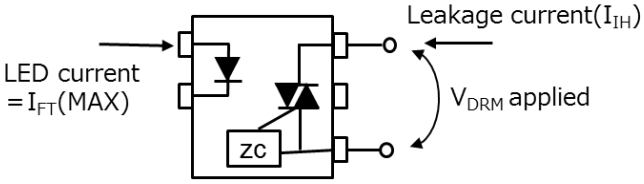

Figure 10.4.1 Inhibit current I_{IH}

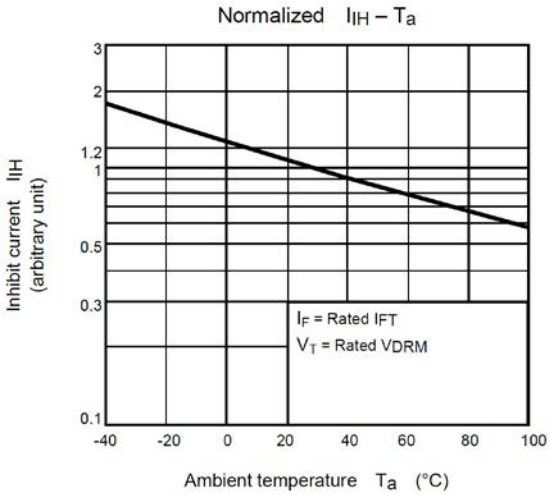

Figure 10.4.2 I_{IH} vs. T_a

10.5 I_{DRM} characteristics

If the maximum rated voltage V_{DRM} is applied to either side of the triac element with the input LED in the off state, the triac switches off, and some leakage current is generated. The leakage current, denoted I_{DRM}, increases exponentially with temperature and at high temperatures can even cause a circuit malfunction.

The data sheet provides a graph of I_{DRM} against T_a. The sample graph shown below is for a product that guarantees a maximum I_{DRM} of 1 μA (MAX) for V_{DRM} = 600 V and T_a = 25°C. From the graph we can see that when T_a = 85°C, I_{DRM} = 4 μA.

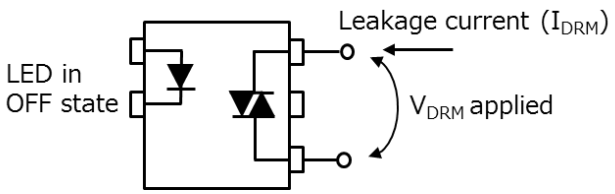

Figure 10.5.1 I_{DRM} characteristics

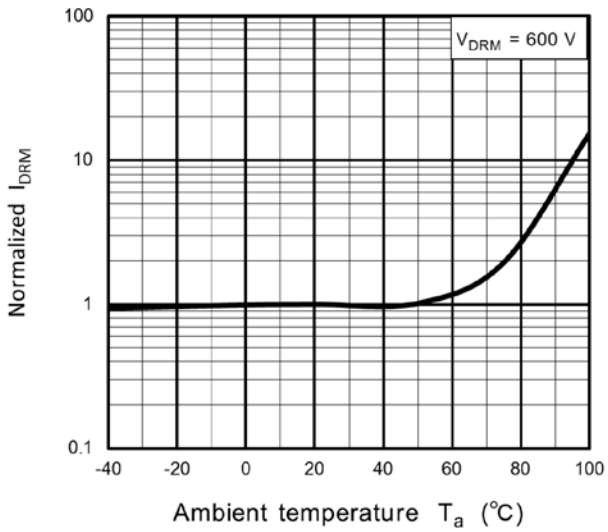

Figure 10.5.2 I_{DRN} vs. T_a

10.6 Switching time t_{ON}

In Section 10.2, we saw how phase control allows us to control the LED on-state time with periodal square wave signal inputs. There is a short lag after the LED current before the triac coupler switches on; this is known as the switching time t_{ON}. Note that the triac will not switch on if the pulse width of the LED current (the LED on time) is shorter than t_{ON}.

The higher the LED current, the shorter the t_{ON} value.

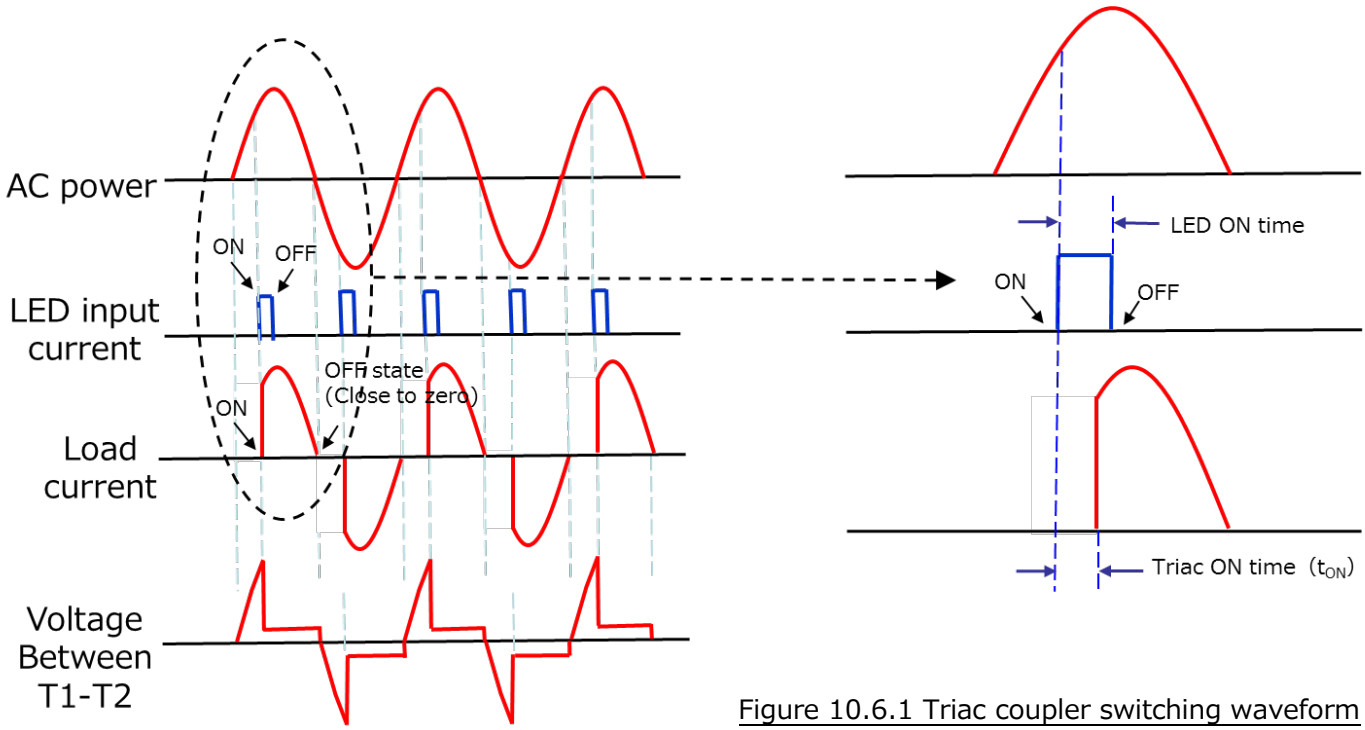

Figure 10.6.1 Triac coupler switching waveform

10.7 dV/dt characteristics

When a voltage lower than the maximum rated voltage V_{DRM} is applied to both sides of the triac element with the input LED off, if the voltage is accompanied by an abrupt rise (dV/dt) this can cause the triac to switch on unexpectedly. The dV/dt threshold value just prior to the triac switching on is known as the dV/dt tolerance, or Rate of Rise of Off-State Voltage on the data sheet.

When the triac element PN junction surface is in reverse bias state and an abrupt rise voltage dV/dt is applied, this causes charging current to flow to the PN junction capacitance, which acts as triac gate current and likewise causes the triac to switch on unexpectedly.

The charging current tends to increase in line with the temperature, so further evaluation is required in this area.

A snubber circuit with C_S and R_S in series can be used to prevent dV/dt malfunction by ameliorating the dV/dt inclination. It should be noted however that the snubber circuit is not a panacea for all forms of malfunction.

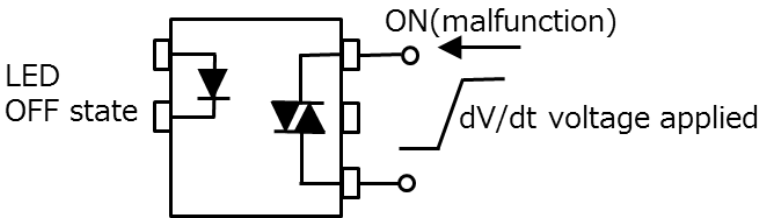

Figure 10.7.1 dV/dt characteristics

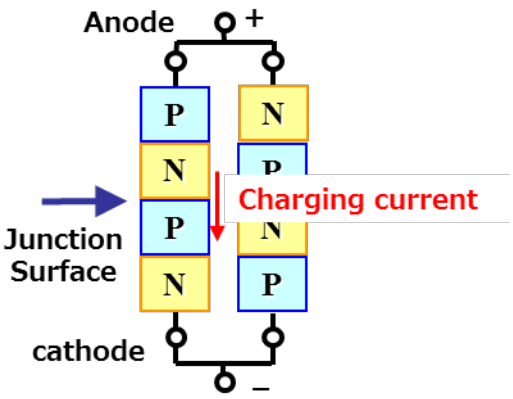

Figure 10.7.2 Internal charging current in triac due to dV/dt

10.8 Commutation dV/dt characteristics

In some cases when a triac coupler is used in isolation for on-off load switching, the self-holding feature can cause the triac to remain in on state on the output side after the LED has switched off. A typical example is commutation dV/dt malfunction.

The self-holding function of the output triac does not allow the triac to switch off as soon as the input LED switches off. It waits until the load current is close to the zero-cross current and below the holding current before switching off the triac.

For purely resistance type loads, since voltage and current are in the same phase, the voltage is close to 0 V when the current is close to the zero-cross current. The voltage is relatively low when the triac switches off, so the change in voltage dV/dt is fairly small.

For inductive loads, however, where current and voltage can be as much as 90° out of phase, the voltage may be quite high at the point where the current is switched off, and this leads to a significant voltage change between the two sides of the triac. This voltage change is called the commutation dV/dt. When the commutation dV/dt is large, minority carriers that accumulate in the triac are transformed into gate current of the triac in the opposite direction connected in antiparallel, causing the triac in the opposite direction to switch on unexpectedly. As a result, the triac is unable to switch off in the vicinity of the zero cross and remains in the on state for the next AC voltage cycle.

This type of malfunction is the product of triac characteristics when two triacs are connected in antiparallel and use a common semiconductor junction surface. Two separate thyristors in an antiparallel configuration would not produce a commutation dV/dt malfunction. A snubber circuit with C_S and R_S in series connected to both sides of the triac can help to prevent commutation dV/dt malfunction .

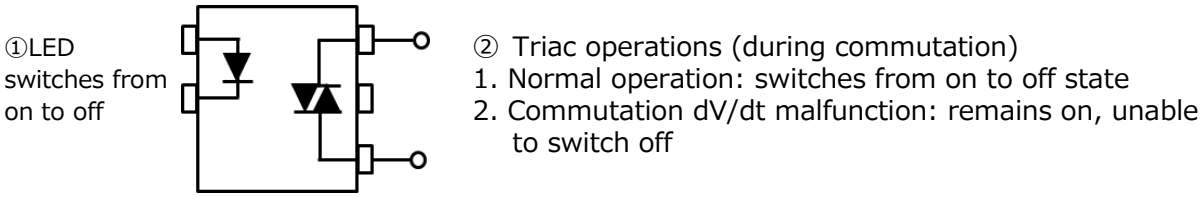

Figure 10.8.1 Commutation dV/dt malfunction

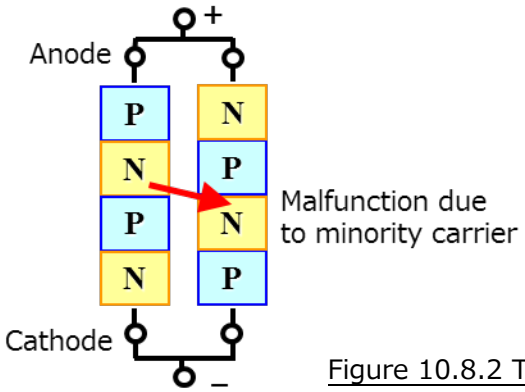

Figure 10.8.2 Triac minority carrier malfunction

Section 10.9 shows current and voltage waveforms for normal operation and malfunction in inductive load control applications, which tend to have a higher incidence of commutation dV/dt malfunction.

10.9 Commutation dV/dt triac coupler malfunction—inductive loads

The waveforms below are for a triac coupler circuit used to control direct AC load. For inductive loads, the current phase lags 90° behind voltage.

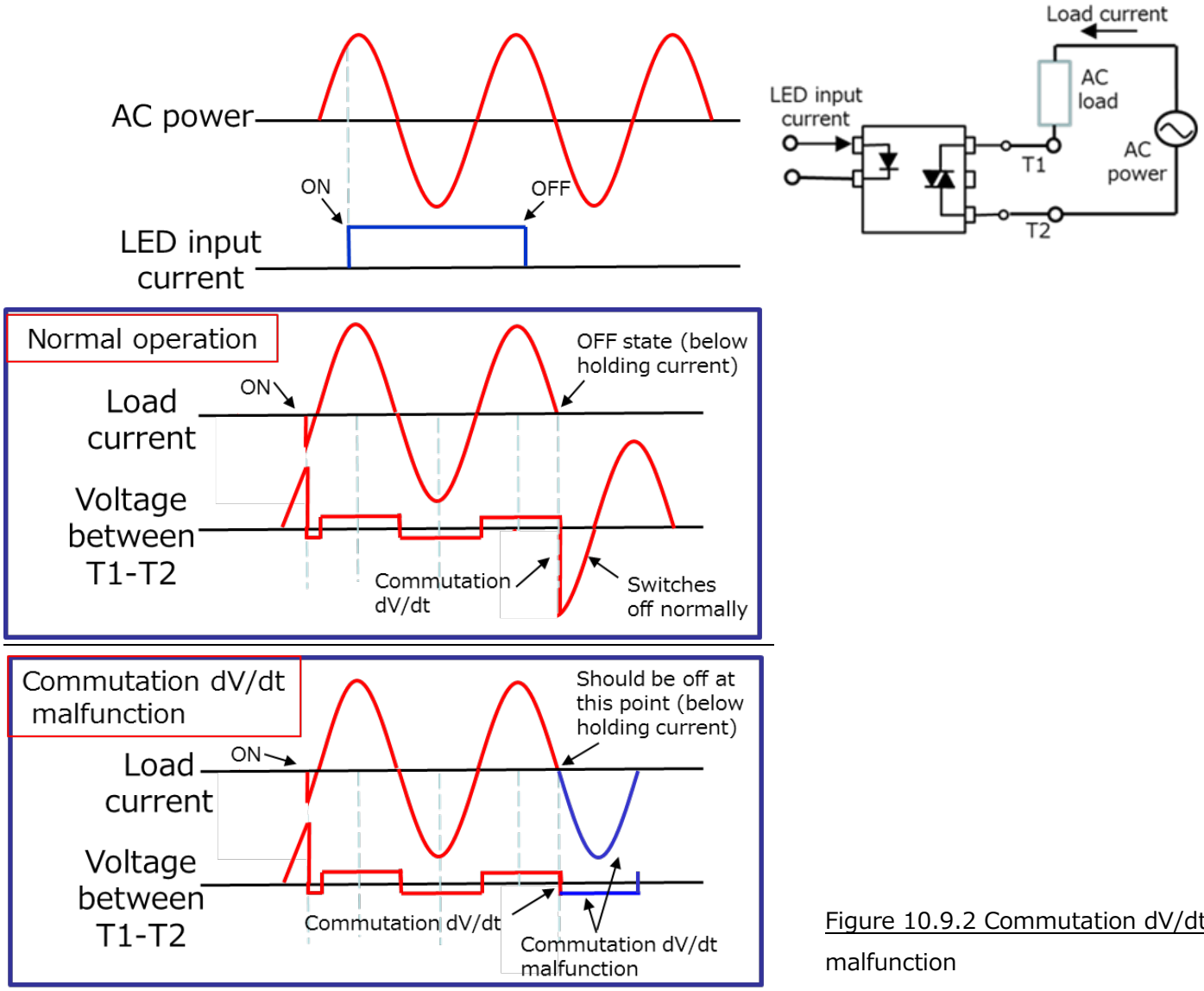

Figure 10.9.2 Commutation dV/dt malfunction

1. Switching on

The output triac switches on in response to input LED current. The load operates and load current is generated. During the on state, the on-state voltage of the triac between T1 and T2 is around 1 to 2 V.

2. Switching off normally

The triac does not switch off when the LED turns off; it waits until the AC power is in the vicinity of 0 V and below the holding current (see Section 10.11). At this point the AC load also switches off.

3. Switching off due to commutation dV/dt malfunction

The triac is unable to switch off due to the influence of dV/dt below the holding current, and it remains in the on state.

10.10 Impulse noise immunity V_N characteristics

If impulse noise is superimposed onto AC power while the input LED is off, the output triac may come on unexpectedly. Impulse noise V_N denotes the impulse peak voltage V_N at which a superimposed impulse t_N (normally of width 1 μs) forces the triac to switch on. Impulse noise malfunction is attributed to the combined impact of breakdown current and charging current in the capacitance portion of PN junction due to dV/dt. It cannot be prevented with a (C_s + R_s) snubber circuit.

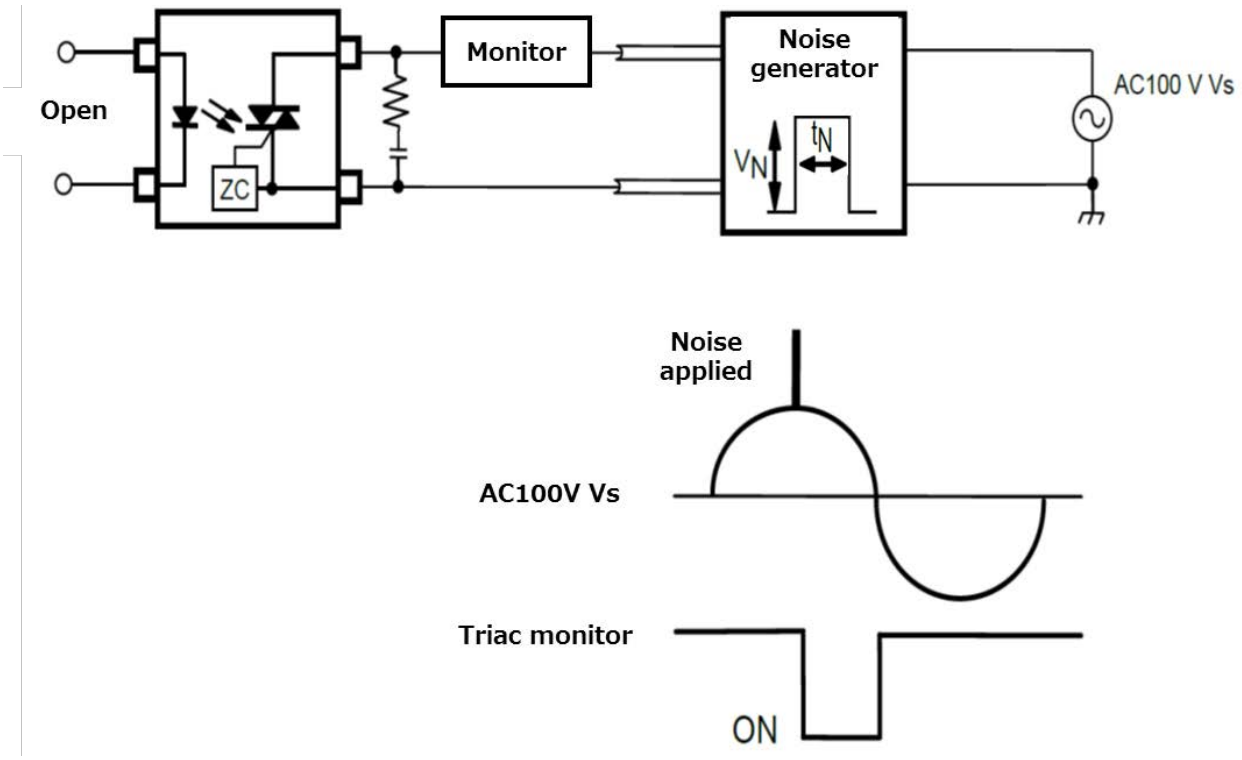

Figure 10.10.1 Impulse noise malfunction

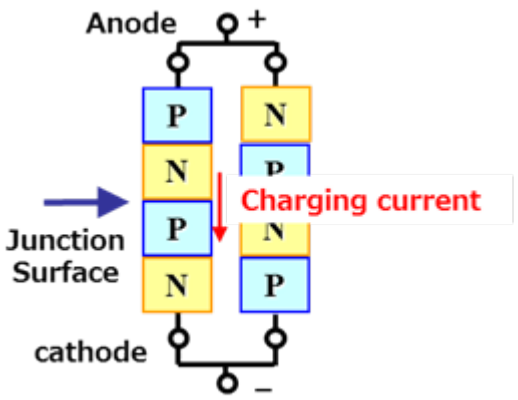

Figure 10.10.2 Charging current in triac attributable to impulse noise

10.11 Holding current I_H

After the triac switches on in response to on-state input LED, the triac self holding feature maintains the on state even if the LED subsequently switches off. If a drop in the peak voltage of the AC half-cycle causes the current to the triac to fall below the holding current threshold I_H, the self hold is released and the triac switches off. Note that I_H is inversely proportion to temperature.

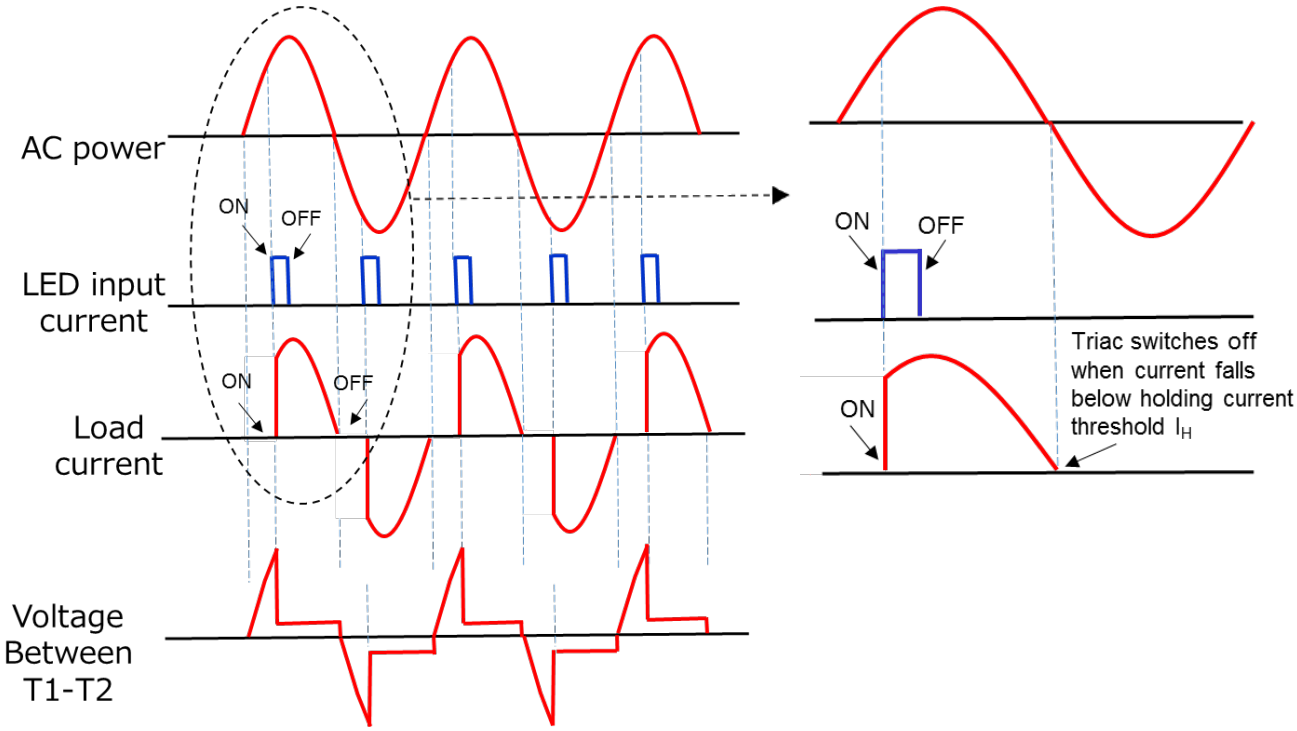

Figure 10.11.1 Current drops below holding current threshold, triac coupler switches off

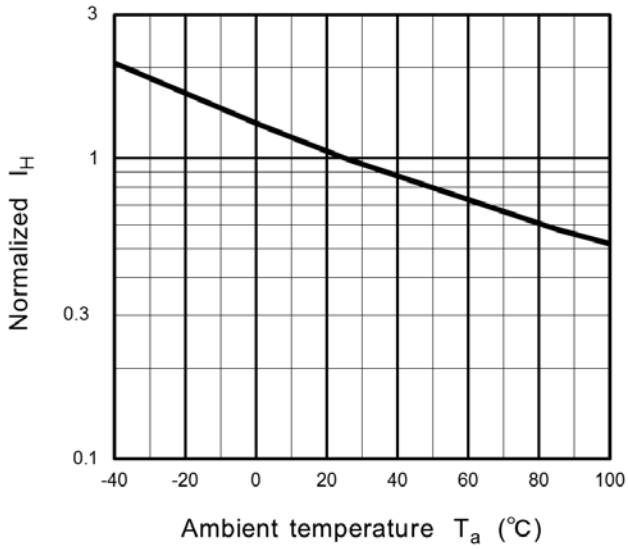

Figure 10.11.2 I_H vs. T_a

10.12 RMS On-state current I_T

On-state current I_T to the output side triac is defined in the maximum rating. The rated allowance value is temperature dependent, as per the RMS On-state current curve below.

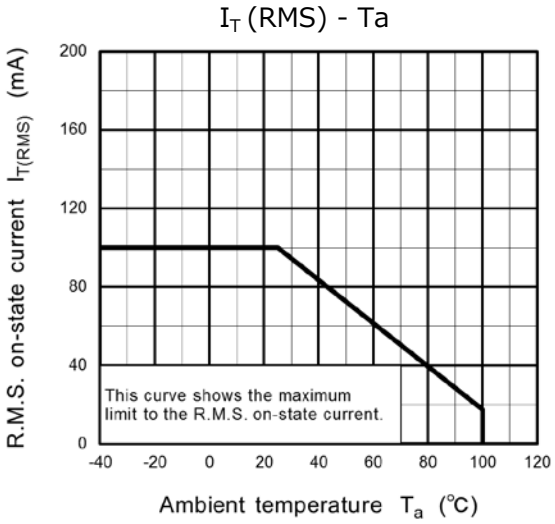

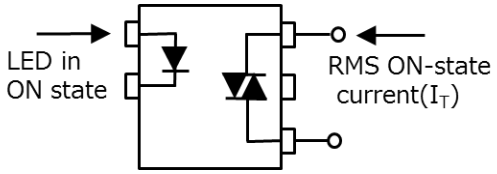

Figure 10.12.1 Allowable on-state current I_T vs. T_a

10.13 Pulse on-state current I_{TP}

Where the triac coupler is used as the trigger device to drive the main triac gate, pulse current flows to the photo-triac until such time as the main triac switches on. The AC power current generated in each half-cycle is defined by a maximum rated value. For example, the TLP560G is rated at I_{TP} (MAX) = 2A for a 100 μs pulse at 120 pps.

10.14 Peak non-repetitive surge current I_{TSM}

Where a triac coupler is used to drive inductive and capacitive loads, the initially low impedance can lead to significant rush current when the triac coupler switches on. Since the rush current may exceed the rated on-state current I_T, it is given a maximum rating known as Peak non-repetitive surge current I_{TSM}. The TLP560G is rated at I_{TSM} (MAX) = 1.2 A for Pw = 10 ms.

11. Typical triac coupler application circuit

This section shows a typical triac coupler basic applied circuit and associated application.

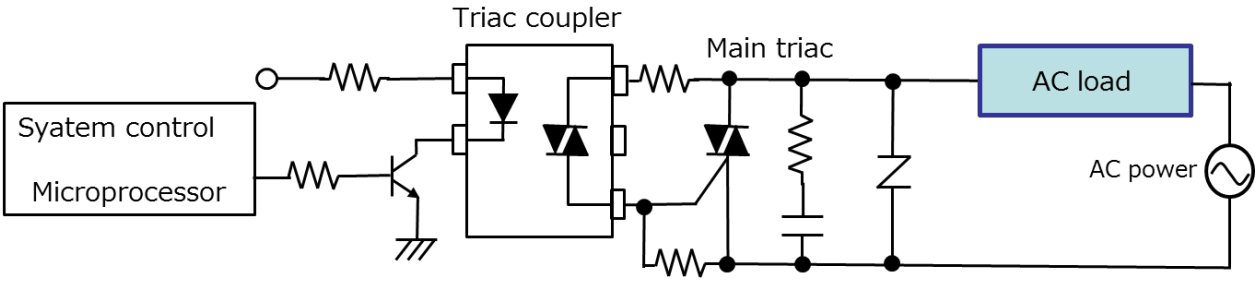

Figure 11.1.1 Basic applied circuit

Use	Element/device	Application (AC load)
Home	Air conditioner	Valves (two-way, four-way)
	Refrigerator	Defrosting heater, ice maker
	Washing machine	Solenoid valves, drying heater, motor valve and pump
	IH cooking heater	Heating element, fan motor
	Temperature regulator	Heater/heating element
	Dishwasher	Drainage valve, water inlet valve, drying fan
	Microwave	Heating and cooling fans
	Heated toilet seat with wash function	Seat heater, water heater, air heater
	Hot water service	Solenoid valves, circulating pump
	Dimmer switch	Light bulb
Industrial	Smart meter	Solenoid valves
	PLC	Output module
Office	Printer	Ink fixing heater regulator

Table 11.1.1 Applications

12. (Reference) Thyristor coupler applications

12.1 Uses for thyristor couplers

Two thyristor couplers in antiparallel configuration are sometimes used instead of a triac coupler for load control. Although this requires more components, it eliminates the problem of commutation dV/dt associated with triac couplers.

12.2 Operating principles of the thyristor coupler

A thyristor coupler comprises an LED on the input side and a PNPN junction photo-thyristor element on the output side.
The thyristor element normally switches on when current is applied to the gate terminal. Light from the LED is converted to photoelectric current at the PN junction surface, which then becomes gate current that causes the thyristor element to switch on.
A thyristor provides on/off current switching in one direction only. However multiple thyristors can be configured in antiparallel to provide the same functionality as a triac element, including on-off current switching for AC-powered loads in both directions.

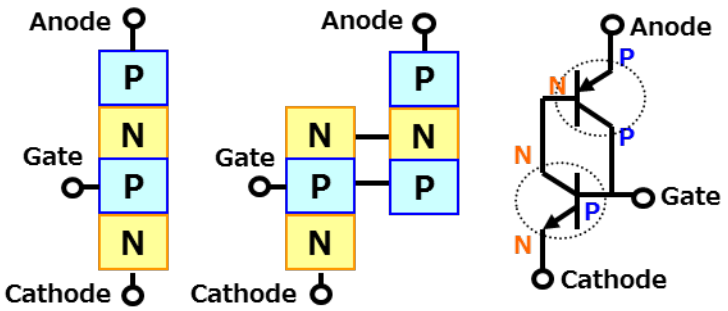

Figure 12.2.1 Equivalent circuit for thyristor element

12.3 (Reference) Basic application circuit with thyristor coupler

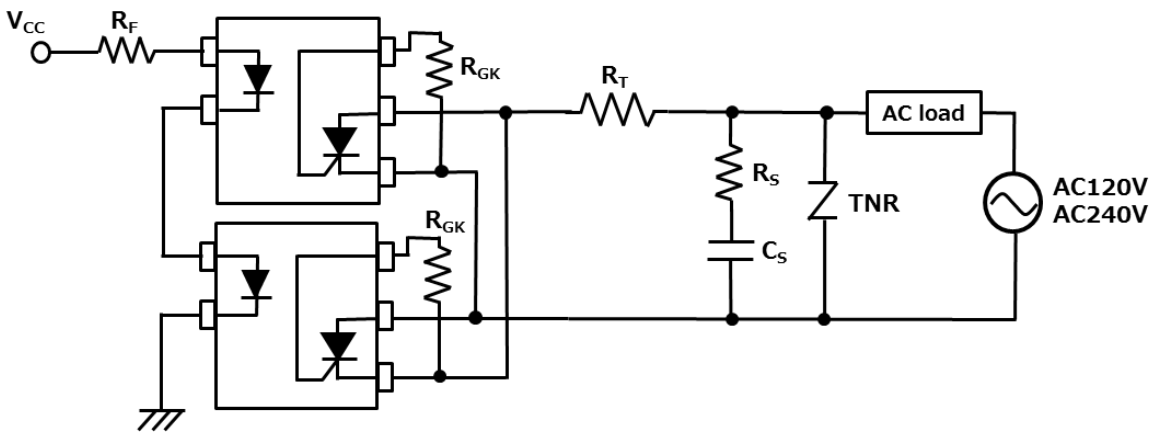

Figure 12.3.1 AC load control using thyristors in antiparallel configuration

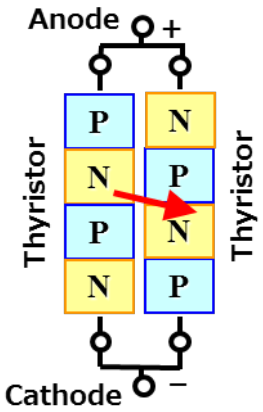

The two thyristors are on the same chip. In the event of reverse current, the minority carrier can cause a commutation dV/dt malfunction

Figure 12.3.2 Triac structure

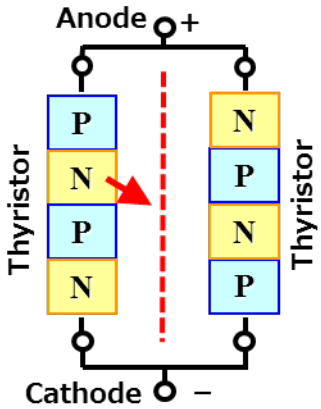

The two thyristors are independent of one another and therefore not impacted by minority carrier associated with reverse current

Figure 12.3.3 Thyristors in antiparallel

13. FAQ

No.	Topic	Question	Answer
1	Product comparison	What are the key considerations when replacing a conventional mechanical relay with a triac coupler?	A triac coupler is a semiconductor device and as such produces leak current I_{DRM} in the off state. Depending on the temperature, the leak current could be sufficient to cause malfunction in the load or main triac. There is also the possibility of dV/dt and commutation dV/dt malfunction. Refer to Sections 10.7, 10.8 and 10.9.
2		What is the key difference between a triac coupler and a photorelay?	A photorelay can be controlled by LED signal in both on and off directions. A triac coupler is designed to maintain a holding current in the triac once it switches on. The triac coupler remains in the on state for as long as the holding current stays at the required level—even if the LED signal switches off. Thus, a triac coupler cannot be switched off with LED signal.
3		What are the key differences between a triac coupler and an SSR (solid state relay)?	A triac coupler is a type of photocoupler used primarily as a triac trigger. A solid state relay (SSR) is a relay consisting of multiple components: typically a triac coupler, main triac, resistor and capacitor. A triac coupler can be used for on/off load switching but only for current of up to 100 mA. For current above 100 mA, an SSR is required.
4	Applications	What are triac couplers typically used for?	Triac couplers are commonly used in solid state relays (SSR) and heater control circuits in industrial machinery and household appliances (see Section 11 for examples). Thyristor couplers are sometimes used for overvoltage protection in switching power applications.
5	Choosing a triac coupler	When would a thyristor coupler be used instead of a triac coupler?	A triac coupler consists of thyristor elements arranged in equivalent antiparallel configuration. Triac couplers allow full-wave AC power control, whereas thyristor couplers provide half-wave on/off switching control only. Full-wave triac control can lead to malfunction, depending on the commutation dV/dt characteristics, although this can be prevented by using a triac coupler with two thyristor couplers in equivalent antiparallel configuration.
6		What is the difference between a zero-cross and a non-zero-cross triac coupler?	Zero-cross triac couplers do not switch on when the AC power is at high voltage. Non-zero-cross triac couplers are independent of AC power phase and can switch on at any voltage. Zero-cross triac couplers are good for blocking radio noise since they do not switch on at high voltage. Conversely, they cannot be used for phase control because they switch on during the low-voltage phase only. Refer to Sections 10.1, 10.2 and 10.3.

No.	Topic	Question	Answer
7	Choosing a triac coupler	What is the significance of the voltage rating (400 V, 600 V or 800 V)?	Normally a 400 V triac coupler is recommended for AC 100 – 120 V applications, based on the anticipated peak AC power and voltage fluctuation. For AC 200 – 240 V applications, a 600 V or 800 V triac coupler would be used. Since AC power is applied directly across the T1/T2 output terminals of the triac coupler, there needs to be a degree of physical separation between the terminals. The level of separation depends on factors such as the power supply voltage and the operating environment, and this in turn determines whether an SO6 or DIP6 package is used.
8	Design	Should the maximum trigger LED current I_{FT} value shown on the data sheet be used as the maximum allowable LED current I_F in the circuit design?	The threshold value I_{FT} of current to the LED that causes the triac to switch on can vary depending on the product. Every product has a guaranteed maximum variation, denoted I_{FT} (MAX). The I_F design value should be greater than I_{FT} to accommodate factors such as LED life and operating temperature as well as the design margins. The maximum rated I_F value includes an allowance for temperature derating and as such should not be exceeded. Refer to Section 9.1.
9		Triac couplers are often ranked by trigger current. What does this mean in terms of product selection?	The trigger LED current I_{FT}—the threshold point where the triac switches on as the LED current rises—can vary depending on the product. Where I_{FT} is shown on the data sheet as 10 mA (MAX), the trigger LED current will be no greater than 10 mA. IFT7 rank (trigger current up to 7 mA) is suitable for low-current applications. Temperature characteristics and the life of the LED must be taken into account in the design I_F value. Refer to Section 9.1.
10		What is the meaning of the maximum inhibit voltage (zero-cross voltage) shown on the data sheet for a zero-cross triac?	The zero-cross voltage varies depending on the product. Inhibit Voltage (MAX) denotes the guaranteed maximum zero-cross voltage. A lower inhibit voltage reduces the switch-on rush current but also limits the on time.
11		What are the key considerations when using a triac coupler for load phase control?	Only non-zero-cross triacs can be used for phase control; zero-cross triacs cannot. Phase control requires pulse current rather than DC current to the LED. The pulse width must be longer than the triac on time. Also, triac on time decreases as the LED current increases. So the design must take into consideration both the width and the size of the pulse current to the LED.
12		Do triac coupler performance characteristics degrade over time?	LEDs are known to degrade if subjected to prolonged usage; the light output gradually declines while the I_{FT} value gets progressively higher. A higher initial I_F value is recommended in order to ensure that it remains above the I_{FT} value beyond the end of the design period.

No.	Topic	Question	Answer
13	Design	What is the purpose of the gate-cathode resistor R_{GK} in the main triac of the applied circuit?	The resistor R_{GK} prevents main triac malfunctions associated with noise. Some types of main triac have a built in R_{GK} (typically 100 Ω), in which case an additional R_{GK} may not be required. Generally a 47 Ω R_{GK} value (i.e. below 100 Ω) is considered sufficient. If unsure check the main triac specifications.
14		What is the purpose of the gate terminals on a thyristor coupler?	The thyristor element on the output side has high sensitivity and is therefore susceptible to noise malfunction. A resistor R_{GK} between gate and cathode (recommended 27 kΩ) can reduce sensitivity to help prevent malfunction.
15	Circuit constants	How do you determine the constants for a triac snubber circuit?	Recommended values are R_S = 47 Ω and C_S = 0.033 μF for 100 V AC load applications and R_S = 100 Ω and C_S = 0.1 μF for 200 V AC load applications. Refer to Section 9.6.
16		Is a current limiting resistor R_T connected in series to the triac required when a triac coupler is used to drive the main triac? How is the required R_T value calculated?	When a triac coupler is used as the trigger device for the main triac, load current flows directly to the triac coupler until the main triac switches on. A zero-cross triac maintains a low voltage during the on period, which means that a current limiting resistor R_T is not required. A non-zero-cross triac has higher current (the pulse-on current (I_{TP}) so the resistance has to keep the current level below the maximum rated value (such as 2 A). As a general rule, the current should not exceed 50% of the rated value. Resistance of 100 Ω is recommended for 100 V AC power and 200 Ω for 200 V AC power. Section 9.5 shows the R_T design calculation procedure.
17	Usage	Can a triac coupler be used for on-off control of high-frequency signal?	Triac couplers are designed for on/off switching of commercial power and as such are unsuitable for high-frequency signal. High frequencies are characterized by rapid voltage rise and fall, with a voltage gradient that can generate current within the capacitance components of the triac and cause malfunction.
18		Can a triac coupler be used for load control with square wave power rather than sine wave (AC) power on the load side?	Triac couplers are designed for on/off load switching with sine wave power at commercial frequency (50/60 Hz). Square wave power is not recommended as it contains high-frequency components that can lead to malfunction.
19		Does chattering in the input LED signal of a triac coupler affect on/off load switching?	If the pulse width of the waveform of the LED signal chattering is 1 μs or less, the triac cannot track it and so there is little impact on load switching. For a zero-cross triac, it cannot switch on below the zero-cross voltage (inhibit voltage), so there is no risk of accidental switch-on malfunction during zero crossing.

14. Revision history

Version	Date	Page reference	Details
Rev. 1.0	2018-07-31	-	Created

RESTRICTIONS ON PRODUCT USE

Toshiba Corporation and its subsidiaries and affiliates are collectively referred to as “TOSHIBA”.
Hardware, software and systems described in this document are collectively referred to as “Product”.

- TOSHIBA reserves the right to make changes to the information in this document and related Product without notice.

- This document and any information herein may not be reproduced without prior written permission from TOSHIBA. Even with TOSHIBA's written permission, reproduction is permissible only if reproduction is without alteration/omission.

- Though TOSHIBA works continually to improve Product's quality and reliability, Product can malfunction or fail. Customers are responsible for complying with safety standards and for providing adequate designs and safeguards for their hardware, software and systems which minimize risk and avoid situations in which a malfunction or failure of Product could cause loss of human life, bodily injury or damage to property, including data loss or corruption. Before customers use the Product, create designs including the Product, or incorporate the Product into their own applications, customers must also refer to and comply with (a) the latest versions of all relevant TOSHIBA information, including without limitation, this document, the specifications, the data sheets and application notes for Product and the precautions and conditions set forth in the "TOSHIBA Semiconductor Reliability Handbook" and (b) the instructions for the application with which the Product will be used with or for. Customers are solely responsible for all aspects of their own product design or applications, including but not limited to (a) determining the appropriateness of the use of this Product in such design or applications; (b) evaluating and determining the applicability of any information contained in this document, or in charts, diagrams, programs, algorithms, sample application circuits, or any other referenced documents; and (c) validating all operating parameters for such designs and applications. **TOSHIBA ASSUMES NO LIABILITY FOR CUSTOMERS' PRODUCT DESIGN OR APPLICATIONS.**

- **PRODUCT IS NEITHER INTENDED NOR WARRANTED FOR USE IN EQUIPMENTS OR SYSTEMS THAT REQUIRE EXTRAORDINARILY HIGH LEVELS OF QUALITY AND/OR RELIABILITY, AND/OR A MALFUNCTION OR FAILURE OF WHICH MAY CAUSE LOSS OF HUMAN LIFE, BODILY INJURY, SERIOUS PROPERTY DAMAGE AND/OR SERIOUS PUBLIC IMPACT ("UNINTENDED USE").** Except for specific applications as expressly stated in this document, Unintended Use includes, without limitation, equipment used in nuclear facilities, equipment used in the aerospace industry, medical equipment, equipment used for automobiles, trains, ships and other transportation, traffic signaling equipment, equipment used to control combustions or explosions, safety devices, elevators and escalators, devices related to electric power, and equipment used in finance-related fields. **IF YOU USE PRODUCT FOR UNINTENDED USE, TOSHIBA ASSUMES NO LIABILITY FOR PRODUCT.** For details, please contact your TOSHIBA sales representative.

- Do not disassemble, analyze, reverse-engineer, alter, modify, translate or copy Product, whether in whole or in part.

- Product shall not be used for or incorporated into any products or systems whose manufacture, use, or sale is prohibited under any applicable laws or regulations.

- The information contained herein is presented only as guidance for Product use. No responsibility is assumed by TOSHIBA for any infringement of patents or any other intellectual property rights of third parties that may result from the use of Product. No license to any intellectual property right is granted by this document, whether express or implied, by estoppel or otherwise.

- **ABSENT A WRITTEN SIGNED AGREEMENT, EXCEPT AS PROVIDED IN THE RELEVANT TERMS AND CONDITIONS OF SALE FOR PRODUCT, AND TO THE MAXIMUM EXTENT ALLOWABLE BY LAW, TOSHIBA (1) ASSUMES NO LIABILITY WHATSOEVER, INCLUDING WITHOUT LIMITATION, INDIRECT, CONSEQUENTIAL, SPECIAL, OR INCIDENTAL DAMAGES OR LOSS, INCLUDING WITHOUT LIMITATION, LOSS OF PROFITS, LOSS OF OPPORTUNITIES, BUSINESS INTERRUPTION AND LOSS OF DATA, AND (2) DISCLAIMS ANY AND ALL EXPRESS OR IMPLIED WARRANTIES AND CONDITIONS RELATED TO SALE, USE OF PRODUCT, OR INFORMATION, INCLUDING WARRANTIES OR CONDITIONS OF MERCHANTABILITY, FITNESS FOR A PARTICULAR PURPOSE, ACCURACY OF INFORMATION, OR NONINFRINGEMENT.**

- GaAs (Gallium Arsenide) is used in Product. GaAs is harmful to humans if consumed or absorbed, whether in the form of dust or vapor. Handle with care and do not break, cut, crush, grind, dissolve chemically or otherwise expose GaAs in Product.

- Do not use or otherwise make available Product or related software or technology for any military purposes, including without limitation, for the design, development, use, stockpiling or manufacturing of nuclear, chemical, or biological weapons or missile technology products (mass destruction weapons). Product and related software and technology may be controlled under the applicable export laws and regulations including, without limitation, the Japanese Foreign Exchange and Foreign Trade Law and the U.S. Export Administration Regulations. Export and re-export of Product or related software or technology are strictly prohibited except in compliance with all applicable export laws and regulations.

- Please contact your TOSHIBA sales representative for details as to environmental matters such as the RoHS compatibility of Product. Please use Product in compliance with all applicable laws and regulations that regulate the inclusion or use of controlled substances, including without limitation, the EU RoHS Directive. **TOSHIBA ASSUMES NO LIABILITY FOR DAMAGES OR LOSSES OCCURRING AS A RESULT OF NONCOMPLIANCE WITH APPLICABLE LAWS AND REGULATIONS.**

TOSHIBA ELECTRONIC DEVICES & STORAGE CORPORATION