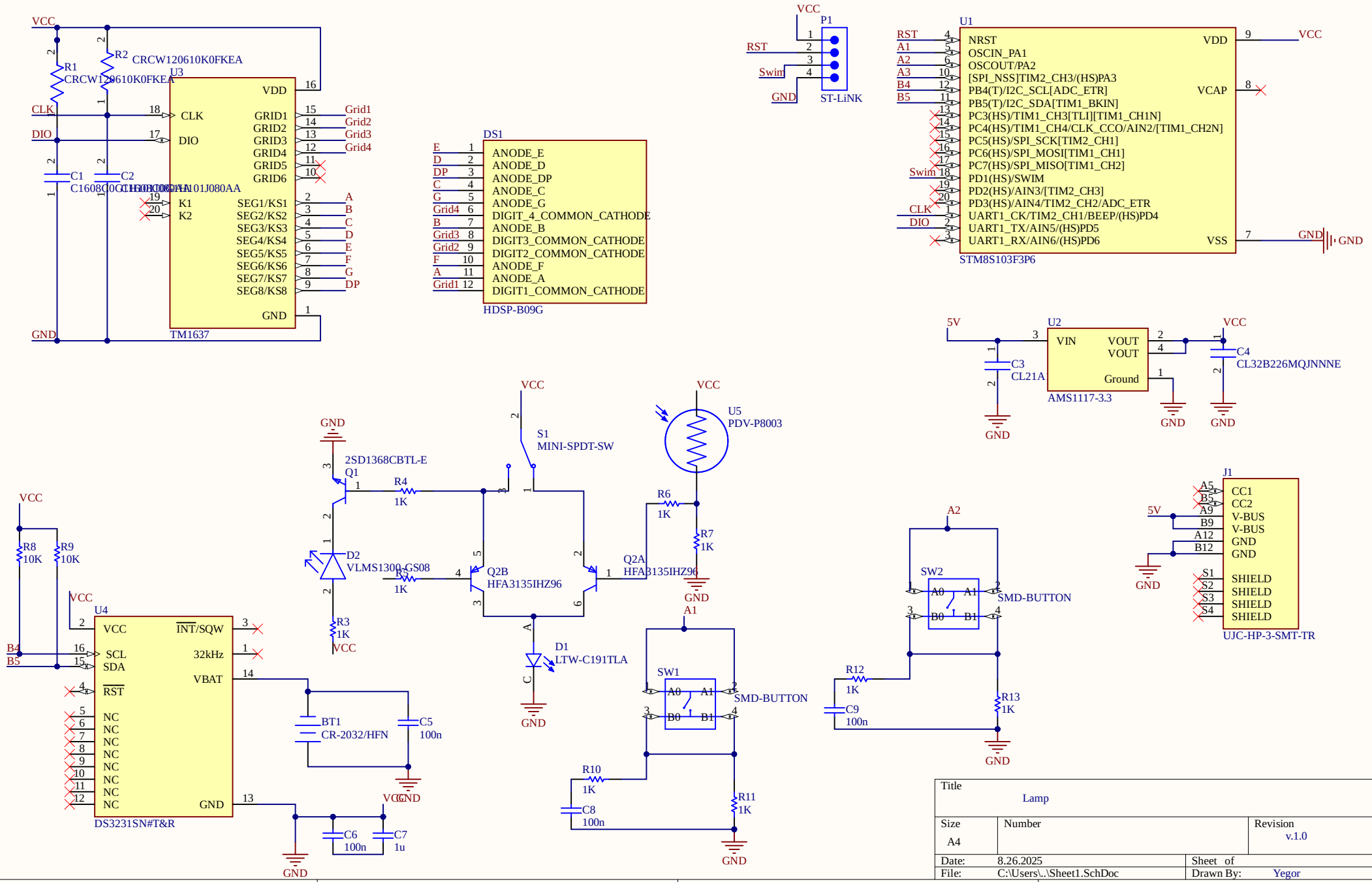
VCC
R1
CRCW120610K0FKEA
R2
CRCW120610K0FKEA
U3
CLK
DIO
C1
C2
C1608C0G1H101J080AA
C1608C0G1H101J080AA
VDD
CLK
DIO
K1
K2
GRID1
GRID2
GRID3
GRID4
GRID5
GRID6
SEG1/KS1
SEG2/KS2
SEG3/KS3
SEG4/KS4
SEG5/KS5
SEG6/KS6
SEG7/KS7
SEG8/KS8
GND
TM1637
Grid1
Grid2
Grid3
Grid4
A
B
C
D
E
F
G
DP
GND
DS1
ANODE_E
ANODE_D
ANODE_DP
ANODE_C
ANODE_G
DIGIT_4_COMMON_CATHODE
ANODE_B
DIGIT3_COMMON_CATHODE
DIGIT2_COMMON_CATHODE
ANODE_F
ANODE_A
DIGIT1_COMMON_CATHODE
HDSP-B09G
P1
RST
Swim
GND
ST-LiNK
U1
NRST
OSCIN_PA1
OSCOUT/PA2
[SPI_NSS]TIM2_CH3/(HS)PA3
PB4(T)/I2C_SCL[ADC_ETR]
PB5(T)/I2C_SDA[TIM1_BKIN]
PC3(HS)/TIM1_CH3[TLI][TIM1_CH1N]
PC4(HS)/TIM1_CH4/CLK_CCO/AIN2/[TIM1_CH2N]
PC5(HS)/SPI_SCK[TIM2_CH1]
PC6(HS)/SPI_MOSI[TIM1_CH1]
PC7(HS)/SPI_MISO[TIM1_CH2]
PD1(HS)/SWIM
PD2(HS)/AIN3/[TIM2_CH3]
PD3(HS)/AIN4/TIM2_CH2/ADC_ETR
UART1_CK/TIM2_CH1/BEEP/(HS)PD4
UART1_TX/AIN5/(HS)PD5
UART1_RX/AIN6/(HS)PD6
VDD
VCAP
VSS
STM8S103F3P6
5V
U2
VIN
VOUT
VOUT
Ground
AMS1117-3.3
C3
CL21A
C4
CL32B226MQJNNNE
S1
MINI-SPDT-SW
U5
PDV-P8003
2SD1368CBTL-E
Q1
R4
1K
D2
VLMS1300-GS08
R5
1K
Q2B
HFA3135IHZ96
Q2A
HFA3135IHZ96
R6
1K
R7
1K
R3
1K
D1
LTW-C191TLA
A1
SW1
SMD-BUTTON
R10
1K
C8
100n
R11
1K
A2
SW2
SMD-BUTTON
R12
1K
C9
100n
R13
1K
J1
CC1
CC2
V-BUS
V-BUS
GND
GND
SHIELD
SHIELD
SHIELD
SHIELD
UJC-HP-3-SMT-TR
R8
10K
R9
10K
U4
VCC
SCL
SDA
RST
INT/SQW
32kHz
VBAT
NC
GND
DS3231SN#T&R
BT1
CR-2032/HFN
C5
100n
C6
100n
C7
1u
Title
Lamp
Size
A4
Number
Revision
v.1.0
Date:
8.26.2025
Sheet of
File:
C:\Users\..\Sheet1.SchDoc
Drawn By:
Yegor