Spanning Tree Protocol Lab

Topology

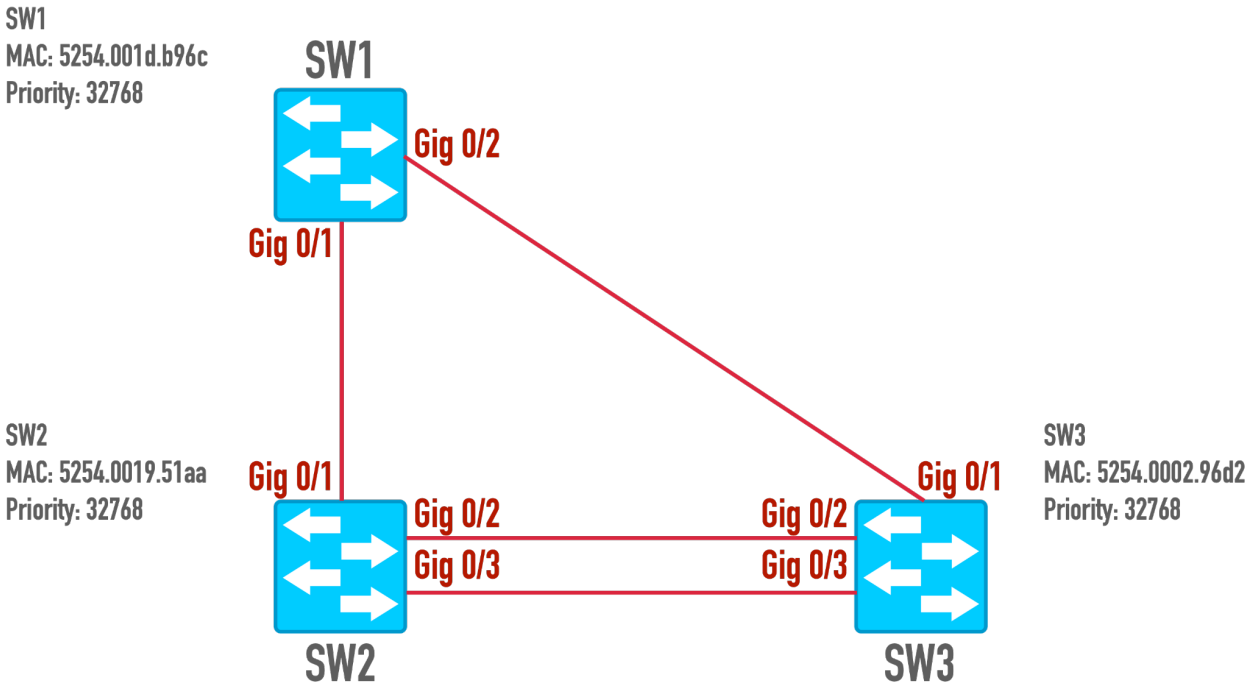

(Note: The MAC addresses seen within the topology above will not match the MAC addresses of your topology. Therefore, we will begin with a practice exercise, analyzing the STP topology shown.)

Spanning Tree Protocol Exercise

Using topology information, answer the following questions:

- Which switch is the root bridge?
  - This is the switch with the lowest Bridge ID.
    - ⇒ This is made up of the Bridge Priority and the Bridge MAC Address.
  - If the priorities are all the same, then the Root Bridge is decided by the lowest MAC Address.
- Which ports are the root ports?
  - The one (and only one) port on a non-Root Bridge that's closest to the Root Bridge, in terms of cost.

Copyright 2024, Kevin Wallace Training, LLC

- Which ports are the designated ports?
    - The one (and only one) port on each segment that is closest to the Root Bridge in terms of cost.
- Which ports are the blocking ports?
    - A port that is administratively enabled, but is not a Root Port nor a Designated Port.

Solution

Step 1: Which switch is the root bridge?

```
SW1>enable
SW1#show spanning-tree

VLAN0001
  Spanning tree enabled protocol ieee
  Root ID    Priority    32769
             Address     5254.0002.96d2
             Cost        4
             Port        3 (GigabitEthernet0/2)
             Hello Time   2 sec  Max Age 20 sec  Forward Delay 15 sec

  Bridge ID  Priority    32769  (priority 32768 sys-id-ext 1)
             Address     5254.001d.b96c
             Hello Time   2 sec  Max Age 20 sec  Forward Delay 15 sec
             Aging Time  300 sec
```

```
SW2>enable
SW2#show spanning-tree

VLAN0001
  Spanning tree enabled protocol ieee
  Root ID    Priority    32769
             Address     5254.0002.96d2
             Cost        4
             Port        3 (GigabitEthernet0/2)
             Hello Time   2 sec  Max Age 20 sec  Forward Delay 15 sec

  Bridge ID  Priority    32769  (priority 32768 sys-id-ext 1)
             Address     5254.0019.51aa
             Hello Time   2 sec  Max Age 20 sec  Forward Delay 15 sec
             Aging Time  300 sec
```

```
SW3>enable
SW3#show spanning-tree

VLAN0001
  Spanning tree enabled protocol ieee
  Root ID    Priority    32769
             Address     5254.0002.96d2
             This bridge is the root
             Hello Time   2 sec  Max Age 20 sec  Forward Delay 15 sec

  Bridge ID  Priority    32769  (priority 32768 sys-id-ext 1)
             Address     5254.0002.96d2
             Hello Time   2 sec  Max Age 20 sec  Forward Delay 15 sec
             Aging Time  300 sec
```

Copyright 2024, Kevin Wallace Training, LLC

Step 2: Which ports are the root ports?

SW1#**show spanning-tree**

```
VLAN0001
  Spanning tree enabled protocol ieee
  Root ID    Priority    32769
             Address     5254.0002.96d2
             Cost        4
             Port        3 (GigabitEthernet0/2)
             Hello Time   2 sec  Max Age 20 sec  Forward Delay 15 sec

  Bridge ID  Priority    32769  (priority 32768 sys-id-ext 1)
             Address     5254.001d.b96c
             Hello Time   2 sec  Max Age 20 sec  Forward Delay 15 sec
             Aging Time  300 sec

Interface           Role Sts Cost      Prio.Nbr Type
------------------- ---- --- --------- -------- --------------------------------
Gi0/1               Altn BLK 4         128.2    P2p
Gi0/2               Root FWD 4         128.3    P2p
```

SW2#**show spanning-tree**

```
VLAN0001
  Spanning tree enabled protocol ieee
  Root ID    Priority    32769
             Address     5254.0002.96d2
             Cost        4
             Port        3 (GigabitEthernet0/2)
             Hello Time   2 sec  Max Age 20 sec  Forward Delay 15 sec

  Bridge ID  Priority    32769  (priority 32768 sys-id-ext 1)
             Address     5254.0019.51aa
             Hello Time   2 sec  Max Age 20 sec  Forward Delay 15 sec
             Aging Time  300 sec

Interface           Role Sts Cost      Prio.Nbr Type
------------------- ---- --- --------- -------- --------------------------------
Gi0/1               Desg FWD 4         128.2    P2p
Gi0/2               Root FWD 4         128.3    P2p
Gi0/3               Altn BLK 4         128.4    P2p
```

SW3#**show spanning-tree**

```
VLAN0001
  Spanning tree enabled protocol ieee
  Root ID    Priority    32769
             Address     5254.0002.96d2
             This bridge is the root
             Hello Time   2 sec  Max Age 20 sec  Forward Delay 15 sec

  Bridge ID  Priority    32769  (priority 32768 sys-id-ext 1)
             Address     5254.0002.96d2
             Hello Time   2 sec  Max Age 20 sec  Forward Delay 15 sec
             Aging Time  300 sec

Interface           Role Sts Cost      Prio.Nbr Type
------------------- ---- --- --------- -------- --------------------------------
Gi0/1               Desg FWD 4         128.2    P2p
Gi0/2               Desg FWD 4         128.3    P2p
Gi0/3               Desg FWD 4         128.4    P2p
```

Copyright 2024, Kevin Wallace Training, LLC

Step 3: Which ports are the designated ports?

SW1#**show spanning-tree**

```
VLAN0001
  Spanning tree enabled protocol ieee
  Root ID    Priority    32769
             Address     5254.0002.96d2
             Cost        4
             Port        3 (GigabitEthernet0/2)
             Hello Time   2 sec  Max Age 20 sec  Forward Delay 15 sec

  Bridge ID  Priority    32769  (priority 32768 sys-id-ext 1)
             Address     5254.001d.b96c
             Hello Time   2 sec  Max Age 20 sec  Forward Delay 15 sec
             Aging Time  300 sec

Interface           Role Sts Cost      Prio.Nbr Type
------------------- ---- --- --------- -------- --------------------------------
Gi0/1               Altn BLK 4         128.2    P2p
Gi0/2               Root FWD 4         128.3    P2p
```

SW2#**show spanning-tree**

```
VLAN0001
  Spanning tree enabled protocol ieee
  Root ID    Priority    32769
             Address     5254.0002.96d2
             Cost        4
             Port        3 (GigabitEthernet0/2)
             Hello Time   2 sec  Max Age 20 sec  Forward Delay 15 sec

  Bridge ID  Priority    32769  (priority 32768 sys-id-ext 1)
             Address     5254.0019.51aa
             Hello Time   2 sec  Max Age 20 sec  Forward Delay 15 sec
             Aging Time  300 sec

Interface           Role Sts Cost      Prio.Nbr Type
------------------- ---- --- --------- -------- --------------------------------
Gi0/1               Desg FWD 4         128.2    P2p
Gi0/2               Root FWD 4         128.3    P2p
Gi0/3               Altn BLK 4         128.4    P2p
```

SW3#**show spanning-tree**

```
VLAN0001
  Spanning tree enabled protocol ieee
  Root ID    Priority    32769
             Address     5254.0002.96d2
             This bridge is the root
             Hello Time   2 sec  Max Age 20 sec  Forward Delay 15 sec

  Bridge ID  Priority    32769  (priority 32768 sys-id-ext 1)
             Address     5254.0002.96d2
             Hello Time   2 sec  Max Age 20 sec  Forward Delay 15 sec
             Aging Time  300 sec

Interface           Role Sts Cost      Prio.Nbr Type
------------------- ---- --- --------- -------- --------------------------------
Gi0/1               Desg FWD 4         128.2    P2p
Gi0/2               Desg FWD 4         128.3    P2p
Gi0/3               Desg FWD 4         128.4    P2p
```

Copyright 2024, Kevin Wallace Training, LLC

Step 4: Which ports are the blocking ports?

SW1#**show spanning-tree**

```
VLAN0001
  Spanning tree enabled protocol ieee
  Root ID    Priority    32769
             Address     5254.0002.96d2
             Cost        4
             Port        3 (GigabitEthernet0/2)
             Hello Time   2 sec  Max Age 20 sec  Forward Delay 15 sec

  Bridge ID  Priority    32769  (priority 32768 sys-id-ext 1)
             Address     5254.001d.b96c
             Hello Time   2 sec  Max Age 20 sec  Forward Delay 15 sec
             Aging Time  300 sec

Interface           Role Sts Cost      Prio.Nbr Type
------------------- ---- --- --------- -------- --------------------------------
Gi0/1               Altn BLK 4         128.2    P2p
Gi0/2               Root FWD 4         128.3    P2p
```

SW2#**show spanning-tree**

```
VLAN0001
  Spanning tree enabled protocol ieee
  Root ID    Priority    32769
             Address     5254.0002.96d2
             Cost        4
             Port        3 (GigabitEthernet0/2)
             Hello Time   2 sec  Max Age 20 sec  Forward Delay 15 sec

  Bridge ID  Priority    32769  (priority 32768 sys-id-ext 1)
             Address     5254.0019.51aa
             Hello Time   2 sec  Max Age 20 sec  Forward Delay 15 sec
             Aging Time  300 sec

Interface           Role Sts Cost      Prio.Nbr Type
------------------- ---- --- --------- -------- --------------------------------
Gi0/1               Desg FWD 4         128.2    P2p
Gi0/2               Root FWD 4         128.3    P2p
Gi0/3               Altn BLK 4         128.4    P2p
```

SW3#**show spanning-tree**

```
VLAN0001
  Spanning tree enabled protocol ieee
  Root ID    Priority    32769
             Address     5254.0002.96d2
             This bridge is the root
             Hello Time   2 sec  Max Age 20 sec  Forward Delay 15 sec

  Bridge ID  Priority    32769  (priority 32768 sys-id-ext 1)
             Address     5254.0002.96d2
             Hello Time   2 sec  Max Age 20 sec  Forward Delay 15 sec
             Aging Time  300 sec

Interface           Role Sts Cost      Prio.Nbr Type
------------------- ---- --- --------- -------- --------------------------------
Gi0/1               Desg FWD 4         128.2    P2p
Gi0/2               Desg FWD 4         128.3    P2p
Gi0/3               Desg FWD 4         128.4    P2p
```

Copyright 2024, Kevin Wallace Training, LLC

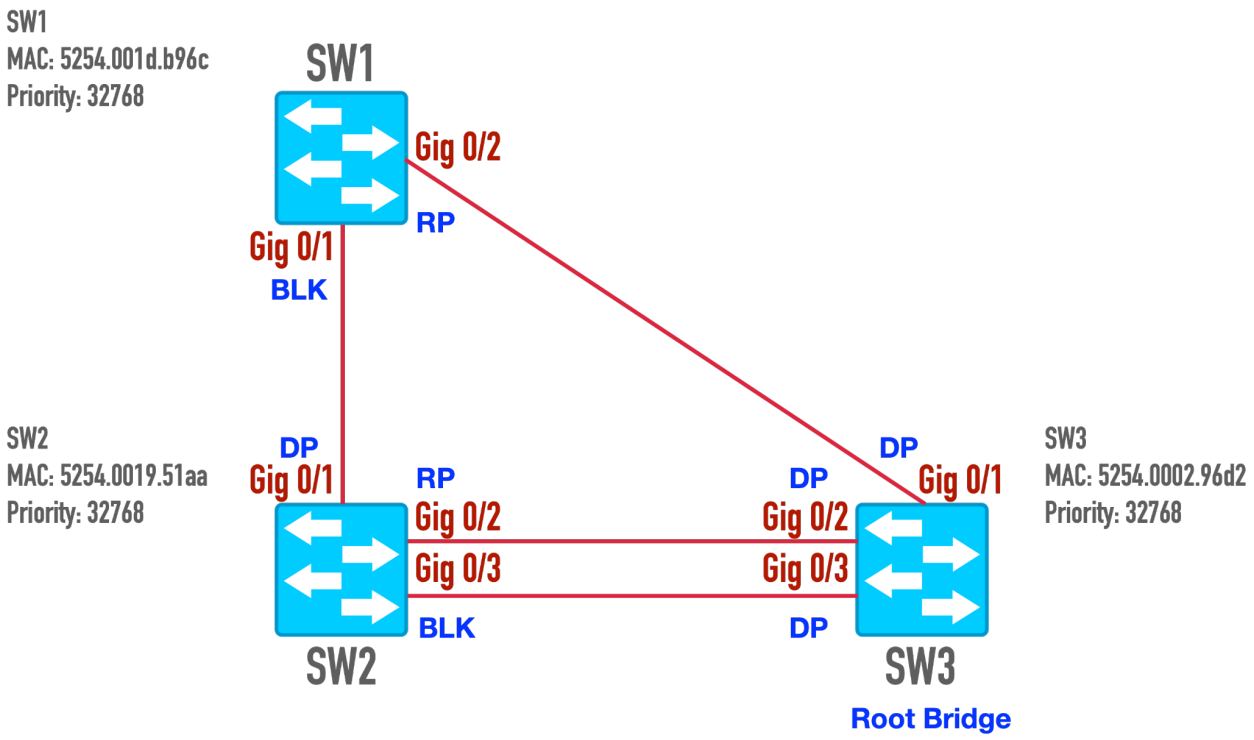

Put Your Skills to the Test!

(We challenge you to create your own topology, using the Initial Configuration Commands that follow, and go through the calculations and verifications yourself. Below is a topology that you can reference for your topology.)

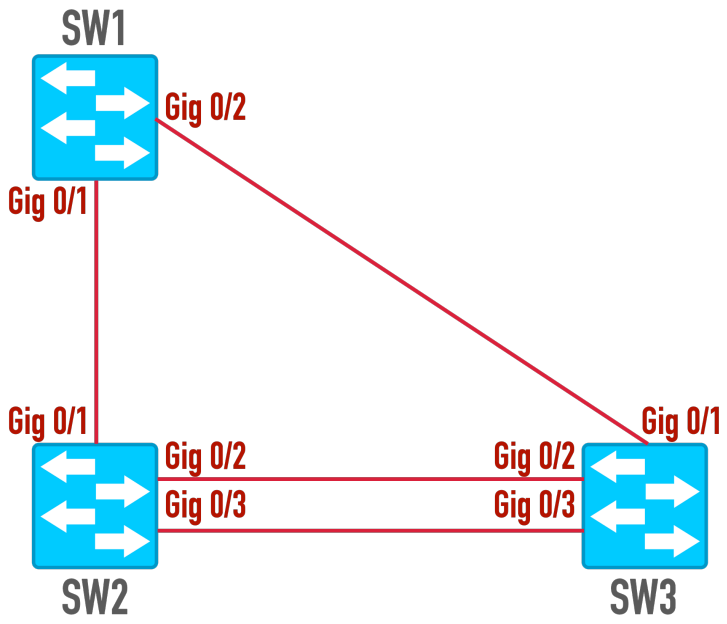

Copyright 2024, Kevin Wallace Training, LLC

Initial Configuration Commands

SW1:

```
enable
conf t
no ip domain-lookup
line con 0
logging synchronous
exec-timeout 0 0
hostname SW1
int gig 0/0
shutdown
int gig 0/3
shutdown
end
copy run star
```

SW2:

```
enable
conf t
no ip domain-lookup
line con 0
logging synchronous
exec-timeout 0 0
hostname SW2
int gig 0/0
shutdown
end
copy run star
```

SW3:

```
enable
conf t
no ip domain-lookup
line con 0
logging synchronous
exec-timeout 0 0
hostname SW3
int gig 0/0
shutdown
end
copy run star
```

Copyright 2024, Kevin Wallace Training, LLC