TE0802 TRM

Revision v.63

Exported on 2019-08-30

Online version of this document:

https://wiki.trenz-electronic.de/display/PD/TE0802+TRM

1 Table of Contents

1 Table of Contents ... 2
2 Table of Figures ... 4
3 Table of Tables ... 5
4 Overview ... 7
4.1 Key Features ... 7
4.2 Block Diagram ... 7
4.3 Main Components ... 9
4.4 Initial Delivery State ... 10
4.5 Configuration Signals ... 10
5 Signals, Interfaces and Pins ... 11
5.1 I/Os on Pin Headers and Connectors ... 11
5.2 Micro SD Card ... 11
5.3 RJ45 Connector ... 12
5.4 USBs Sockets ... 12
5.5 SSD M.2 Connector ... 13
5.6 Display Port Connector ... 14
5.7 D-Sub Connector ... 14
5.8 Headphone Connector ... 14
5.9 Grove Connector ... 15
5.10 Pmod Sockets ... 15
5.11 Test Points ... 15
6 On-board Peripherals ... 18
6.1 Quad SPI Flash Memory ... 18
6.2 LPDDR4 SDRAM ... 19
6.3 EEPROM ... 19
6.4 USB ULPI PHY ... 19
6.5 Ethernet PHY ... 20
6.6 FTDI FT2232H ... 22
6.7 Clock Generator ... 23
6.8 Clock Sources ... 24
6.9 7-Segment Display ... 24
6.10 User LED ... 25
6.11 Push Button ... 25
6.12 DIP Switch ... 26
7 Power and Power-On Sequence ... 28

Copyright © 2019 Trenz Electronic GmbH

7.1 Power Supply 28
7.2 Power Consumption 28
7.3 Power Distribution Dependencies 28
7.4 Power-On Sequence 28
7.5 Power Rails 29
7.6 Bank Voltages 29
8 Technical Specifications 30
8.1 Absolute Maximum Ratings 30
8.2 Recommended Operating Conditions 30
8.3 Physical Dimensions 30
9 Currently Offered Variants 31
10 Revision History 32
10.1 Hardware Revision History 32
10.2 Document Change History 32
11 Disclaimer 33
11.1 Data Privacy 33
11.2 Document Warranty 33
11.3 Limitation of Liability 33
11.4 Copyright Notice 33
11.5 Technology Licenses 33
11.6 Environmental Protection 33
11.7 REACH, RoHS and WEEE 33

Copyright © 2019 Trenz Electronic GmbH

2 Table of Figures

Figure 1: TE0802 Block Diagram 8
Figure 2: TE0802 Main Components (Picture shows Revision 01) 9
Figure 3: Power Distribution 28
Figure 4: Physical Dimension in mm 30
Figure 5: Board Hardware Revision Number 32

Copyright © 2019 Trenz Electronic GmbH

3 Table of Tables

Table 1: Initial Delivery State of Programmable Devices on the Module 10
Table 2: Boot Process 10
Table 3: Reset Process 10
Table 4: General I/O to Pin Header and Connectors Information 11
Table 5: Micro SD Card Connector Information 12
Table 6: RJ45 Connector Information 12
Table 7: USB2.0 B Socket Information 13
Table 8: USB3.0 A Socket Information 13
Table 9: SSD M.2 Connector Information 13
Table 10: Display Port Socket Information 14
Table 11: D-Sub Connector Information 14
Table 12: Headphone Connector Information 15
Table 13: Grove Connector Information 15
Table 14: Pmod SMD Host Socket Information 15
Table 15: Test Points Information 15
Table 16: On-board Peripherals 18
Table 17: Quad SPI Interface MIOs and Pins 18
Table 18: I2C FPGA EEPROM Interface MIOs and Pins 19
Table 19: I2C Address for FPGA EEPROM 19
Table 20: I2C FTDI EEPROM Interface Pins 19
Table 21: USB ULPI PHY Connections and Pins 20
Table 22: Ethernet PHY Connections and Pins 21
Table 23: FTDI Chip Interfaces and Pins 22
Table 24: Clock Generator Connections and Pins 23
Table 25: Oscillators 24
Table 26: 7-Segment LED Pins 24
Table 27: On-board LEDs 25
Table 28: On-board Push Buttons 25
Table 29: DIP Switches 26
Table 30: Power Consumption 28
Table 31: Module Power Rails 29
Table 32: SoC Bank Voltages 29
Table 33: Absolute Maximum Ratings 30
Table 34: Recommended Operating Conditions 30
Table 35: Trenz Electronic Shop Overview 31
Table 36: Hardware Revision History 32

Copyright © 2019 Trenz Electronic GmbH

Table 37: Document Change History 32

4 Overview

The Trenz Electronic TE0802 is a development board integrating a Xilinx Zynq UltraScale+ . Other assembly options for the FPGA and the memory chips are available. Please contact us for further information.

Refer to http://trenz.org/te0802-info for the current online version of this manual and other available documentation.

4.1 Key Features

- MPSoC: XCZU2CG - Xilinx Zynq UltraScale+ MPSoC
  - Package: 1SBVA484E
  - Speed Grade: -1 (Slowest)
  - Temperature Grade: Extended (0 to +100 °C)
- RAM/Storages:
  - SDRAM: LPDDR4 8Gb 256Mx16x 2
  - SPI Flash 256Mb (32M x 8) 133 MHz
  - EEPROMs 2Kb (256 x 8)
  - EEPROMs 4Kb (512 x 8)
- Interfaces:
  - USB JTAG/UART microUSB
  - 1GB Ethernet RJ45
  - USB 3.0 Host (Type A Connector)
  - microSD Card
  - M.2 SSD PCIe
  - 3.5 mm Earphone Jack (PWM Output)
  - Display Port
  - VGA
  - 4 Digit 7-Segment LED Display
  - 8 LEDs
  - 5 User Buttons
  - 8 Bit Slide Switches
  - Reset Button
  - 2x Pmod Connector
- Power
  - 5 V +/- 10%
  - ~3.5 W
- Dimension: 100mm x 100mm

4.2 Block Diagram

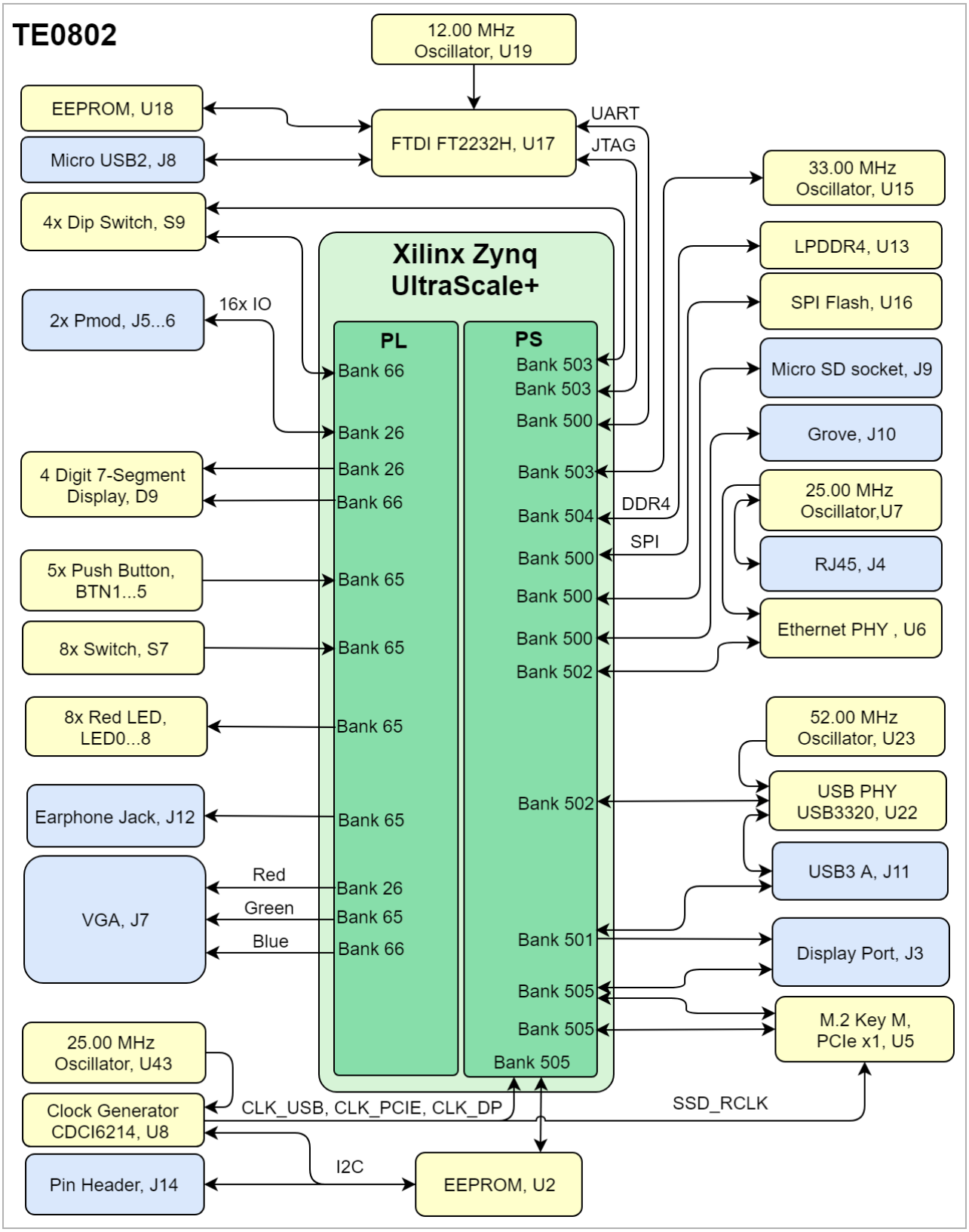

Figure 1: TE0802 Block Diagram

4.3 Main Components

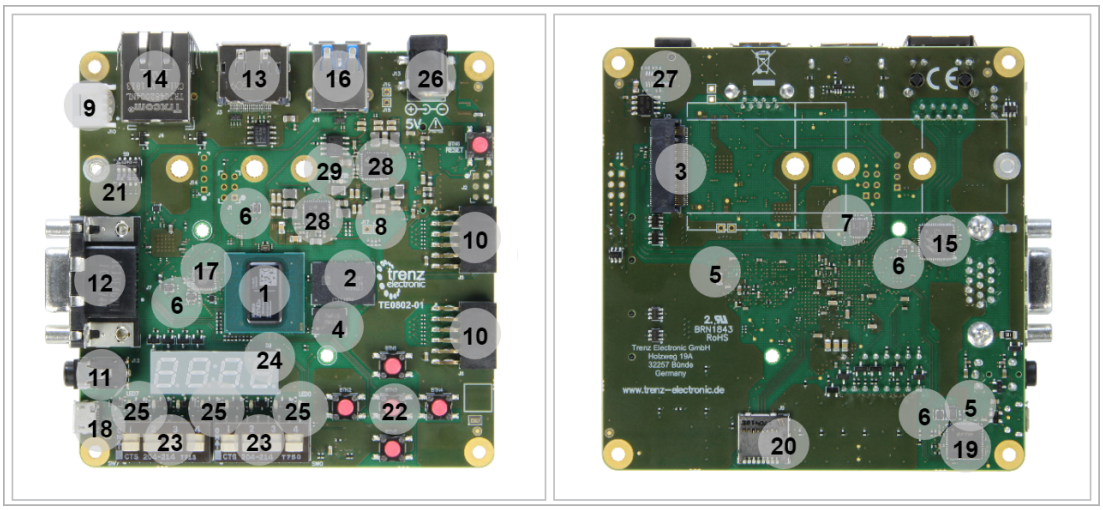

Figure 2: TE0802 Main Components (Picture shows Revision 01)

1. Xilinx Zynq UltraScale+ MPSoc, U14
2. LPDDR4 SDRAM, U13
3. M.2 Key M PCIe x1, U5
4. SPI Flash Memory, U16
5. EEPROM, U2, U18
6. Oscillator, U15, U7, U19, U23, U43
7. Clock Generator, U8
8. Clock Generator Programming Connector, J14
9. Grove Connector, J10
10. Pmod Host Socket, J5...6
11. Headphone Jack, J12
12. D-Sub Connector, J7
13. DisplayPort, J3
14. RJ45 Socket, J4
15. Ethernet PHY, U6
16. USB Type A, J11
17. USB 2.0 PHY, U22
18. Micro USB 2.0 Type B, J8
19. FTDI USB 2.0 to JTAG/UART Converter, U17
20. microSD Card, J9
21. Slide Switch, S1
22. Push Button, BTN1...5
23. DIP Switch, S7...8
24. 4 Digit 7-Segment LED Display, D9
25. 8x LEDs (Red), LED0...7
26. Power Jack, J13
27. Overvoltage/Undervoltage/Reverse Supply Protector, U12
28. Power Management Integrated Circuit (PMIC), U1, U9
29. Power Good LED (Green), D12

Copyright © 2019 Trenz Electronic GmbH

4.4 Initial Delivery State

Storage device name	Content	Notes
SPI Flash (U16)	Not programmed	
EEPROM (U2)	Not programmed	Except Ethernet MAC
EEPROM (U18)	Programmed	FTDI Configuration
LPDDR4 SDRAM (U13)	Not programmed	

Table 1: Initial Delivery State of Programmable Devices on the Module

4.5 Configuration Signals

Bootmode signals must be set through DIP Switch S9.

MODE Signal State	MODE1 S1-B	MODE0 S1-A	Boot Mode
MODE[2:0]=000	OFF	OFF	JTAG
MODE[2:0]=001	OFF	ON	not supported
MODE[2:0]=010	ON	OFF	QSPI(32 bit)
MODE[2:0]=011	ON	ON	SD0(2.0)

Table 2: Boot Process
Reset setting is available through Push Button BTN6.

Signal	Connected to	Note
POR_B	BTN6, Push Button	Connected to nRESET

Table 3: Reset Process

5 Signals, Interfaces and Pins

5.1 I/Os on Pin Headers and Connectors

FPGA bank number and number of I/O signals connected to the connectors:

FPGA Bank	Connector	I/O Signal Count	Voltage Level	Notes
Bank 503	Micro USB, J8 (over FTDI)	4 Single Ended	3.3 V	JTAG
Bank 500	Micro USB, J8 (over FTDI)	2 Single Ended	3.3 V	UART
Bank 500	Micro SD Card, J9	7 Single Ended	3.3 V	
Bank 502	ETH RJ45, J4 (over ETH PHY)	14 Single Ended	1.8 V	
Bank 505, 502	USB 3.0, J11 (USB2 over USB PHY)	2 Differential Pairs, 12 Single Ended	-- / 1.8V	
Bank 505, 501	SSD M.2, U5	2 Differential Pairs, 5 Single Ended	-- / 3.3 V	
Bank 505, 501	Display Port Connector, J3	2 Differential Pairs, 5 Single Ended	--/ 3.3 V	
Bank 26, 65, 66,	D-Sub Host Socket (VGA), J7	14 Single Ended	3.3 V / 1.8 V / 1.8 V	
Bank 65	Earphone, J12	3 Single Ended	1.8 V	
Bank 500	Grove Connector, J10	2 Single Ended	3.3 V	
Bank 26	Pmod Host Socket, J5	8 Single Ended	3.3 V	
Bank 26	Pmod Host Socket, J6	8 Single Ended	3.3 V	

Table 4: General I/O to Pin Header and Connectors Information

5.2 Micro SD Card

TE0802 is equipped with a micro SD card connector (J9).

Schematic	Connected to	Notes
SD_DAT0	MIO 13, FPGA Bank 500	
SD_DAT1	MIO 14, FPGA Bank 500	
SD_DAT2	MIO 15, FPGA Bank 500	
SD_DAT3	MIO 16, FPGA Bank 500	
SD_CLK	MIO 22, FPGA Bank 500	
SD_CMD	MIO 21, FPGA Bank 500	
SD_CD	MIO 24, FPGA Bank 500	

Table 5: Micro SD Card Connector Information

5.3 RJ45 Connector

TE0802 is equipped with a RJ45 connector and an Ethernet PHYs. RJ45 connector J4 is connected to Ethernet PHYs U6.

Pin	Schematic	ETH Pin	Notes
2	PHY_MDI0_P	MDIP[0]	
3	PHY_MDI0_N	MDIN[0]	
4	PHY_MDI1_P	MDIP[1]	
5	PHY_MDI1_N	MDIN[1]	
6	PHY_MDI2_P	MDIP[2]	
7	PHY_MDI2_N	MDIN[2]	
8	PHY_MDI3_P	MDIP[3]	
9	PHY_MDI3_N	MDIN[3]	

Table 6: RJ45 Connector Information

5.4 USBs Sockets

TE0802 is equipped with a Micro USB2.0 B connector J8 and a USB3.0 connector J11.

FTDI FT2232 (U17) can be accessed through Micro USB 2.0 B connector (J8) for JTAG (channel A). Channel B is connected to the FPGA and can be used for UART.

Copyright © 2019 Trenz Electronic GmbH

USB2.0 Pin	Schematic	Connected to	Notes
D-	D_N	FTDI, U17	
D+	D_P	FTDI, U17	
Vbus	USB_VBUS	GND	

Table 7: USB2.0 B Socket Information

USB3.0 Pin	Schematic	Connected to	Notes
D-	USB0_D_N	USB PHY, U22	
D+	USB0_D_P	USB PHY, U22	
StdA_SSRX-	USB_RX2_N	FPGA Bank 505	
StdA_SSRX+	USB_RX2_P	FPGA Bank 505	
StdA_SSTX-	USB_TX2_N	FPGA Bank 505	
StdA_SSTX+	USB_TX2_P	FPGA Bank 505	
VBUS	VBUS	USB PHY, U22	

Table 8: USB3.0 A Socket Information

5.5 SSD M.2 Connector

TE0802 is equipped with a SSD M.2 connector (U5).

Pin	Schematic	Connected to	Notes
PERn0/SATA-B+	SSD_RX3_N	Pin M22, FPGA Bank 505	
PERp0/SATA-B-	SSD_RX3_P	Pin M21, FPGA Bank 505	
PERn0/SATA-A+	SSD_TXC3_N	Pin K22, FPGA Bank 505	
PERp0/SATA-A-	SSD_TXC3_P	Pin M21, FPGA Bank 505	
REFCLKN	SSD_RCLK_N	Pin 9, Clock Generator U8	
REFCLKP	SSD_RCLK_P	Pin 10, Clock Generator U8	
DAS/DSS#	SSD_DAS	MIO35, FPGA Bank 501	

Copyright © 2019 Trenz Electronic GmbH

Pin	Schematic	Connected to	Notes
DEVSLP	SSD_SLEEP	MIO32, FPGA Bank 501	
PERST#	SSD_PERSTn	MIO31, FPGA Bank 501	
CLKREQ#	SSD_CLKRQ	MIO33, FPGA Bank 501	
PEWake#	SSD_WAKE	MIO34, FPGA Bank 501	

Table 9: SSD M.2 Connector Information

5.6 Display Port Connector

TE0802 is equipped with a Display Port connector (J3).

Schematic	Corresponding Signals	Connected to	Notes
DP_TX_L0_P/N	DP0_TX_P/N	Pin A19/A20, FPGA Bank 505	
DP_TX_L1_P/N	DP1_TX_P/N	Pin C19/C20, FPGA Bank 505	
DP_TX_AUX_P/N	DP_AUX_TX/RX	MIO27, MIO30, FPGA Bank 501	

Table 10: Display Port Socket Information

5.7 D-Sub Connector

TE0802 is equipped with a D-Sub connector (J7).

Schematic	Corresponding Signals	Connected to	Notes
VGA_RED	VGA_R0...3	Bank 65	Red Channel
VGA_GREEN	VGA_G0...3	Bank 65	Green Channel
VGA_BLUE	VGA_B0...3	Bank 66	Blue Channel
VGA_RGB_HSYNC	VGA_HS	Bank 26	Horizontal Sync
VGA_RGB_VSYNC	VGA_VS	Bank 26	Vertical Sync

Table 11: D-Sub Connector Information

5.8 Headphone Connector

TE0802 is equipped with a headphone connector (J12).

Copyright © 2019 Trenz Electronic GmbH

Schematic	Connected to	Notes
JACKSNS	Pin F3, FPGA Bank 65	
PWM_R	Pin F4, FPGA Bank 65	
PWM_L	Pin E3, FPGA Bank 65	

Table 12: Headphone Connector Information

5.9 Grove Connector

TE0802 is equipped with a grove connector (J10).

Schematic	Connected to	Notes
Grove_SCL0	MIO18, FPGA Bank 500	
Grove_SDA0	MIO19, FPGA Bank 500	

Table 13: Grove Connector Information

5.10 Pmod Sockets

TE0802 has 2 Pmod 2x6 host sockets which are connected to the FPGA.

Designator	Signals	Connected to	Notes
J5	PMOD_A0...7	Bank 26	
J6	PMOD_B0...7	Bank 26	

Table 14: Pmod SMD Host Socket Information

5.11 Test Points

Test Point	Signals	Notes
TP1	+1.1V_LPDDR4	
TP2	+1.8V_MGTRAVTT	
TP3	+1.8V_PL	
TP4	FT_B_TX	
TP5	DP_TX_PWR	

Copyright © 2019 Trenz Electronic GmbH

Test Point	Signals	Notes
TP6	GND	
TP7	GND	
TP8	PMIC2_SDA	
TP9	PMIC2_TP	
TP10	ONKEY2	
TP11	PMIC2_SCL	
TP12	DP_TX_HPD	
TP13	DP_TX_PWR	
TP14	INT_SCL1	
TP15	INT_SDA1	
TP16	FT_B_RX	
TP17	CLOCKDIST_OE	
TP18	+0.85V_VCCINT	
TP19	+3.3V	
TP20	+1.8V_PS	
TP21	ERR_STATUS	
TP22	+1.2V_PSPLL	
TP23	GND	
TP24	GND	
TP25	PMIC1_SCA	
TP26	PMIC1_SDA	
TP27	ONKEY1	
TP28	PMIC1_TP	

Copyright © 2019 Trenz Electronic GmbH

Test Point	Signals	Notes
TP29	POR_B	
TP30	PSBATT	
TP31	SRST_B	
TP32	DONE	
TP33	INIT_B	
TP34	VBUS	
TP35	USB_VBUS	
TP36	PROG_B	
TP37	ERR_OUT	

Table 15: Test Points Information

Copyright © 2019 Trenz Electronic GmbH

6 On-board Peripherals

Chip/Interface	Designator	Notes
Quad SPI Flash Memory(see page 18)	U16	
LPDDR4 SDRAM(see page 19)	U13	
EEPROM(see page 19)	U2, U18	
USB ULPI PHY(see page 19)	U22	
Ethernet PHY(see page 20)	U6	
FTDI FT2232H(see page 22)	U17	
Clock Generator(see page 23)	U8	
Oscillators(see page 24)	U7, U15, U19, U23, U43	
7-Segment Display(see page 24)	D9	
User LED(see page 25)	LED0...7	
Push Button(see page 25)	BTN1...5	
DIP Switch(see page 26)	S1, S7...8	

Table 16: On-board Peripherals

6.1 Quad SPI Flash Memory

he TE0802 evaluation board has one single QSPI flash connected as x4. Flash size depends on the assembly option, default 32MB

MIO Pin	Schematic	U16 Pin	Notes
MIO0	MIO0	B2	SPI_CLK
MIO1	MIO1	D2	SPI_DQ1
MIO2	MIO2	C4	SPI_DQ2
MIO3	MIO3	D4	SPI_DQ3
MIO4	MIO4	D3	SPI_DQ0

Copyright © 2019 Trenz Electronic GmbH

MIO Pin	Schematic	U16 Pin	Notes
MIO5	MIO5	C2	SPI_CS

Table 17: Quad SPI Interface MIOs and Pins

6.2 LPDDR4 SDRAM

The TE0802 evaluation board has 1 GByte volatile LPDDR4 SDRAM IC (U13) for storing user application code and data. The details depends on the assembly option.

- Part number: IS43LQ32256A-062BLI
- Supply voltage: 1.06 -1.17 V
- Speed: 1600 MHz
- Temperature: -40 to +85 C

6.3 EEPROM

MIO Pin	Schematic	U2 Pin	Notes
MIO8	Int_SCL1	SCL	
MIO9	Int_SDA1	SDA	

Table 18: I2C FPGA EEPROM Interface MIOs and Pins

Type	I2C Address	Designator	Notes
4AA025E48T-I/OT	0x50	U2	EEPROM with MAC

Table 19: I2C Address for FPGA EEPROM

Pin	Schematic	U18 Pin	Notes
CS	EECS	1	FTDI
CLK	EECLK	2	FTDI
DIN/DO	EEDATA	3/4	FTDI

Table 20: I2C FTDI EEPROM Interface Pins

6.4 USB ULPI PHY

The TE802 is equipped with a USB ULPI PHY.

Copyright © 2019 Trenz Electronic GmbH

USB PHY Pin	Signal Schematic Names	Connected to	Note
DATA0	USB0_DATA0	MIO56, FPGA Bank 502	
DATA1	USB0_DATA1	MIO57, FPGA Bank 502	
DATA2	USB0_DATA2	MIO54, FPGA Bank 502	
DATA3	USB0_DATA3	MIO59, FPGA Bank 502	
DATA4	USB0_DATA4	MIO60, FPGA Bank 502	
DATA5	USB0_DATA5	MIO61, FPGA Bank 502	
DATA6	USB0_DATA6	MIO62, FPGA Bank 502	
DATA7	USB0_DATA7	MIO63, FPGA Bank 502	
DIR	USB0_DIR	MIO53, FPGA Bank 502	
NXT	USB0_NXP	MIO55, FPGA Bank 502	
STP	USB0_STP	MIO58, FPGA Bank 502	
RESETB	USB0_RST_N	MIO38, FPGA Bank 501	
CPEN	USB0_VBUS_EN	Pin 1, U21 (Current-limited Power Switch)	
VBUS	VBUS	Pin 8, U21 (Current-limited Power Switch). Pin 1, J11 (USB Connector)	
ID	USB0_ID	Pulled-down to GND	
DP	USB0_D_P	Pin 3, J11 (USB Connector)	
DM	USB0_D_N	Pin 2, J11 (USB Connector)	
REFCLK	USB0_RCLK	Pin 3, U23 (Oscillator)	
CLKOUT	USB0_CLK	MIO52, FPGA Bank 502	

Table 21: USB ULPI PHY Connections and Pins

6.5 Ethernet PHY

The TE0802 is equipped with an Ethernet PHY (U6) which is connected to RJ45 (J4) connector.

Ethernet PHY Pin	Signal Schematic Names	ETH	Note
TXD0	ETH_TXD0	MIO65, FPGA Bank 502	
TXD1	ETH_TXD1	MIO66, FPGA Bank 502	
TXD2	ETH_TXD2	MIO67, FPGA Bank 502	
TXD3	ETH_TXD3	MIO68, FPGA Bank 502	
TX_CTRL	ETH_TXCTL	MIO69, FPGA Bank 502	
TX_CLK	ETH_CLK	MIO64, FPGA Bank 502	
MDIO	ETH_MDIO	MIO77, FPGA Bank 502	Pulled-up to +1.8V_PS.
MDC	ETH_MDC	MIO76, FPGA Bank 502	
MDIP[0]	PHY_MDI0_P	Pin2, J4 (RJ45)	
MDIN[0]	PHY_MDI0_N	Pin3, J4 (RJ45)	
MDIP[1]	PHY_MDI1_P	Pin4, J4 (RJ45)	
MDIN[1]	PHY_MDI1_N	Pin5, J4 (RJ45)	
MDIP[2]	PHY_MDI2_P	Pin6, J4 (RJ45)	
MDIN[2]	PHY_MDI2_N	Pin7, J4 (RJ45)	
MDIP[3]	PHY_MDI3_P	Pin8, J4 (RJ45)	
MDIN[3]	PHY_MDI3_N	Pin9, J4 (RJ45)	
LED[0]	PHY_LED0	LED, J4 (RJ45)	
LED[1]	PHY_LED1	LED, J4 (RJ45)	
CONFIG	-	-	Pulled-up to +1.8V_PS.
XTAL_IN	ETH_XTAL_IN	Pin 3, U7 (Oscillator)	
RESETn	ETH_RST	MIO37, FPGA Bank 501	Pulled-up to +1.8V_PS.

Copyright © 2019 Trenz Electronic GmbH

Ethernet PHY Pin	Signal Schematic Names	ETH	Note
RX_CLK	ETH_RXCK	MIO70, FPGA Bank 502	
RX_CTRL	ETH_RXCTL	MIO75, FPGA Bank 502	
RXD[0]	ETH_RXD0	MIO71, FPGA Bank 502	
RXD[1]	ETH_RXD1	MIO72, FPGA Bank 502	
RXD[2]	ETH_RXD2	MIO73, FPGA Bank 502	
RXD[3]	ETH_RXD3	MIO74, FPGA Bank 502	

Table 22: Ethernet PHY Connections and Pins

6.6 FTDI FT2232H

The FTDI chip U17 converts signals from USB 2.0 to a variety of standard serial and parallel interfaces. Refer to the FTDI data sheet[1] for more information about the capacity of the FT2232H chip.
Channel A of FTDI FT2232H chip is used in MPPSE mode for JTAG. Channel B is used in UART mode.

The configuration of FTDI FT2232H chip is pre-programmed on the EEPROM U18.

FTDI Chip Pin	Signal Schematic Name	Connected to	Notes
ADBUS0	TCK	Pin H13, FPGA Bank 503	JTAG Interface
ADBUS1	TDI	Pin H12, FPGA Bank 503	JTAG Interface
ADBUS2	TDO	Pin J13, FPGA Bank 503	JTAG Interface
ADBUS3	TMS	Pin J12, FPGA Bank 503	JTAG Interface
BDBUS0	FT_B_TX	MIO10, FPGA Bank 500	UART
BDBUS1	FT_B_RX	MIO11, FPGA Bank 500	UART
EECS	EECS	Pin 1, U18 (EEPROM)	
EECLK	EECLK	Pin 2, U18 (EEPROM)	
EEDATA	EEDATA	Pin 3/4, U18 (EEPROM)	
OSCI	-	Pin 3, U19 (Oscillator)	
DM	D_N	Pin 2, J8 (Micro USB 2.0)	

1 http://www.ftdichip.com/Support/Documents/DataSheets/ICs/DS_FT2232H.pdf

FTDI Chip Pin	Signal Schematic Name	Connected to	Notes
DP	D_P	Pin 3, J8 (Micro USB 2.0)	

Table 23: FTDI Chip Interfaces and Pins

6.7 Clock Generator

The TE0802 is equipped with a clock generator (U8).

Clock Generator Pin	Signal Schematic Names	Connected to	Note
REFP	-	Pin 3, U43 (Oscillator)	
REFSEL	REFSEL	-	Pulled-up to +3.3V.
RESETN/SYNC	CLK_GEN_RESET	Pin B5, FPGA Bank 26	Pulled-up to +3.3V.
EEPROMSEL	EEPROMSEL	-	Pulled-up to +3.3V.
SDA/GPIO2	CLK_GEN_SDA	- (Default) MIO9, FPGA Bank 500 (R185/196 required) Pin 2, J14 (Pin Header required)	Pulled-up to +3.3V. (Default) Pulled-up to +3.3V. Pulled-up to +3.3V.
SCL/GPIO3	CLK_GEN_SCL	- (Default) MIO8, FPGA Bank 500 (R185/196 required) Pin 3, J14 (Pin Header required)	Pulled-up to +3.3V. (Default) Pulled-up to +3.3V. Pulled-up to +3.3V.
OE/GPIO4	-	-	Pulled-up to +3.3V.
Y1P	CLK_Y1_P / CLK_DP_P	Pin G19, FPGA Bank 505	27 MHz
Y1N	CLK_Y1_N / CLK_DP_N	Pin G20, FPGA Bank 505	27 MHz
Y2P	CLK_Y2_P / CLK_USB_P	Pin J19, FPGA Bank 505	26 MHz

Copyright © 2019 Trenz Electronic GmbH

Clock Generator Pin	Signal Schematic Names	Connected to	Note
Y2N	CLK_Y2_N / CLK_USB_N	Pin J20, FPGA Bank 505	26 MHz
Y3P	CLK_Y3_P / CLK_PCIe_P	Pin L19, FPGA Bank 505	100 MHz
Y3N	CLK_Y3_N / CLK_PCIe_N	Pin L20, FPGA Bank 505	100 MHz
Y4P	CLK_Y4_P / SSD_RCLK_P	Pin 55, U5 (M.2)	100 MHz
Y4N	CLK_Y4_N / SSD_RCLK_N	Pin 53, U5 (M.2)	100 MHz

Table 24: Clock Generator Connections and Pins

6.8 Clock Sources

Designator	Signal Schematic Names	Connected to	Description	Frequency	Note
U7	ETH_XTAL_IN	Pin 34, U6 (Ethernet PHY)	Clock for Ethernet	25 MHz	
U15	PS_CLK	Pin H14, FPGA Bank 503	Clock for FPGA	33 MHz	
U23	USB_CLK / USB0_RCLK	Pin 26, U22 (USB PHY)	Clock for USB	52 MHz	
U43	-	Pin 5, U8 (Clock Generator)	Clock for Clock Generator	25 MHz	

Table 25: Oscillators

6.9 7-Segment Display

The TE0802 has a 4-Digit-7-Segment LED display.

Pin	Schematic	Connected to	Notes
A/L1	CA / SEG_CA	Pin E4, FPGA Bank 65	

Pin	Schematic	Connected to	Notes
B/L2	CB / SEG_CB	Pin D3, FPGA Bank 65	
C/L3	CC / SEG_CC	Pin N5, FPGA Bank 65	
D	CD / SEG_CD	Pin P5, FPGA Bank 65	
E	CE / SEG_CE	Pin N4, FPGA Bank 65	
F	CF / SEG_CF	Pin C3, FPGA Bank 65	
G	CG / SEG_CG	Pin R5, FPGA Bank 65	
DP	CDP / SEG_CDP	Pin N3, FPGA Bank 65	
A1	SEG_AN1	Pin A9, FPGA Bank 26	
A2	SEG_AN2	Pin B9, FPGA Bank 26	
A3	SEG_AN3	Pin A7, FPGA Bank 26	
A4	SEG_AN4	Pin B6, FPGA Bank 26	
L1-L3	SEG_AN	Pin A8, FPGA Bank 26	

Table 26: 7-Segment LED Pins

6.10 User LED

Schematic	Color	Connected to	Active Level	Note
LED0...7	Red	Bank 65	High	
D12	Green	U9, PMIC	High	POWER_OK

Table 27: On-board LEDs

6.11 Push Button

Designator	Schematic	Connected to	Functionality	Note
BTN_1	USER_BTN_UP	Pin U2, FPGA Bank 65	User Push Button	Pulled-up to +1.8V_PL.

Copyright © 2019 Trenz Electronic GmbH

Designator	Schematic	Connected to	Functionality	Note
BTN_2	USER_BTN_LEFT	Pin R1, FPGA Bank 65	User Push Button	Pulled-up to +1.8V_PL.
BTN_3	USER_BTN_OK	Pin T1, FPGA Bank 65	User Push Button	Pulled-up to +1.8V_PL.
BTN_4	USER_BTN_RIGHT	Pin U1, FPGA Bank 65	User Push Button	Pulled-up to +1.8V_PL.
BTN_5	USER_BTN_DOWN	Pin T2, FPGA Bank 65	User Push Button	Pulled-up to +1.8V_PL.
BTN_6	POR_B	Pin 38, U1 (PMIC), Pin 38, U9 (PMIC), Pin K12, FPGA Bank 503	Reset Button	Pulled-up to +3.3V.

Table 28: On-board Push Buttons

6.12 DIP Switch

Designator	Schematic	Connected to	Functionality	Note
S1A	MODE0	Pin J16, FPGA Bank 503	DIP	Pulled-down to GND.
S1B	MODE1	Pin H15, FPGA Bank 503	DIP	Pulled-down to GND.
S1C	USER_CFG0	Pin A4, FPGA Bank 66	DIP	Pulled-down to GND.
S1D	USER_CFG1	Pin B4, FPGA Bank 66	DIP	Pulled-down to GND.
S7A	USER_SW7	Pin M5, FPGA Bank 65	DIP	Pulled-up to +1.8V_PL.
S7B	USER_SW6	Pin M4, FPGA Bank 65	DIP	Pulled-up to +1.8V_PL.
S7C	USER_SW5	Pin J2, FPGA Bank 65	DIP	Pulled-up to +1.8V_PL.
S7D	USER_SW4	Pin K1, FPGA Bank 65	DIP	Pulled-up to +1.8V_PL.

Copyright © 2019 Trenz Electronic GmbH

Designator	Schematic	Connected to	Functionality	Note
S8A	USER_SW3	Pin L1, FPGA Bank 65	DIP	Pulled-up to +1.8V_PL.
S8B	USER_SW2	Pin M1, FPGA Bank 65	DIP	Pulled-up to +1.8V_PL.
S8C	USER_SW1	Pin P2, FPGA Bank 65	DIP	Pulled-up to +1.8V_PL.
S8D	USER_SW0	Pin P3, FPGA Bank 65	DIP	Pulled-up to +1.8V_PL.

Table 29: DIP Switches

Copyright © 2019 Trenz Electronic GmbH

7 Power and Power-On Sequence

7.1 Power Supply

Power supply with minimum current capability of 3 A for system startup is recommended.

7.2 Power Consumption

Power Input Pin	Typical Current
VIN	TBD*

Table 30: Power Consumption
* TBD - To Be Determined

7.3 Power Distribution Dependencies

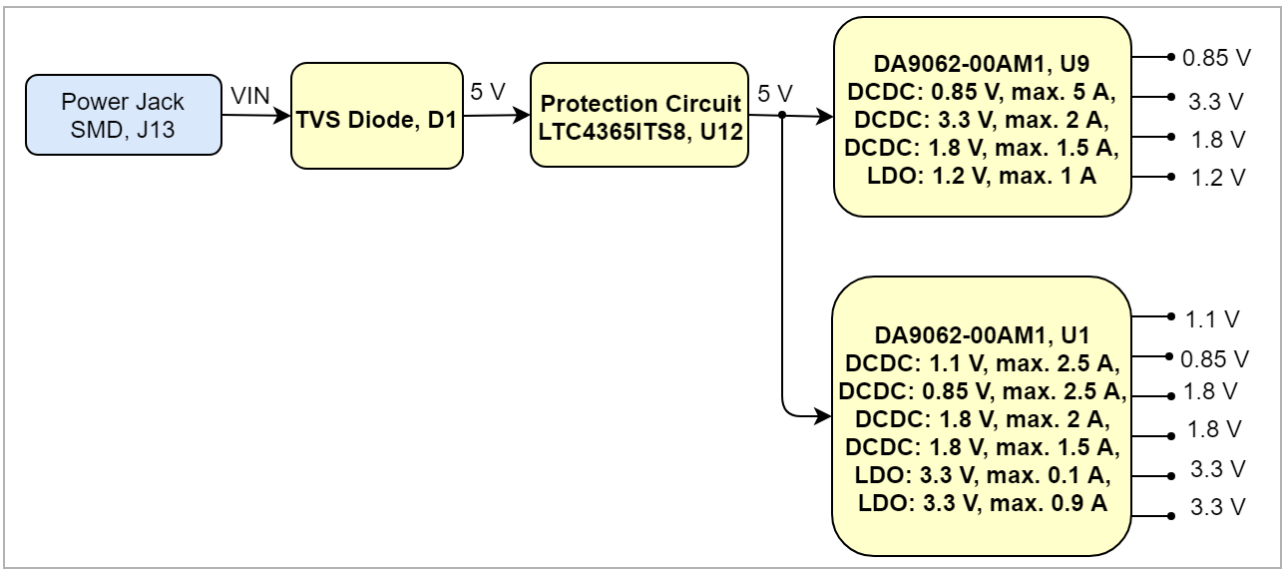

Figure 3: Power Distribution

7.4 Power-On Sequence

PMICs will be reset after pressing Push Button BTN6 (POR_B).

7.5 Power Rails

Power Rail Name	Direction	Notes
VIN	IN	Supply Voltage
+5V	Out	J1...2
+3.3V	Out	J14, J10

Table 31: Module Power Rails

7.6 Bank Voltages

Bank	Schematic Name	Voltage	Notes
Bank 26	+3.3V	3.3 V	
Bank 65	+1.8V_PL	1.8 V	
Bank 66	+1.8V_PL	1.8 V	
Bank 500	+3.3V	3.3 V	
Bank 501	+3.3V	3.3 V	
Bank 502	+1.8V_PS	1.8 V	
Bank 503	+3.3V	3.3 V	
Bank 504	+1.1V_LPDDR4	1.1 V	
Bank 505	+0.85V_MGTRAVCC	0.85 V	

Table 32: SoC Bank Voltages

Copyright © 2019 Trenz Electronic GmbH

8 Technical Specifications

8.1 Absolute Maximum Ratings

Symbols	Description	Min	Max	Unit
VIN	Input Supply Voltage (J13)	-3.5	7	V

Table 33: Absolute Maximum Ratings

8.2 Recommended Operating Conditions

Operating temperature range depends also on customer design and cooling solution. Please contact us for options.

Parameter	Min	Max	Units	Reference Document
VIN	4	5.5	V	Schematic "POWER" (Component: LTC4365ITS8)

Table 34: Recommended Operating Conditions

8.3 Physical Dimensions

Module size: 100 mm × 100 mm. Please download the assembly diagram for exact numbers.

PCB thickness: 1.48 mm

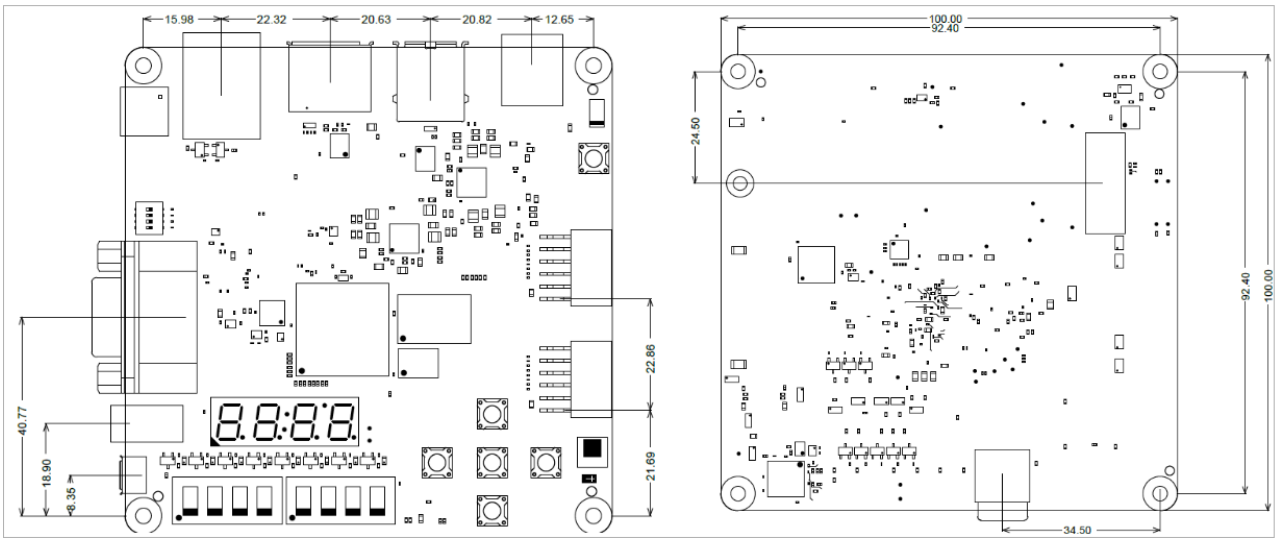

Figure 4: Physical Dimension in mm

9 Currently Offered Variants

Trenz Shop TE0702 Overview Page	
English page[2]	German page[3]

Table 35: Trenz Electronic Shop Overview

2 https://shop.trenz-electronic.de/de/search?sSearch=te0802
3 https://shop.trenz-electronic.de/de/search?sSearch=te0802

Copyright © 2019 Trenz Electronic GmbH

10 Revision History

10.1 Hardware Revision History

Date	Revision	Changes	Documentation Link
2019-04-29	02	• Added suppressor 1SMA5.0AT3G on power input • Changed OV and UV protection range • Changed VGA schematic • USB page: VBUS resistor changed on 1K	REV02[4]
2018-10-17	01	Release	REV01[5]

Table 36: Hardware Revision History

Hardware revision number can be found on the PCB board together with the module model number separated by the dash.

Figure 5: Board Hardware Revision Number

10.2 Document Change History

Date	Revision	Contributor	Description
2019-08-30	v.63(see page 7)	Ivan Grishchenko[6]	• Technical Specifications updated
--	all	Pedram Babakhani[7] , ED[8] , Ivan Grishchenko[9] , John Hartfiel[10]	• --

Table 37: Document Change History

4 https://shop.trenz-electronic.de/Download/?path=Trenz_Electronic/Development_Boards/TE0802/REV02
5 https://shop.trenz-electronic.de/Download/?path=Trenz_Electronic/Development_Boards/TE0802/REV01
6 https://wiki.trenz-electronic.de/display/~i.grishchenko
7 https://wiki.trenz-electronic.de/display/~P.Babakhani
8 https://wiki.trenz-electronic.de/display/~e.dyck
9 https://wiki.trenz-electronic.de/display/~i.grishchenko
10 https://wiki.trenz-electronic.de/display/~j.hartfiel

Copyright © 2019 Trenz Electronic GmbH

11 Disclaimer

11.1 Data Privacy

Please also note our data protection declaration at https://www.trenz-electronic.de/en/Data-protection-Privacy

11.2 Document Warranty

The material contained in this document is provided “as is” and is subject to being changed at any time without notice. Trenz Electronic does not warrant the accuracy and completeness of the materials in this document. Further, to the maximum extent permitted by applicable law, Trenz Electronic disclaims all warranties, either express or implied, with regard to this document and any information contained herein, including but not limited to the implied warranties of merchantability, fitness for a particular purpose or non infringement of intellectual property. Trenz Electronic shall not be liable for errors or for incidental or consequential damages in connection with the furnishing, use, or performance of this document or of any information contained herein.

11.3 Limitation of Liability

In no event will Trenz Electronic, its suppliers, or other third parties mentioned in this document be liable for any damages whatsoever (including, without limitation, those resulting from lost profits, lost data or business interruption) arising out of the use, inability to use, or the results of use of this document, any documents linked to this document, or the materials or information contained at any or all such documents. If your use of the materials or information from this document results in the need for servicing, repair or correction of equipment or data, you assume all costs thereof.

11.4 Copyright Notice

No part of this manual may be reproduced in any form or by any means (including electronic storage and retrieval or translation into a foreign language) without prior agreement and written consent from Trenz Electronic.

11.5 Technology Licenses

The hardware / firmware / software described in this document are furnished under a license and may be used / modified / copied only in accordance with the terms of such license.

11.6 Environmental Protection

To confront directly with the responsibility toward the environment, the global community and eventually also oneself. Such a resolution should be integral part not only of everybody's life. Also enterprises shall be conscious of their social responsibility and contribute to the preservation of our common living space. That is why Trenz Electronic invests in the protection of our Environment.

11.7 REACH, RoHS and WEEE

REACH

Trenz Electronic is a manufacturer and a distributor of electronic products. It is therefore a so called downstream user in the sense of REACH[11]. The products we supply to you are solely non-chemical products (goods). Moreover and under normal and reasonably foreseeable circumstances of application, the goods supplied to you shall not release any substance. For that, Trenz Electronic is obliged to neither register nor to provide safety data sheet. According to present knowledge and to best of our knowledge, no SVHC (Substances of Very High Concern) on the Candidate List[12] are contained in our products. Furthermore, we will immediately and unsolicited inform our customers in compliance with REACH - Article 33 if any substance present in our goods (above a concentration of 0,1 % weight by weight) will be classified as SVHC by the European Chemicals Agency (ECHA)[13].

RoHS

Trenz Electronic GmbH herewith declares that all its products are developed, manufactured and distributed RoHS compliant.

WEEE

Information for users within the European Union in accordance with Directive 2002/96/EC of the European Parliament and of the Council of 27 January 2003 on waste electrical and electronic equipment (WEEE).

Users of electrical and electronic equipment in private households are required not to dispose of waste electrical and electronic equipment as unsorted municipal waste and to collect such waste electrical and electronic equipment separately. By the 13 August 2005, Member States shall have ensured that systems are set up allowing final holders and distributors to return waste electrical and electronic equipment at least free of charge. Member States shall ensure the availability and accessibility of the necessary collection facilities. Separate collection is the precondition to ensure specific treatment and recycling of waste electrical and electronic equipment and is necessary to achieve the chosen level of protection of human health and the environment in the European Union. Consumers have to actively contribute to the success of such collection and the return of waste electrical and electronic equipment. Presence of hazardous substances in electrical and electronic equipment results in potential effects on the environment and human health. The symbol consisting of the crossed-out wheeled bin indicates separate collection for waste electrical and electronic equipment.

Trenz Electronic is registered under WEEE-Reg.-Nr. DE97922676.

2019-06-07

11 http://guidance.echa.europa.eu/
12 https://echa.europa.eu/candidate-list-table
13 http://www.echa.europa.eu/

Copyright © 2019 Trenz Electronic GmbH