M1 should enable / disable IO on E3
– but we haven't made that available on BeanZee

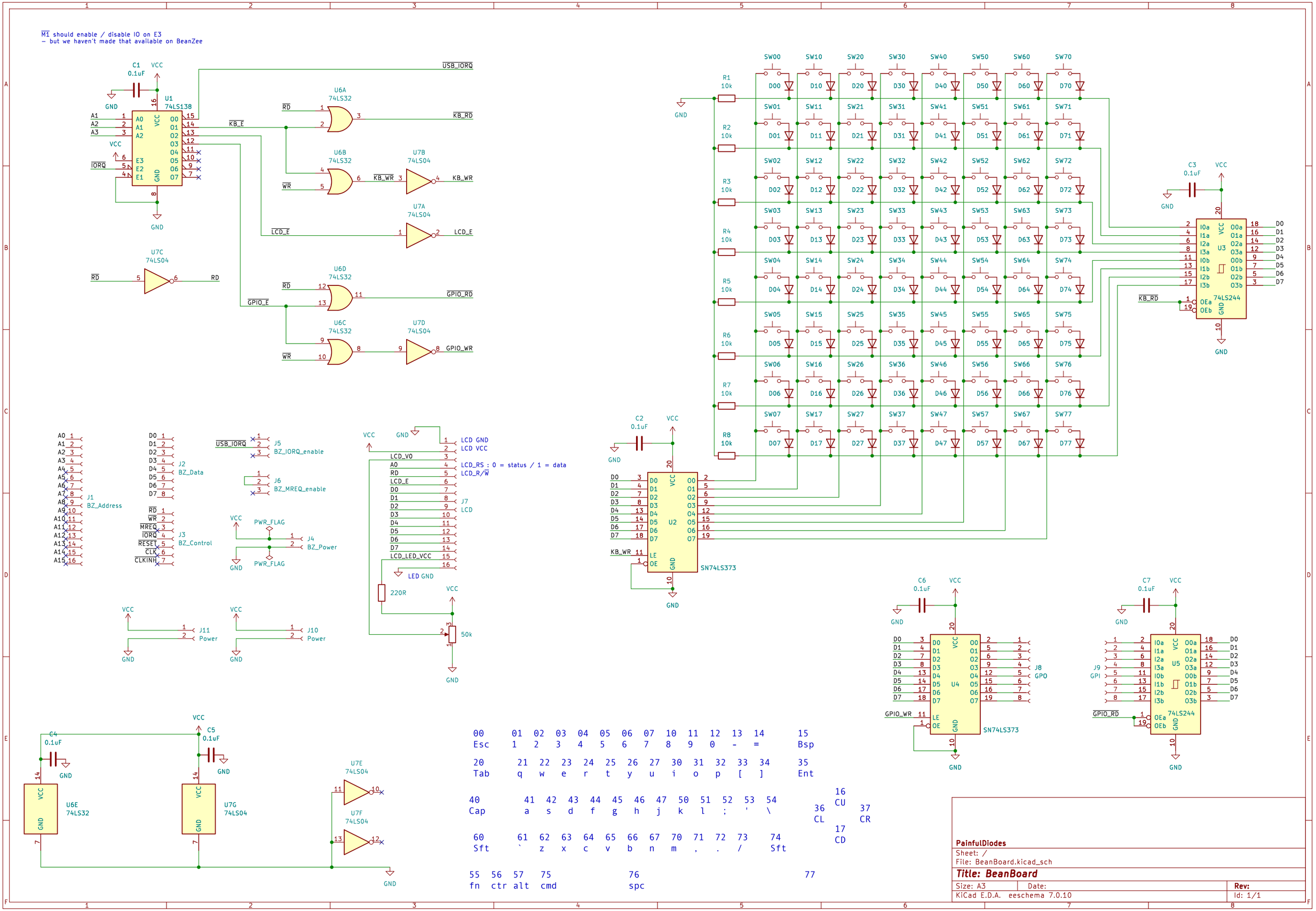

PainfulDiodes

Sheet: /
File: BeanBoard.kicad_sch

Title: BeanBoard

Size: A3	Date:	Rev:
KiCad E.D.A. eeschema 7.0.10		Id: 1/1