M1 should enable / disable IO on E3
– but we haven't made that available on BeanZee

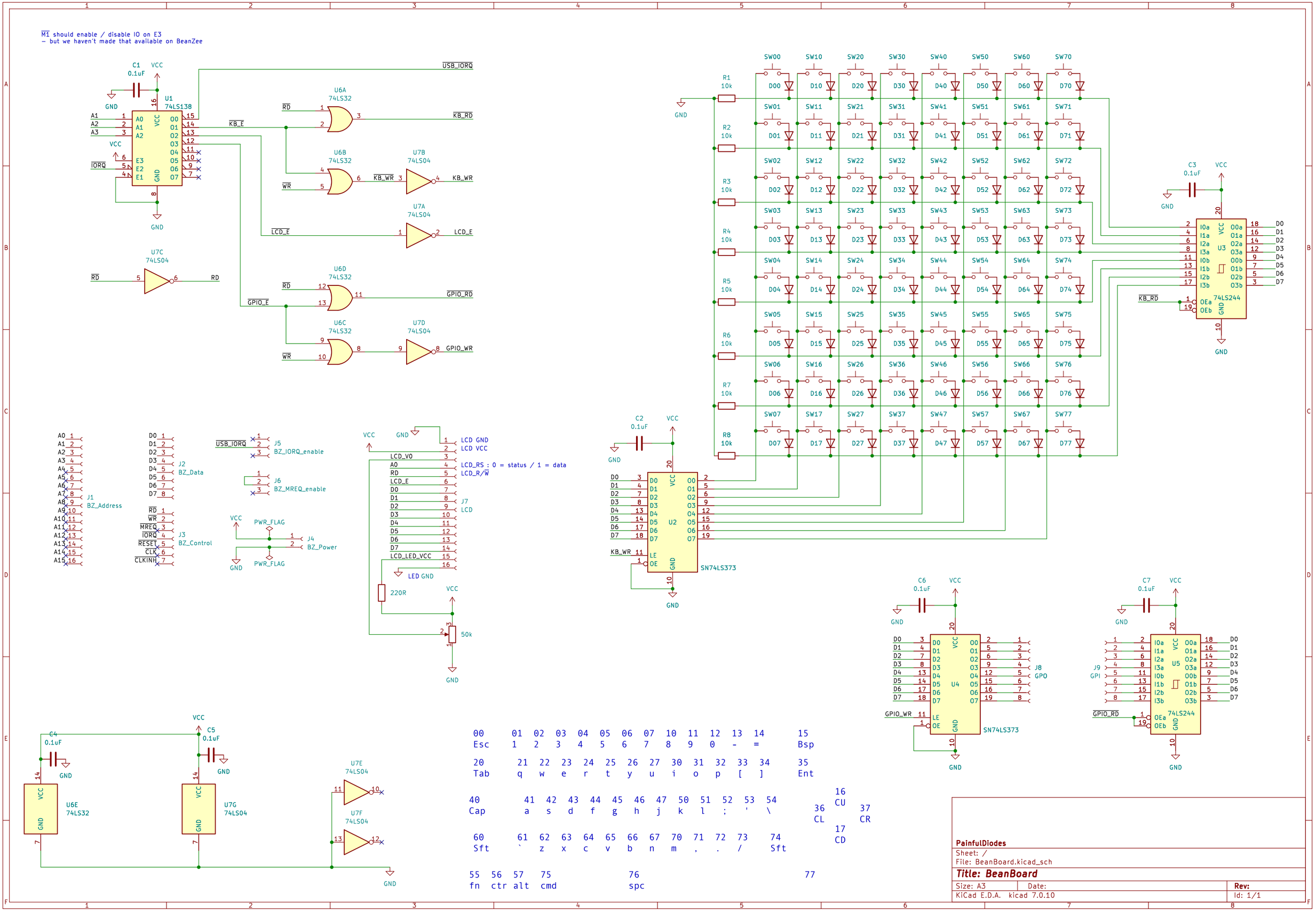

PainfulDiodes	
Sheet: /	
File: BeanBoard.kicad_sch	
Title: BeanBoard	
Size: A3 Date:	Rev:
KiCad E.D.A. kicad 7.0.10	Id: 1/1