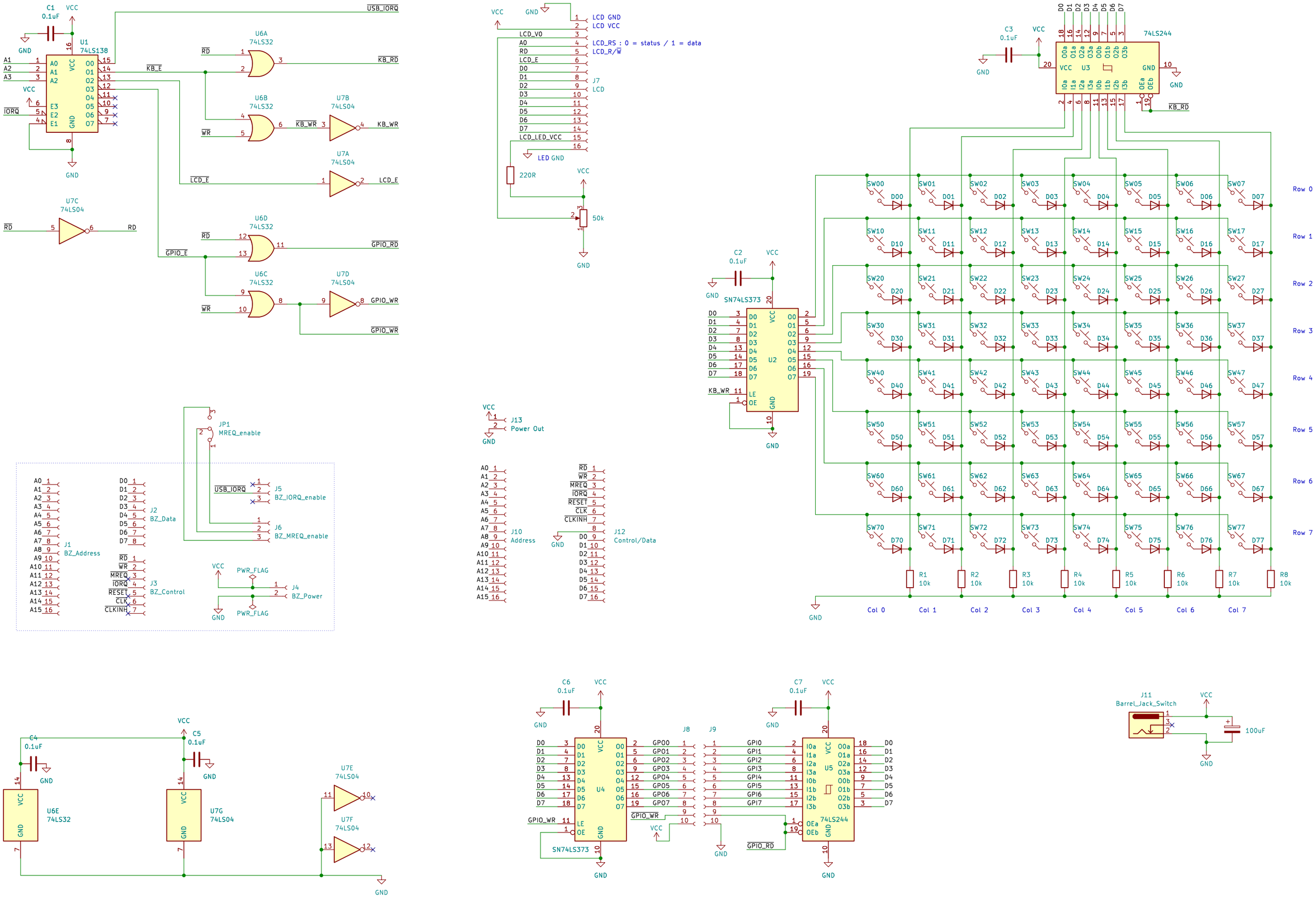
U1 74LS138
U6A 74LS32
U6B 74LS32
U6C 74LS32
U6D 74LS32
U7A 74LS04
U7B 74LS04
U7C 74LS04
U7D 74LS04
U7E 74LS04
U7F 74LS04
U6E 74LS32
U7G 74LS04
C1 0.1uF
C2 0.1uF
C3 0.1uF
C4 0.1uF
C5 0.1uF
C6 0.1uF
C7 0.1uF
VCC
GND
USB_IORQ
KB_RD
KB_WR
LCD_E
GPIO_RD
GPIO_WR
RD
WR
IORQ
GPIO_E
J7 LCD
LCD GND
LCD VCC
LCD_RS : 0 = status / 1 = data
LCD_R/W
LCD_VO
LCD_LED_VCC
LED GND
220R
50k
74LS244
U3
SN74LS373
U2
JP1 MREQ_enable
J5 BZ_IORQ_enable
J6 BZ_MREQ_enable
J1 BZ_Address
J2 BZ_Data
J3 BZ_Control
J4 BZ_Power
PWR_FLAG
J13 Power Out
J10 Address
J12 Control/Data
U4
U5
J8
J9
J11 Barrel_Jack_Switch
100uF
Row 0
Row 1
Row 2
Row 3
Row 4
Row 5
Row 6
Row 7
Col 0
Col 1
Col 2
Col 3
Col 4
Col 5
Col 6
Col 7
R1 10k
R2 10k
R3 10k
R4 10k
R5 10k
R6 10k
R7 10k
R8 10k