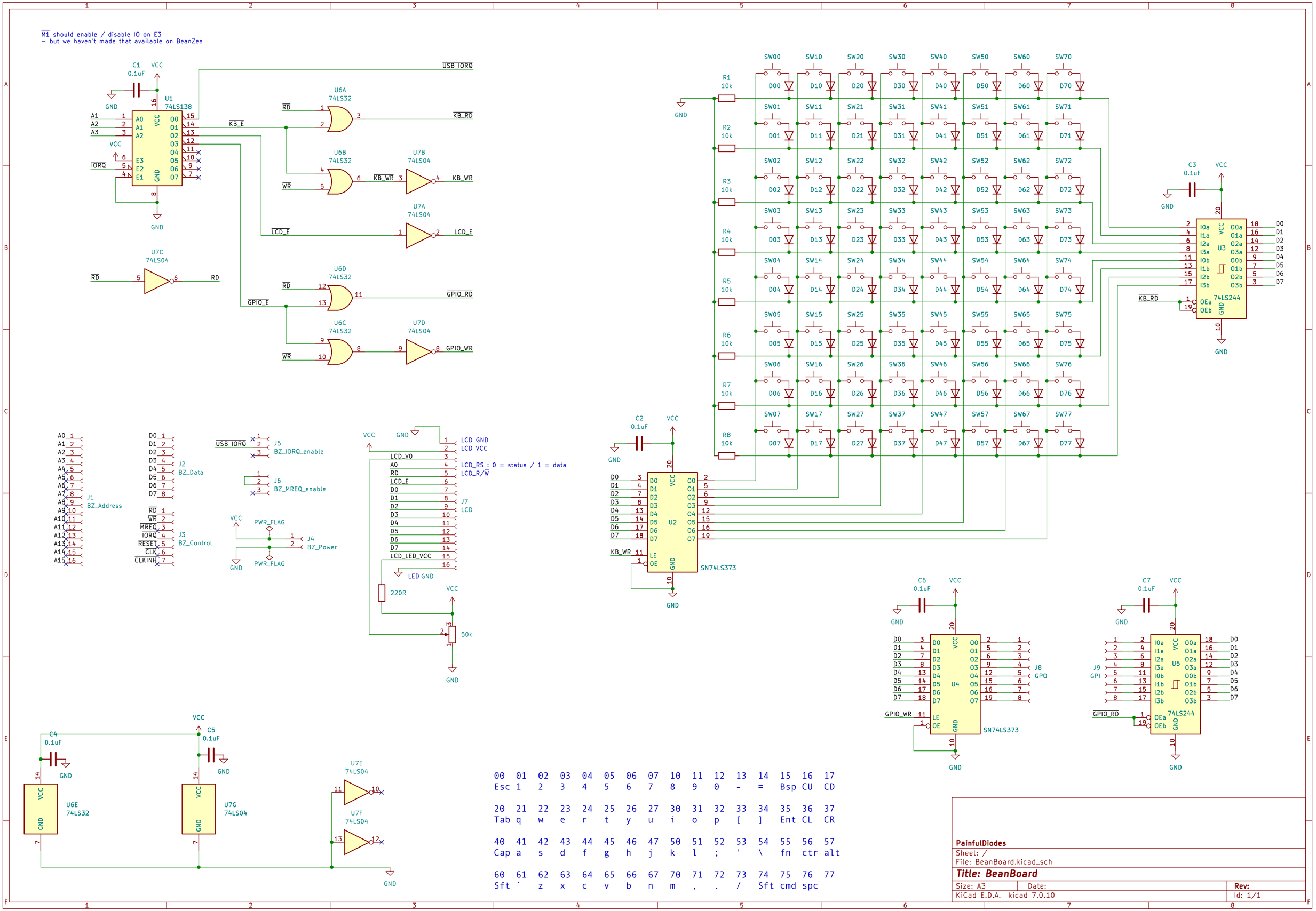M1 should enable / disable IO on E3
– but we haven't made that available on BeanZee