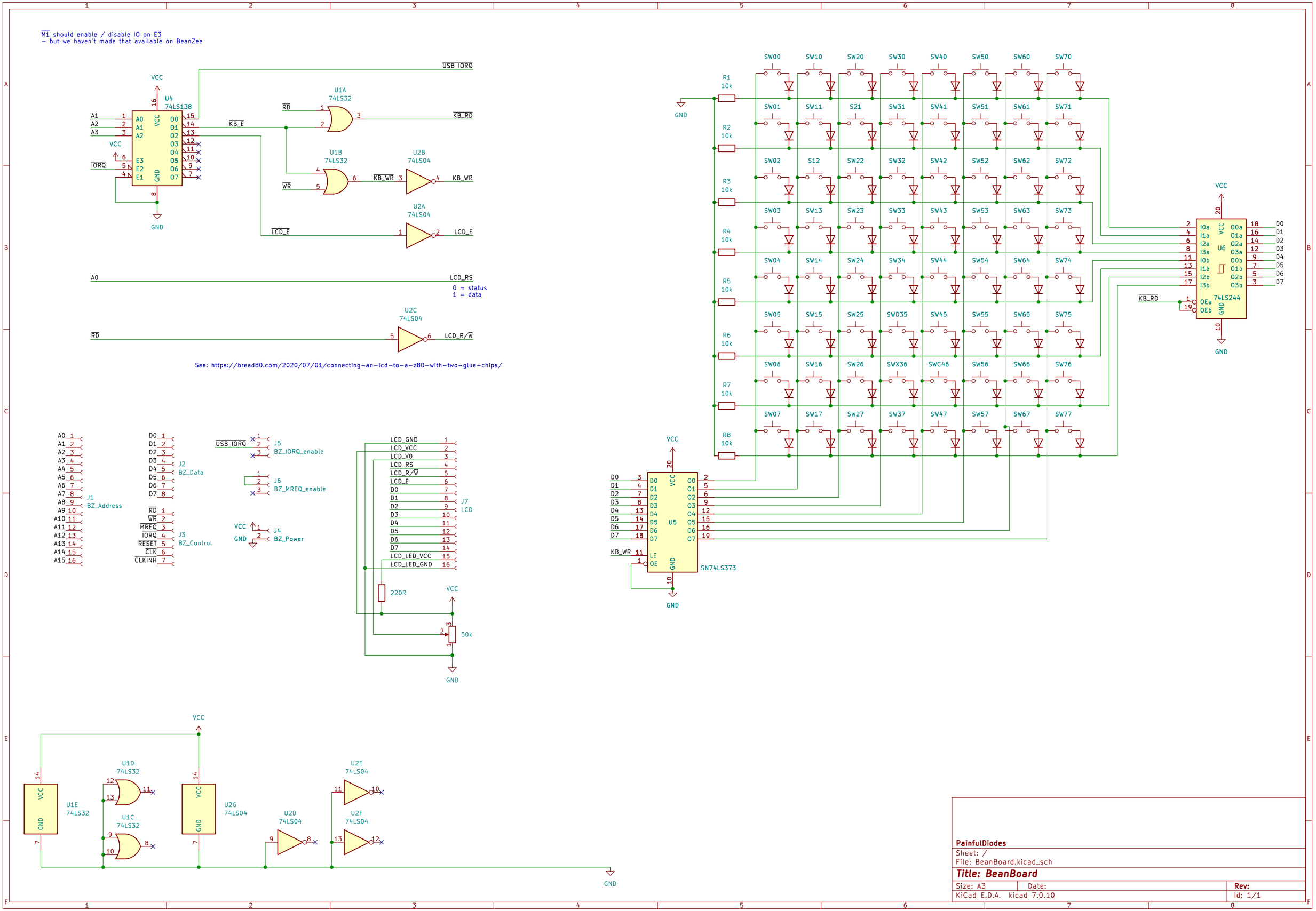
M1 should enable / disable IO on E3
– but we haven't made that available on BeanZee
U4
74LS138
U1A
74LS32
U1B
74LS32
U2B
74LS04
U2A
74LS04
U2C
74LS04
USB_IORQ
KB_RD
KB_WR
KB_E
LCD_E
LCD_RS
0 = status
1 = data
LCD_R/W
See: https://bread80.com/2020/07/01/connecting-an-lcd-to-a-z80-with-two-glue-chips/
J1
BZ_Address
J2
BZ_Data
J3
BZ_Control
J4
BZ_Power
J5
BZ_IORQ_enable
J6
BZ_MREQ_enable
J7
LCD
220R
50k
U5
SN74LS373
U6
74LS244
R1
R2
R3
R4
R5
R6
R7
R8
10k
VCC
GND
PainfulDiodes
Sheet: /
File: BeanBoard.kicad_sch
Title: BeanBoard
Size: A3
Date:
Rev:
KiCad E.D.A. kicad 7.0.10
Id: 1/1