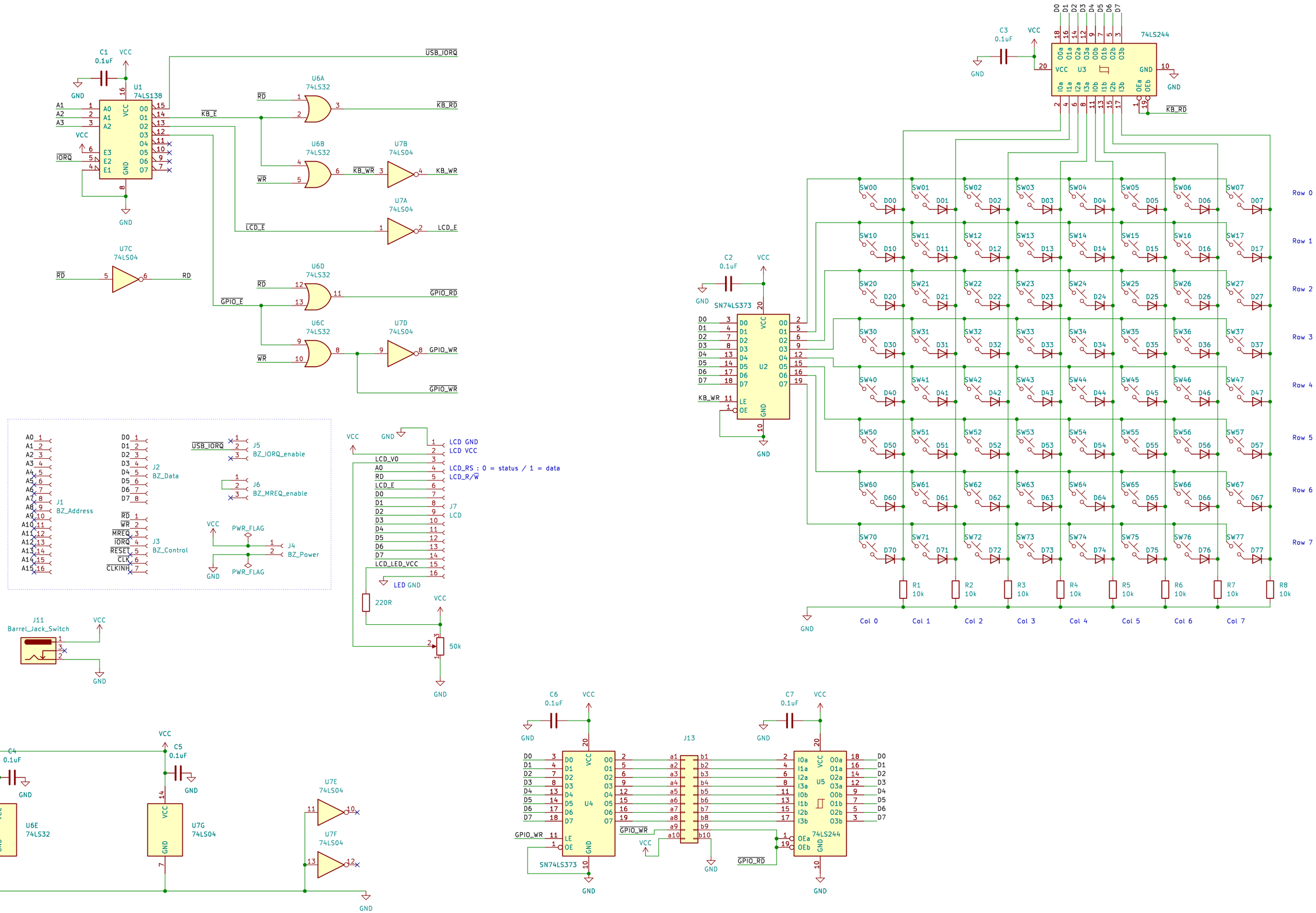
C1 0.1uF
U1 74LS138
A0 A1 A2 A3 E3 E2 E1 O0 O1 O2 O3 O4 O5 O6 O7 VCC GND
IORQ
USB_IORQ
KB_E
LCD_E
GPIO_E
U6A 74LS32
U6B 74LS32
U6C 74LS32
U6D 74LS32
U7A 74LS04
U7B 74LS04
U7C 74LS04
U7D 74LS04
RD
WR
KB_RD
KB_WR
LCD_E
GPIO_RD
GPIO_WR
C3 0.1uF
74LS244
U3
C2 0.1uF
SN74LS373
U2
KB_WR
Row 0
Row 1
Row 2
Row 3
Row 4
Row 5
Row 6
Row 7
Col 0
Col 1
Col 2
Col 3
Col 4
Col 5
Col 6
Col 7
R1 10k
R2 10k
R3 10k
R4 10k
R5 10k
R6 10k
R7 10k
R8 10k
J1 BZ_Address
J2 BZ_Data
J3 BZ_Control
J5 BZ_IORQ_enable
J6 BZ_MREQ_enable
J4 BZ_Power
PWR_FLAG
J7 LCD
LCD GND
LCD VCC
LCD_V0
LCD_RS : 0 = status / 1 = data
LCD_R/W
LCD_LED_VCC
LED GND
220R
50k
J11 Barrel_Jack_Switch
C4 0.1uF
C5 0.1uF
U6E 74LS32
U7G 74LS04
U7E 74LS04
U7F 74LS04
C6 0.1uF
U4
J13
C7 0.1uF
U5
74LS244