BMS
TÍPICO DE INSTALAÇÃO DE INSTRUMENTOS
INSTRUMENT TYPICAL INSTALLATION

REFERÊNCIAS / REFERENCES

1. PRD–AIC–LIS–014 – PRODUTO MEDICAMENTOSO – BMS – ÍNDICE DE INSTRUMENTOS
   PRD–AIC–LIS–014 – DRUG PRODUCT – BMS – INSTRUMENT INDEX
2. PRD–AIC–LIS–015 – SUBSTÂNCIA MEDICAMENTOSA – BMS – ÍNDICE DE INSTRUMENTOS
   PRD–AIC–LIS–015 – DRUG SUBSTANCE – BMS – INSTRUMENT INDEX

NOTAS / NOTES

1. APÓS DETALHAMENTO DAS PLANTAS DE INSTRUMENTAÇÃO, SERÃO INCORPORADOS OS TIPICOS DE SUPORTES.
   AFTER DETAILING THE DETAILING PLANS, THE TIPICOS DETAILS OF SUPPORTS WILL BE DEFINED

REV.0 / REV.0

FECHAMENTO COM AS PLANTAS E FLUXOGRAMAS DE ENGENHARIA E HVAC.
CLOSURE WITH PLANTS AND FLOWCHARTS OF ENGINEERING AND HVAC

REVISION 1 – NOTES AS PER N+1 UPDATE

1–FUTURE INSTRUMENTS INDICATED WITH LINE ABOUT IN THE TEXT

	DATE	DESCRIPTION	DRAWING BY	ENGINEER	REVIEWED
1	06MAI2022	ISSUE FOR CONSTRUCTION. UPDATE AS PER NOTES	MAB	MAF	RSP
0	04OUT2021	ISSUE FOR CONSTRUCTION	JHA	MAF	RSP
A	23APR2021	90% DD ISSUE	JHA	MAF	RSP

TESSLER engenharia | ips

PROJECT	CLIENT	DOC NR	DRAWN BY	REVIEWED	ENGINEER	SCALE	DATE
TAKEDA / BAXALTA	BURITI EPCMV PROJECT	569-DB07-AIC-220-003	JHA	MAF	RSP	AS NOTED	15ABR2021

Takeda | Hemobrás

DRAWING TITLE: DRUG PRODUCT BMS-TYP. INSTALLATION

CLIENT NR.: 07-I-0-8-03

REV.: 1

| 1 | | | | | | | | | 2 | | | | | | | | | 3 | | | | | | | | | 4 | | | | | | | | | 5 | | | | | | | | | 6 | | | | | | | | | 7 | | | | | | | | | 8 | | | | | | | | | 9 | | | | | | | | | 10 | | | | | | | | |
|---|---|---

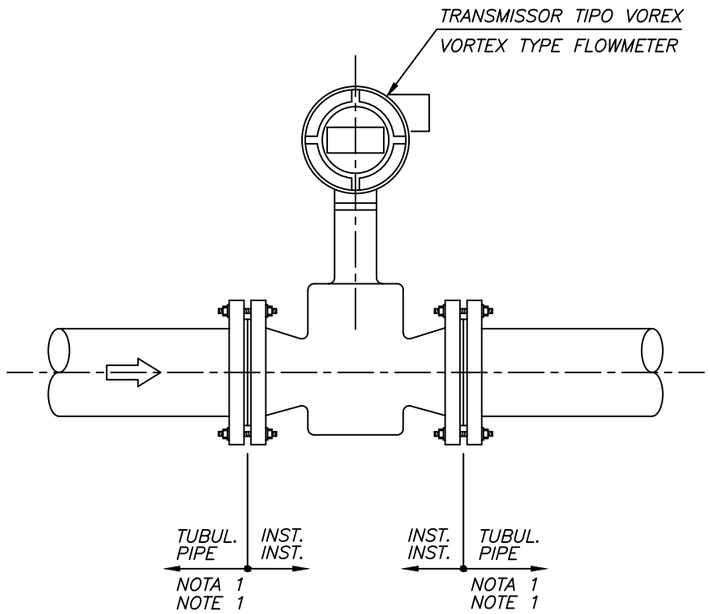

TIPICO DE PROCESSO
PROCESS TYPICAL

NOTAS:
NOTES:

1 – VEDAÇÃO, PARAFUSOS, PORCAS E ARRUELA, FORNECIDAS PELA TUBULAÇÃO, P/ ESPECIF. DESSES MATERIAIS CONSULTE PRD–PIP–TSP–501, ESPECIF. DE MAT. TUBULAÇÃO.

1 – SEAL JOINT, BOLTS, NUTS AND WASHER, SUPPLIED BY PIPE, FOR SPECIFICATION OF THESE MATERIALS SEE PRD–PIP–TSP–501, SPECIFICATION OF PIPING MATERIALS.

APPLICATION: TRANSMISSOR DE VAZÃO TIPO VORTEX / VORTEX TYPE FLOWMETER NON SANITARY

TAG. Nº	TAG. Nº	TAG. Nº	TAG. Nº	TAG. Nº
7A–FIT–790314				
7A–FIT–790315				
7A–FIT–790317				
7B–FIT–790319				

ITEM ITEM	DESCRIÇÃO DESCRIPTION	MATERIAL MATERIAL	DIMENSÃO DIMENSION	UNID. UNIT	QTD QTY	TOTAL TOTAL
10						
9						
8						
7						
6						
5						
4						
3						
2						
1						

TESSLER engenharia | ips | Takeda | Hemobrás

DOC NR: 569-DB07-AIC-220-003

CLIENT NR: 07-I-0-8-03

DRAWING TITLE:
DRUG PRODUCT
BMS - INSTRUMENT TYPICAL INSTALLATION

SHEET: 03 OF 27

REV: 1

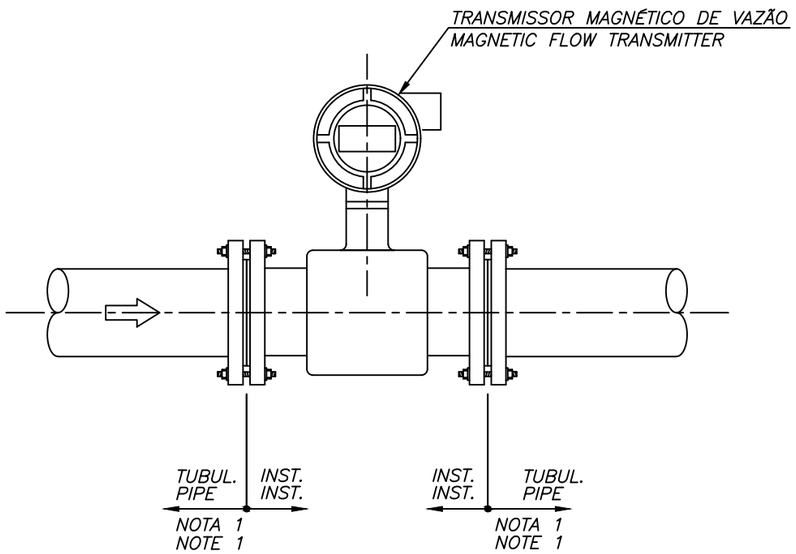

TIPICO DE PROCESSO
PROCESS TYPICAL

NOTAS:
NOTES:

1 – VEDAÇÃO, PARAFUSOS, PORCAS E ARRUELA, FORNECIDAS PELA TUBULAÇÃO, P/ ESPECIF. DESSES MATERIAIS CONSULTE PRD–PIP–TSP–501, ESPECIF. DE MAT. TUBULAÇÃO.

1 – SEAL JOINT, BOLTS, NUTS AND WASHER, SUPPLIED BY PIPE, FOR SPECIFICATION OF THESE MATERIALS SEE PRD–PIP–TSP–501, SPECIFICATION OF PIPING MATERIALS.

APPLICATION: TRANSMISSOR DE VAZÃO MAGNÉTICO / MAGNETIC FLOW TRANSMITTER

TAG. Nº	TAG. Nº	TAG. Nº	TAG. Nº	TAG. Nº
7A–FIT–610001	~~7A–FIT–980077~~			
7A–FIT–940053	7B–FIT–070001			
7A–FIT–940054	7B–FIT–070002			
7A–FIT–940075	7B–FIT–070065			
7A–FIT–940090	7B–FIT–610050			
7A–FIT–940092	7B–FIT–940009			
7A–FIT–960001	7B–FIT–940015			
7A–FIT–960006	7B–FIT–940023			
7A–FIT–960062	7B–FIT–940035			
7A–FIT–960064	7B–FIT–980014			
~~7A–FIT–960066~~	~~7B–FIT–980016~~			
7A–FIT–960075	7B–FIT–980021			
7A–FIT–960076	7B–FIT–980029			
~~7A–FIT–960077~~	~~7B–FIT–980030~~			
7A–FIT–960085				
7A–FIT–960088				
7A–FIT–980056				
~~7A–FIT–980057~~				
7A–FIT–980060				
7A–FIT–980075				

ITEM ITEM	DESCRIÇÃO DESCRIPTION	MATERIAL MATERIAL	DIMENSÃO DIMENSION	UNID. UNIT	QTD QTY	TOTAL TOTAL
10						
9						
8						
7						
6						
5						
4						
3						
2						
1						

TESSLER engenharia | ips | Takeda | Hemobrás Empresa brasileira de hemoderivados e biotecnologia

DOC NR: 569-DB07-AIC-220-003

CLIENT NR: 07-I-0-8-03

DRAWING TITLE:
DRUG PRODUCT
BMS - INSTRUMENT TYPICAL INSTALLATION

SHEET: 04 OF 27

REV: 1

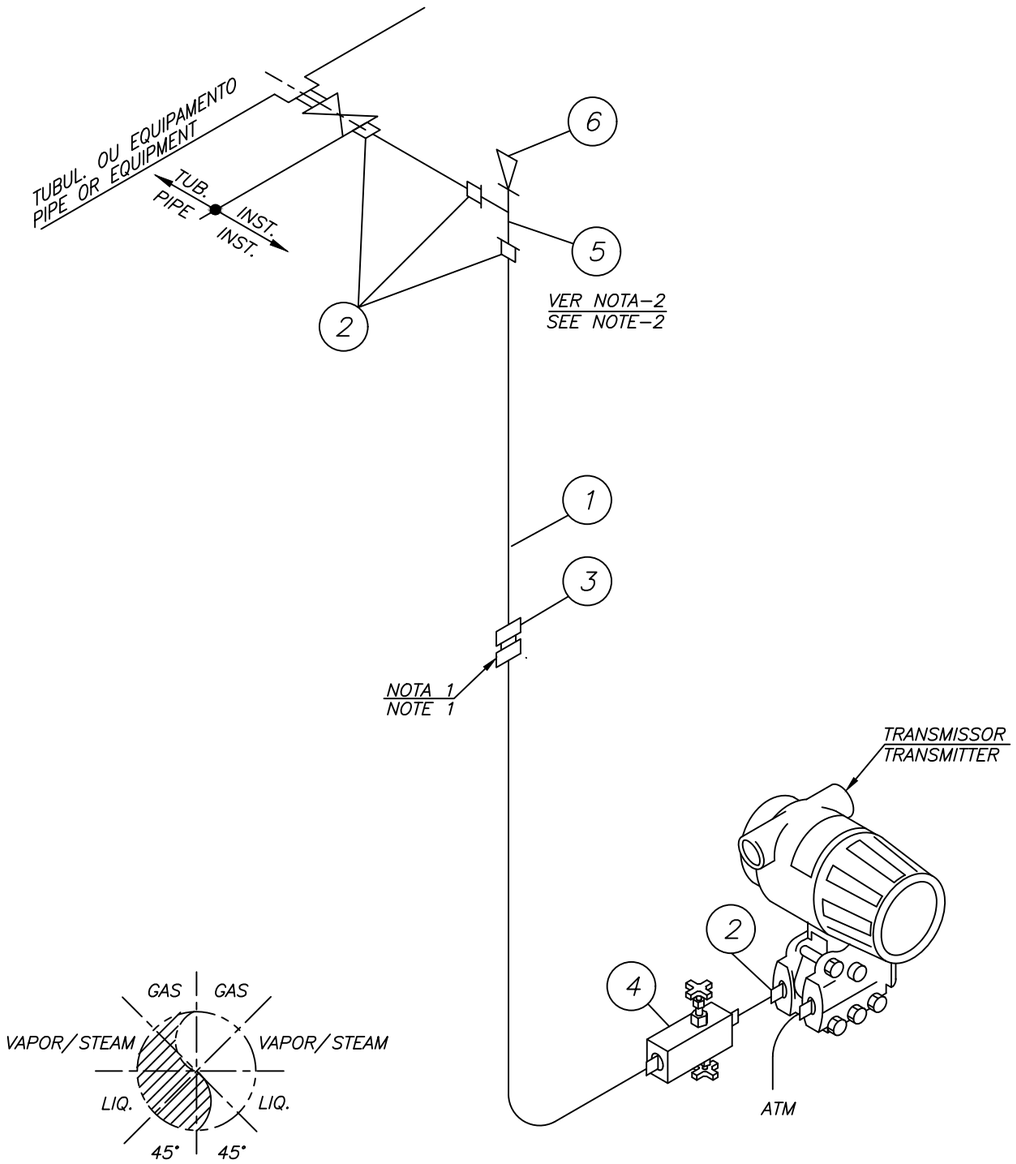

LINHA DE SAÍDA
POSIÇÃO PREFERÊNCIAL
OUTLET LINE
PREFERENCE POSITIONS

TIPICO DE PROCESSO
PROCESS TYPICAL

1 – SE NECESSÁRIO.
1 – IF NECESSARY.

2 – PARA INSTRUMENTOS UTILIZADOS EM LINHAS DE GÁS E LOCADOS ABAIXO DA TOMADA DE IMPULSO.
2 – FOR INSTRUMENTS USED IN GAS LINES AND LEASED BELOW THE IMPULSE OUTLET.

APPLICATION: TRANSMISSOR INDICADOR DE PRESSÃO / PRESSURE INDICATING TRANSMITTER

TAG. Nº	TAG. Nº	TAG. Nº	TAG. Nº	TAG. Nº
7A–PIT–790101	7A–PIT–980052	7B–PIT–980005		
7A–PIT–790201	~~7A–PIT–980053~~	7B–PIT–980013		
7A–PIT–940020	7A–PIT–980056	7B–PIT–980014		
7A–PIT–940053	~~7A–PIT–980057~~	~~7B–PIT–980015~~		
7A–PIT–960059	7A–PIT–980060	~~7B–PIT–980016~~		
7A–PIT–960061	7A–PIT–980075	7B–PIT–980021		
7A–PIT–960062	~~7A–PIT–980077~~	7B–PIT–980029		
7A–PIT–960063	7A–PIT–980080	~~7B–PIT–980030~~		
7A–PIT–960064	~~7A–PIT–980083~~			
~~7A–PIT–960065~~	7B–PIT–070001			
~~7A–PIT–960066~~	7B–PIT–070002			
7A–PIT–960075	7B–PIT–070065			
7A–PIT–960076	7B–PIT–070066			
~~7A–PIT–960077~~	7B–PIT–790104			
7A–PIT–960078	7B–PIT–790212			
7A–PIT–960085	7B–PIT–840021			
7A–PIT–960088	7B–PIT–940009			
7A–PIT–9600120	7B–PIT–940010			
7A–PIT–9600135	7B–PIT–980001			
~~7A–PIT–9600150~~	~~7B–PIT–980002~~			

ESPEC: CS1

ITEM ITEM	DESCRIÇÃO DESCRIPTION	MATERIAL MATERIAL	DIMENSÃO DIMENSION	UNID. UNIT	QTD QTY	TOTAL TOTAL
10						
9						
8						
7						
6	BUJÃO, ASTM A182 GR F316, – 3000#, ROSCA MACHO PLUG, ASTM A182 GR F316, – 3000#, MALE THREAD	AÇO INOX SS	1/2"NPT	pcs PIECE	1	36
5	TE FEMÊA, ASTM A182 GR F316, – 3000#, EXTREMIDADE ROSCADA TE MALE, ASTM A182 GR F316, – 3000#, FEMALE THREAD	AÇO INOX SS	1/2"NPT	pcs PIECE	1	36
4	VÁLVULA MÚLTIPLA, ASTM A182 GR F316, INT. ASTM A182 GR F316 – 3000#, MULTIPLE VALVE, ASTM A182 GR F316, INT. ASTM A182 GR F316 – 3000#,	AÇO INOX SS	1/2"OD	pcs PIECE	1	36
3	~~CONECTOR RETO COMPRESSÃO, ASTM A182 Gr F304, DUPLA ANILHA, EXTREM. OD x OD~~ STRAIGHT CONNECTOR COMPRESSION, ASTM A182 Gr F304, DOUBLE WASHER, EXTREMITY OD x OD	AÇO INOX SS	12mm	pcs PIECE	1	36
2	~~CONECTOR MACHO RETO COMPRESSÃO, ASTM A182 Gr F304, DUPLA ANILHA, EXTREM. OD x NPT~~ STRAIGHT CONNECTOR MALE COMPRESSION, ASTM A182 Gr F304, DOUBLE WASHER, EXTREMITY OD x NPT	AÇO INOX SS	12mm x 1/2"	pcs PIECE	5	180
1	TUBING, AI ASTM A269 Gr TP304, SC, RECOZIDO, ASME B31.3, 0,89 mm ESPES. OD TUBING OD, AI ASTM A269 Gr TP316, SC, RECOOKED, ASME B31.3, 0.89 mm THICKNESS.	AÇO INOX SS	12mm	m m	6	216

TESSLER engenharia | ips | Takeda | Hemobrás Empresa brasileira de hemoderivados e biotecnologia

DOC NR: 569-DB07-AIC-220-003

CLIENT NR: 07-I-0-8-03

DRAWING TITLE:
DRUG PRODUCT
BMS - INSTRUMENT TYPICAL INSTALLATION

SHEET: 05 OF 27

REV: 1

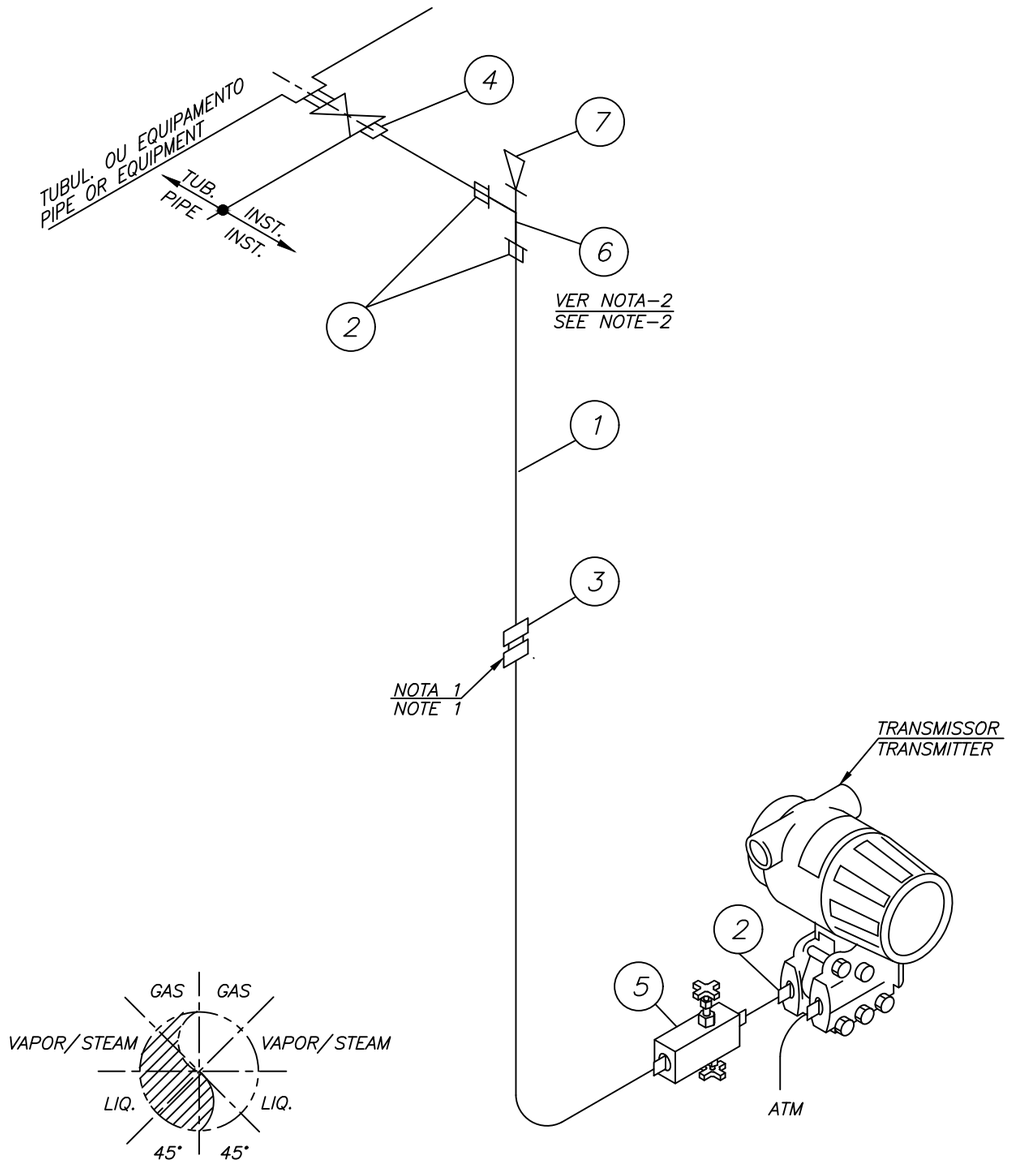

LINHA DE SAÍDA
POSIÇÃO PREFERÊNCIAL
OUTLET LINE
PREFERENCE POSITIONS

TIPICO DE PROCESSO
PROCESS TYPICAL

1 – SE NECESSÁRIO.
IF NECESSARY.

2 – PARA INSTRUMENTOS UTILIZADOS EM LINHAS DE VAPOR E QUE ESTEJAM ABAIXO DA SAÍDA DE IMPULSO.
FOR INSTRUMENTS USED IN STEAM LINES AND THAT ARE BELOW THE IMPULSE OUTLET.

APPLICATION: TRANSMISSOR INDICADOR DE PRESSÃO / PRESSURE INDICATING TRANSMITTER

TAG. Nº	TAG. Nº	TAG. Nº	TAG. Nº	TAG. Nº
7A–PIT–790314				
7A–PIT–790315				
7A–PIT–790317				
7B–PIT–790319				
7B–PIT–790321				
7B–PIT–790327				

ESPEC: CS2

ITEM ITEM	DESCRIÇÃO DESCRIPTION	MATERIAL MATERIAL	DIMENSÃO DIMENSION	UNID. UNIT	QTD QTY	TOTAL TOTAL
10						
9						
8						
7	BUJÃO, ASTM A182 GR F316, – 3000#, ROSCA MACHO PLUG, ASTM A182 GR F316, – 3000#, MALE THREAD	AÇO INOX SS	1/2"NPT	pcs PIECE	1	6
6	TE FEMÊA, ASTM A182 GR F316, – 3000#, EXTREMIDADE ROSCADA TE MALE, ASTM A182 GR F316, – 3000#, FEMALE THREAD	AÇO INOX SS	1/2"NPT	pcs PIECE	1	6
5	VÁLVULA MÚLTIPLA, ASTM A182 GR F316, INT. ASTM A182 GR F316 – 3000#, MULTIPLE VALVE, ASTM A182 GR F316, INT. ASTM A182 GR F316 – 3000#,	AÇO INOX SS	1/2"OD	pcs PIECE	1	6
4	CONECTOR MACHO RETO COMPRESSÃO, ASTM A182 Gr F304, DUPLA ANILHA, EXTREM. OD x PL STRAIGHT CONNECTOR MALE COMPRESSION, ASTM A182 Gr F304, DOUBLE WASHER, EXTREMITY OD x PL	AÇO INOX SS	12mm x 1/2"	pcs PIECE	1	6
3	CONECTOR RETO COMPRESSÃO, ASTM A182 Gr F304, DUPLA ANILHA, EXTREM. OD x OD STRAIGHT CONNECTOR COMPRESSION, ASTM A182 Gr F304, DOUBLE WASHER, EXTREMITY OD x OD	AÇO INOX SS	12mm	pcs PIECE	1	6
2	CONECTOR MACHO RETO COMPRESSÃO, ASTM A182 Gr F304, DUPLA ANILHA, EXTREM. OD x NPT STRAIGHT CONNECTOR MALE COMPRESSION, ASTM A182 Gr F304, DOUBLE WASHER, EXTREMITY OD x NPT	AÇO INOX SS	12mm x 1/2"	pcs PIECE	4	24
1	TUBING, AI ASTM A269 Gr TP304, SC, RECOZIDO, ASME B31.3, 0,89 mm ESPES. OD TUBING OD, AI ASTM A269 Gr TP316, SC, RECOOKED, ASME B31.3, 0.89 mm THICKNESS.	AÇO INOX SS	12mm	m m	6	36

TESSLER engenharia | ips | Takeda | Hemobrás Empresa brasileira de hemoderivados e biotecnologia

DOC NR: 569-DB07-AIC-220-003

CLIENT NR: 07-I-0-8-03

DRAWING TITLE:
DRUG PRODUCT
BMS - INSTRUMENT TYPICAL INSTALLATION

SHEET: 06 OF 27

REV: 1

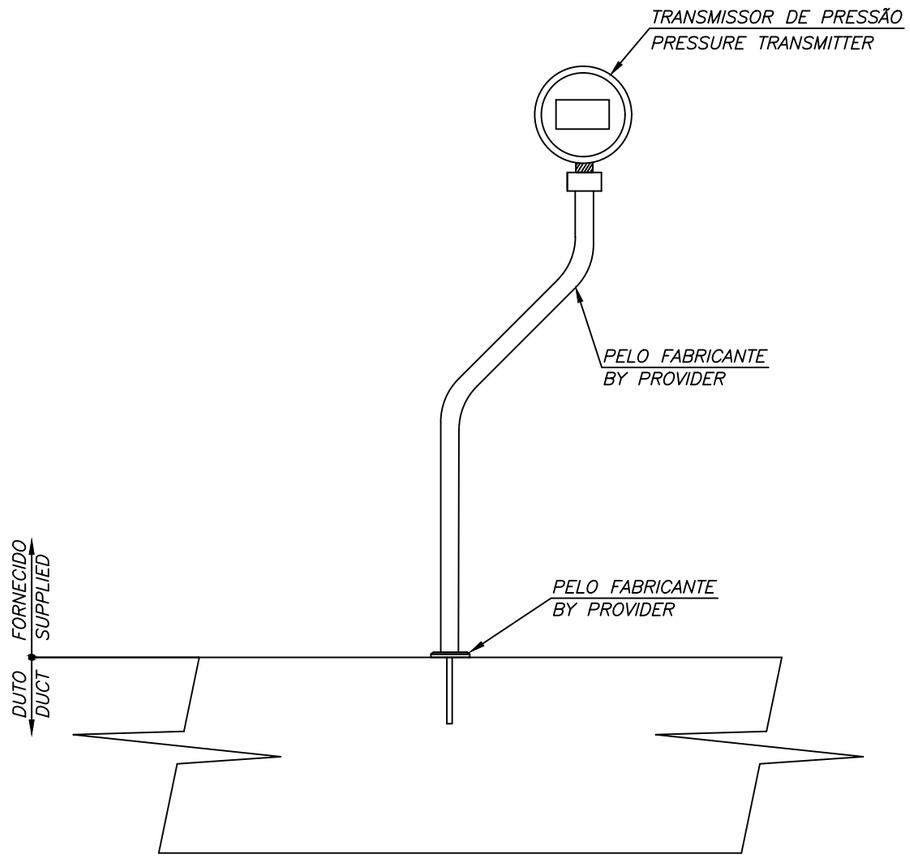

TIPICO DE PROCESSO
PROCESS TYPICAL

APPLICATION: TRANSMISSOR DE PRESSÃO E INDIC. – HVAC /PRESSURE TRANSMITTER AND INDICATION – HVAC

TAG. Nº	TAG. Nº	TAG. Nº	TAG. Nº	TAG. Nº
PT–AHU–7A–1–001	PT–AHU–7B–4–002			
PT–AHU–7A–1–002	PT–AHU–7B–5–001			
PT–AHU–7A–2–001	PT–AHU–7B–5–002			
PT–AHU–7A–2–002	PT–AHU–7B–6–001			
PT–AHU–7A–3–001	PT–AHU–7B–6–002			
PT–AHU–7A–3–002	PT–AHU–7B–7–001			
PT–AHU–7A–4–001	PT–AHU–7B–7–002			
PT–AHU–7A–4–002	PT–AHU–7B–8–001			
PT–AHU–7A–5–001	PT–AHU–7B–8–002			
PT–AHU–7A–5–002	PT–AHU–7B–9–001			
PT–AHU–7A–6–001	PT–AHU–7B–9–002			
PT–AHU–7A–6–002				
PT–DOAS–7A–1–001				
PT–AHU–7B–1–001				
PT–AHU–7B–1–002				
PT–AHU–7B–2–001				
PT–AHU–7B–2–002				
PT–AHU–7B–3–001				
PT–AHU–7B–3–002				
PT–AHU–7B–4–001				

ESPEC: HVAC

ITEM ITEM	DESCRIÇÃO DESCRIPTION	MATERIAL MATERIAL	DIMENSÃO DIMENSION	UNID. UNIT	QTD QTY	TOTAL TOTAL
10						
9						
8						
7						
6						
5						
4						
3						
2						
1						

TESSLER engenharia | ips | Takeda | Hemobrás Empresa brasileira de hemoderivados e biotecnologia

DOC NR: 569-DB07-AIC-220-003

CLIENT NR: 07-I-0-8-03

DRAWING TITLE:
DRUG PRODUCT
BMS - INSTRUMENT TYPICAL INSTALLATION

SHEET: 07 OF 27

REV: 1

NOTAS:
NOTES:

1– ACESSÓRIOS FORNECIDOS PELO FORNECEDOR DO INSTRUMENTO..
ACCESSORIES SUPPLIED BY THE INSTRUMENT PROVIDER.

2– PERFURAÇÃO PARA INSTALAÇÃO DE INSTRUMENTOS É POR PROVEDOR DE EQUIPAMENTOS.
PERFORATION FOR INSTRUMENT INSTALLATION IS BY EQUIPMENT PROVIDER.

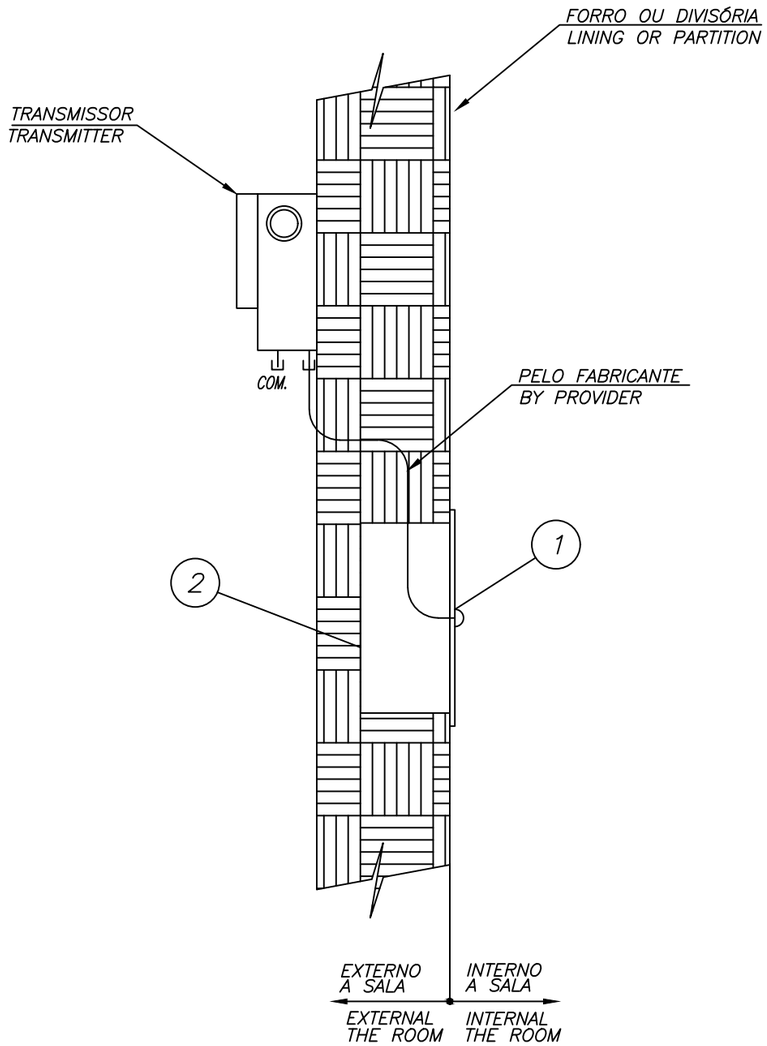

APPLICATION: TRANSMISSOR DIF. P/ CONTROLE NA SALA / DIFFERENTIAL TRANSMITTER FOR CONTROL IN ROOM

TAG. Nº	TAG. Nº	TAG. Nº	TAG. Nº	TAG. Nº
PDT-RAV-A-2001-1	PDT-RAV-A-2037-1	PDT-RAV-B-2015-1	PDT-RAV-B-2036-1	
PDT-RAV-A-2002-1	PDT-RAV-A-2038-1	PDT-RAV-B-2016-1	PDT-RAV-B-2037-1	
PDT-RAV-A-2003-1	PDT-RAV-A-2039-1	PDT-RAV-B-2017-1	PDT-RAV-B-2038-1	
PDT-RAV-A-2005-1	PDT-RAV-A-2040-1	PDT-RAV-B-2018-1	PDT-RAV-B-2039-1	
PDT-RAV-A-2007-1	PDT-RAV-A-2041-1	PDT-RAV-B-2019-1	PDT-RAV-B-2040-1	
PDT-RAV-A-2009-1	PDT-RAV-A-2044-1	PDT-RAV-B-2020-1	PDT-RAV-B-2041-1	
PDT-RAV-A-2017-1	PDT-RAV-A-2046-1	PDT-RAV-B-2021-1	PDT-RAV-B-2042-1	
PDT-RAV-A-2023-1	PDT-RAV-B-1023-4	PDT-RAV-B-2022-1	PDT-RAV-B-2043-1	
PDT-RAV-A-2025-1	PDT-RAV-B-1024-1	PDT-RAV-B-2023-1	PDT-RAV-B-2044-1	
PDT-RAV-A-2026-1	PDT-RAV-B-1025-1	PDT-RAV-B-2024-1	PDT-RAV-B-2045-1	
PDT-RAV-A-2027-1	PDT-RAV-B-2001-1	PDT-RAV-B-2025-1	PDT-RAV-B-2046-1	
PDT-RAV-B-2028-1	PDT-RAV-B-2002-1	PDT-RAV-B-2026-1	PDT-RAV-B-2047-1	
PDT-RAV-A-2029-1	PDT-RAV-B-2003-1	PDT-RAV-B-2027-1	PDT-RAV-B-2048-1	
PDT-RAV-A-2030-1	PDT-RAV-B-2004-1	PDT-RAV-B-2028-1	PDT-RAV-B-2050-1	
PDT-RAV-A-2031-1	PDT-RAV-B-2008-1	PDT-RAV-B-2030-1	PDT-RAV-B-2053-1	
PDT-RAV-A-2032-1	PDT-RAV-B-2010-1	PDT-RAV-B-2031-1	PDT-RAV-B-2054-1	
PDT-RAV-A-2033-1	PDT-RAV-B-2011-1	PDT-RAV-B-2032-1	PDT-RAV-B-2057-1	
PDT-RAV-A-2034-1	PDT-RAV-B-2012-1	PDT-RAV-B-2033-1	PDT-RAV-B-2058-1	
PDT-RAV-A-2035-1	PDT-RAV-B-2013-1	PDT-RAV-B-2034-1	PDT-RAV-B-2059-1	
PDT-RAV-A-2036-1	PDT-RAV-B-2014-1	PDT-RAV-B-2035-1		

ESPEC: HVAC

ITEM ITEM	DESCRIÇÃO DESCRIPTION	MATERIAL MATERIAL	DIMENSÃO DIMENSION	UNID. UNIT	QTD QTY	TOTAL TOTAL
10						
9						
8						
7						
6						
5						
4						
3						
2	CAIXA ELÉTRICA DE EMBUTIR EM PAREDE. WALL-INLAY ELECTRIC BOX.	AÇO INOX SS	2" X 4"	pcs PIECE	1	79
1	COLETOR DE PRESSÃO, COM FILTRO 60micraS, ESPELHO EM AISI PARA CAIXA 2" X 4"-DWYER PRESSURE COLLECTOR, WITH FILTER 60micraS, MIRROR IN AISI FOR BOX 2" X 4" - DWYER	AÇO INOX SS	12mm	pcs PIECE	1	79

TESSLER engenharia | ips | Takeda | Hemobrás Empresa brasileira de hemoderivados e biotecnologia

DOC NR: 569-DB07-AIC-220-003

CLIENT NR: 07-I-0-8-03

DRAWING TITLE:
DRUG PRODUCT
BMS - INSTRUMENT TYPICAL INSTALLATION

SHEET: 08 OF 27

REV: 1

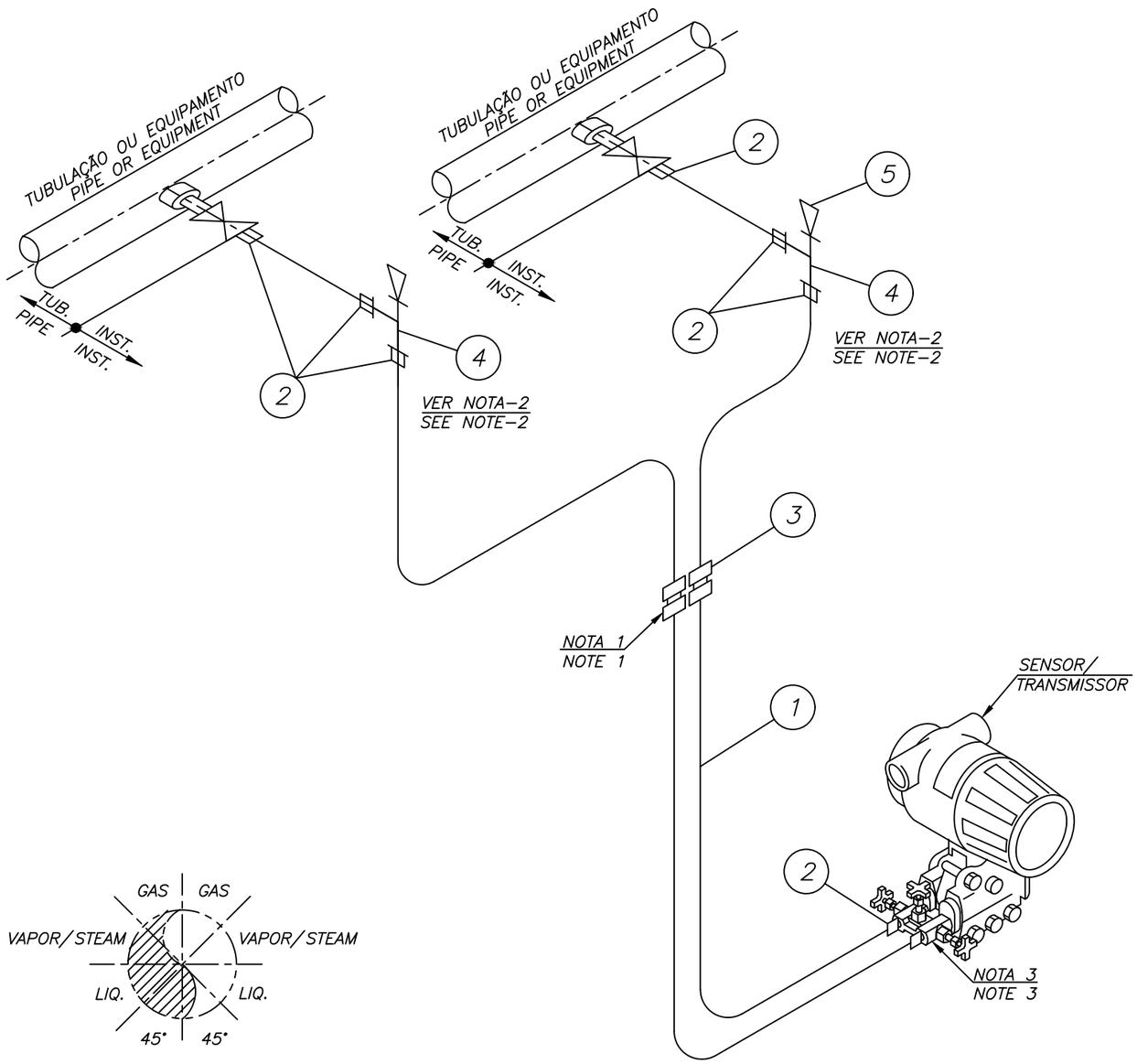

LINHA DE SAÍDA
POSIÇÃO PREFERÊNCIAL
OUTLET LINE
PREFERENCE POSITIONS

TIPICO DE PROCESSO
PROCESS TYPICAL

1 – SE NECESSÁRIO.
IF NECESSARY.

2 – PARA INSTRUMENTOS UTILIZADOS EM LINHAS DE VAPOR E QUE ESTEJAM ABAIXO DA SAÍDA DE IMPULSO, USAR TÊ DE VEDAÇÃO.
FOR INSTRUMENTS USED IN STEAM LINES AND THAT ARE BELOW THE IMPULSE OUTLET, USE TEE OF FENCE.

3 – MANIFOLD FORNECIDO COM INSTRUMENTO.
3 – MANIFOLD SUPPLIED WITH INSTRUMENT.

APPLICATION: TRANSMISSOR DE PRESSÃO DIFERÊNCIAL / DIFFERENTIAL PRESSURE TRANSMITTER

TAG. Nº	TAG. Nº	TAG. Nº	TAG. Nº	TAG. Nº
7A–PDIT–9600234				
7A–PDIT–970005				
7A–PDIT–980163				
7B–PDIT–070001				
7B–PDIT–960008				
7B–PDIT–970001				
7B–PDIT–980010				
7A–PDIT–980163				

ESPEC: CS1

ITEM ITEM	DESCRIÇÃO DESCRIPTION	MATERIAL MATERIAL	DIMENSÃO DIMENSION	UNID. UNIT	QTD QTY	TOTAL TOTAL
10						
9						
8						
7						
6						
5	BUJÃO, ASTM A182 GR F316, – 3000#, ROSCA MACHO PLUG, ASTM A182 GR F316, – 3000#, MALE THREAD	AÇO INOX SS	1/2"NPT	pcs PIECE	1	8
4	TE FEMÊA, ASTM A182 GR F316, – 3000#, EXTREMIDADE ROSCADA TE MALE, ASTM A182 GR F316, – 3000#, FEMALE THREAD	AÇO INOX SS	1/2"NPT	pcs PIECE	1	8
3	CONECTOR RETO COMPRESSÃO, ASTM A182 Gr F304, DUPLA ANILHA, EXTREM. OD x OD STRAIGHT CONNECTOR COMPRESSION, ASTM A182 Gr F304, DOUBLE WASHER, EXTREMITY OD x OD	AÇO INOX SS	12mm	pcs PIECE	2	16
2	CONECTOR MACHO RETO COMPRESSÃO, ASTM A182 Gr F304, DUPLA ANILHA, EXTREM. OD x NPT STRAIGHT CONNECTOR MALE COMPRESSION, ASTM A182 Gr F304, DOUBLE WASHER, EXTREMITY OD x NPT	AÇO INOX SS	12mm x 1/2"	pcs PIECE	8	64
1	TUBING, Al ASTM A269 Gr TP304, SC, RECOZIDO, ASME B31.3, 0,89 mm ESPES. OD TUBING OD, Al ASTM A269 Gr TP316, SC, RECOOKED, ASME B31.3, 0.89 mm THICKNESS.	AÇO INOX SS	12mm	m m	12	96

TESSLER engenharia | ips | Takeda | Hemobrás

DOC NR: 569-DB07-AIC-220-003

CLIENT NR: 07-I-0-8-03

DRAWING TITLE:
DRUG PRODUCT
BMS - INSTRUMENT TYPICAL INSTALLATION

SHEET: 09 OF 27

REV: 1

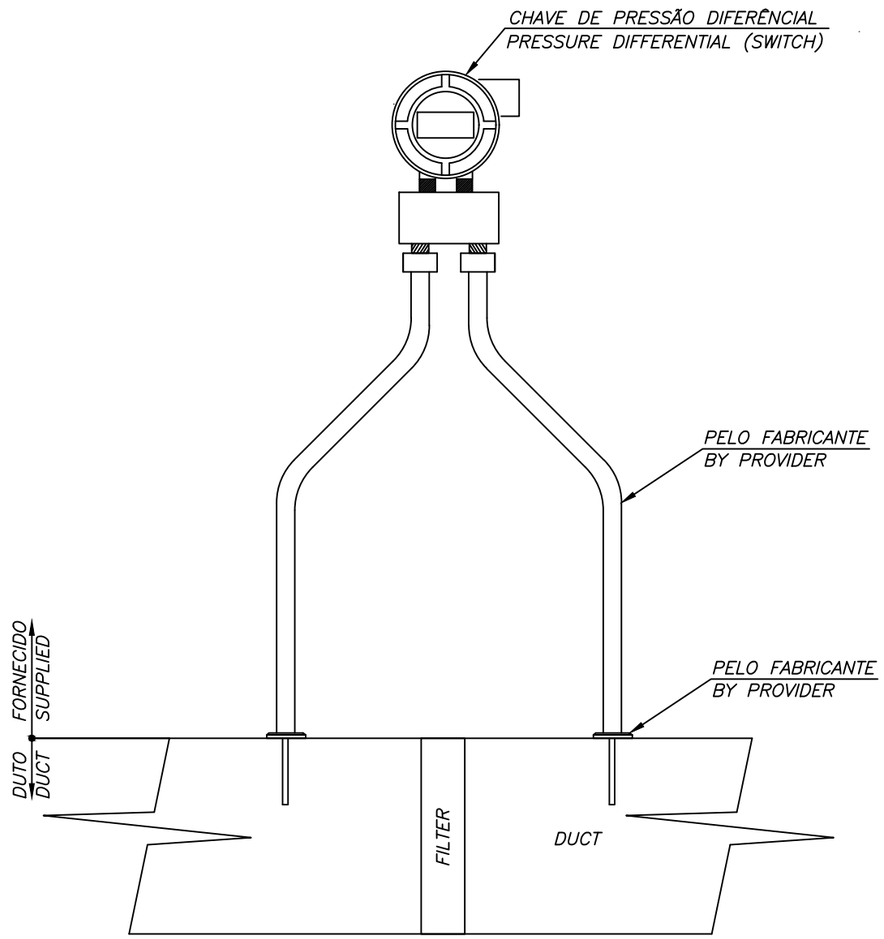

TIPICO DE PROCESSO
PROCESS TYPICAL

NOTAS:
NOTES:

1– ACESSÓRIOS FORNECIDOS PELO FORNECEDOR DO INSTRUMENTO.
ACCESSORIES SUPPLIED BY THE INSTRUMENT PROVIDER.

2– PERFURAÇÃO PARA INSTALAÇÃO DE INSTRUMENTOS É PELO FABRICANTE DO EQUIPAMENTOS.
PERFORATION FOR INSTRUMENT INSTALLATION IS BY EQUIPMENT PROVIDER.

APPLICATION: PRESSURE DIFFERENTIAL SWITCH FOR HVAC PRESSURE DIFFERENTIAL SWITCH FOR HVAC

TAG. Nº	TAG. Nº	TAG. Nº	TAG. Nº	TAG. Nº
PDS–AHU–7A–1–001				
PDS–AHU–7A–2–001				
PDS–AHU–7A–3–001				
PDS–AHU–7A–4–001				
PDS–AHU–7A–5–001				
PDS–AHU–7A–6–001				
PDS–AHU–7B–1–001				
PDS–AHU–7B–2–001				
PDS–AHU–7B–3–001				
PDS–AHU–7B–4–001				
PDS–AHU–7B–5–001				
PDS–AHU–7B–6–001				
PDS–AHU–7B–7–001				
PDS–AHU–7B–8–001				
PDS–AHU–7B–9–001				

ESPEC: HVAC

ITEM ITEM	DESCRIÇÃO DESCRIPTION	MATERIAL MATERIAL	DIMENSÃO DIMENSION	UNID. UNIT	QTD QTY	TOTAL TOTAL
10						
9						
8						
7						
6						
5						
4						
3						
2						
1						

TESSLER engenharia | ips | Takeda | Hemobrás Empresa brasileira de hemoderivados e biotecnologia

DOC NR: 569-DB07-AIC-220-003

CLIENT NR: 07-I-0-8-03

DRAWING TITLE:
DRUG PRODUCT
BMS - INSTRUMENT TYPICAL INSTALLATION

SHEET: 10 OF 27

REV: 1

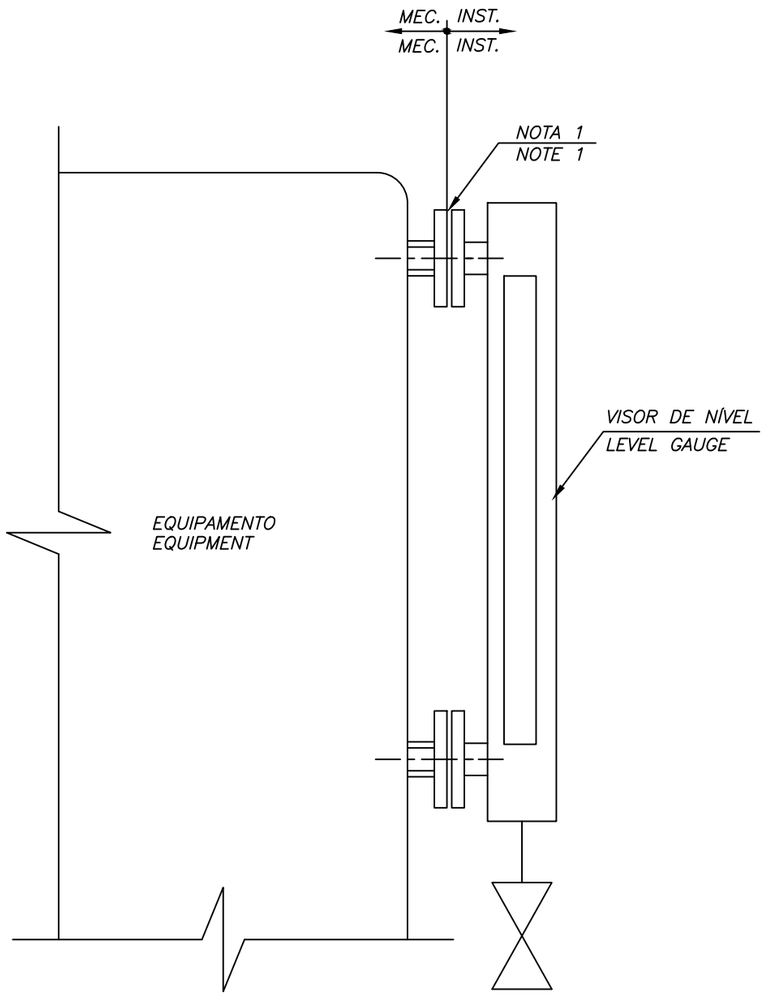

TIPICO DE PROCESSO
PROCESS TYPICAL

NOTAS:
NOTES:

1 – JUNTA DE VEDAÇÃO, PARAFUSOS, PORCAS E ARRUELA, FORNECIDOS PELA TUBULAÇÃO, PARA ESPECIFICAÇÃO DESSES MATERIAIS CONSULTE PRD–PIP–TSP–501, ESPECIFICAÇÃO DE MATERIAIS DE TUBULAÇÃO.

SEAL JOINT, BOLTS, NUTS AND WASHER, SUPPLIED BY PIPE, FOR SPECIFICATION OF THESE MATERIALS SEE PRD–PIP–TSP–501, SPECIFICATION OF PIPING MATERIALS.

APPLICATION: VISOR DE NÍVEL / LEVEL GAUGE

TAG. Nº	TAG. Nº	TAG. Nº	TAG. Nº	TAG. Nº
7B–LG–9800250				

ESPEC: CS1

ITEM ITEM	DESCRIÇÃO DESCRIPTION	MATERIAL MATERIAL	DIMENSÃO DIMENSION	UNID. UNIT	QTD QTY	TOTAL TOTAL
10						
9						
8						
7						
6						
5						
4						
3						
2						
1						

TESSLER engenharia | ips | Takeda | Hemobrás Empresa brasileira de hemoderivados e biotecnologia

DOC NR: 569-DB07-AIC-220-003

CLIENT NR: 07-I-0-8-03

DRAWING TITLE:
DRUG PRODUCT
BMS - INSTRUMENT TYPICAL INSTALLATION

SHEET: 11 OF 27

REV: 1

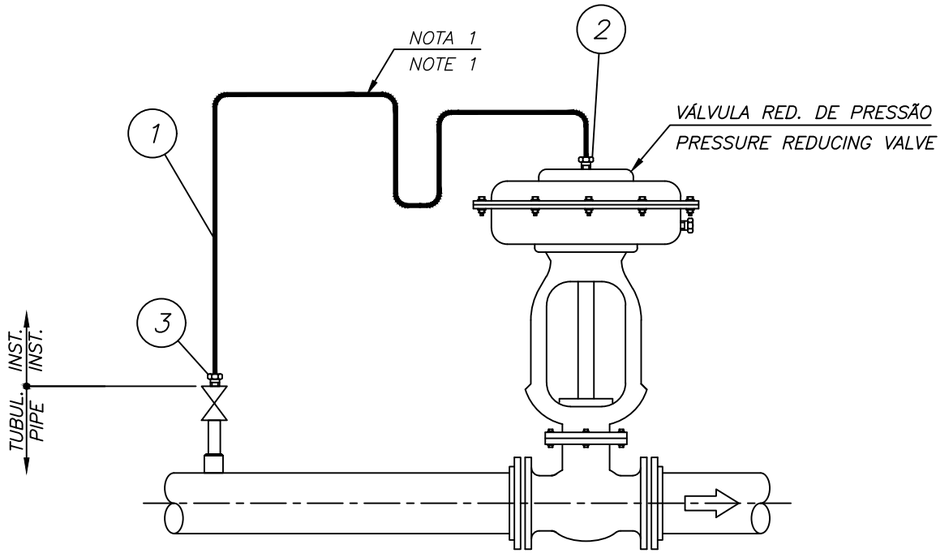

CONTROL. DE PRESSÃO A MONTANTE
AMOUNT PRESSURE CONTROL

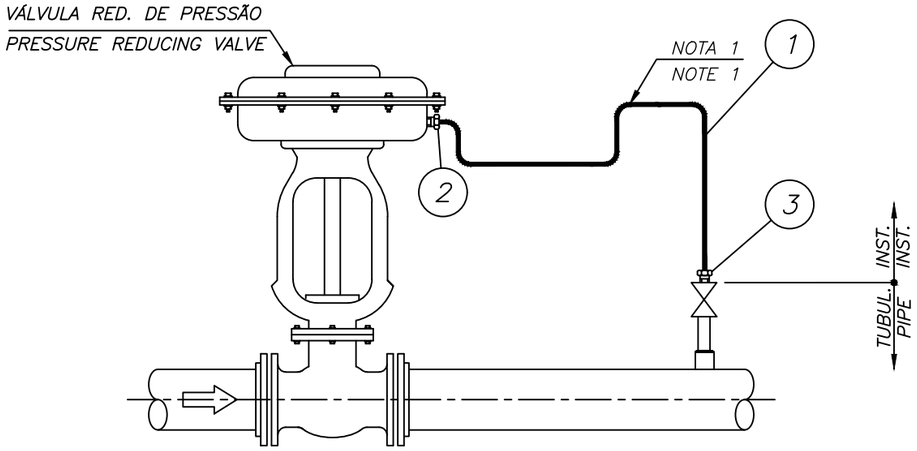

CONTROL. DE PRESSÃO A JUSANTE
DOWNSTREAM PRESSURE CONTROL

TIPICO DE PROCESSO
PROCESS TYPICAL

NOTAS:
NOTES:

1 – USE SIFÃO APENAS EM LINHAS DE VAPOR E GASES CONDENSADOS.
USE SIPHON ONLY ON STEAM LINES AND CONDENSABLE GASES.

APPLICATION: VÁLVULA REDUTORA DE PRESSÃO NÃO SANITÁRIA / PRESSURE REDUCING VALVE NON SANITARY

TAG. Nº	TAG. Nº	TAG. Nº	TAG. Nº	TAG. Nº
7A–PCV–610001				
7A–PCV–790101				
7A–PCV–790201				
7A–PCV–790314				
7B–PCV–610050				
7B–PCV–790104				

ESPEC: PP1 / CS02

ITEM ITEM	DESCRIÇÃO DESCRIPTION	MATERIAL MATERIAL	DIMENSÃO DIMENSION	UNID. UNIT	QTD QTY	TOTAL TOTAL
10						
9						
8						
7						
6						
5						
4						
3	CONECTOR MACHO RETO COMPRESSÃO, ASTM A182 Gr F304, DUPLA ANILHA, EXTREM. OD x PL STRAIGHT CONNECTOR MALE COMPRESSION, ASTM A182 Gr F304, DOUBLE WASHER, EXTREMITY OD x PL	AÇO INOX SS	12mm x 1/2"	pcs PIECE	1	6
2	CONECTOR MACHO RETO COMPRESSÃO, ASTM A182 Gr F304, DUPLA ANILHA, EXTREM. OD x NPT STRAIGHT CONNECTOR MALE COMPRESSION, ASTM A182 Gr F304, DOUBLE WASHER, EXTREMITY OD x NPT	AÇO INOX SS	12mm x 1/2"	pcs PIECE	4	24
1	TUBING, AI ASTM A269 Gr TP304, SC, RECOZIDO, ASME B31.3, 0,89 mm ESPES. OD TUBING OD, AI ASTM A269 Gr TP316, SC, RECOOKED, ASME B31.3, 0.89 mm THICKNESS.	AÇO INOX SS	12mm	m m	6	36

TESSLER engenharia | ips | Takeda | Hemobrás

DOC NR: 569-DB07-AIC-220-003

CLIENT NR: 07-I-0-8-03

DRAWING TITLE:
DRUG PRODUCT
BMS - INSTRUMENT TYPICAL INSTALLATION

SHEET: 12 OF 27

REV: 1

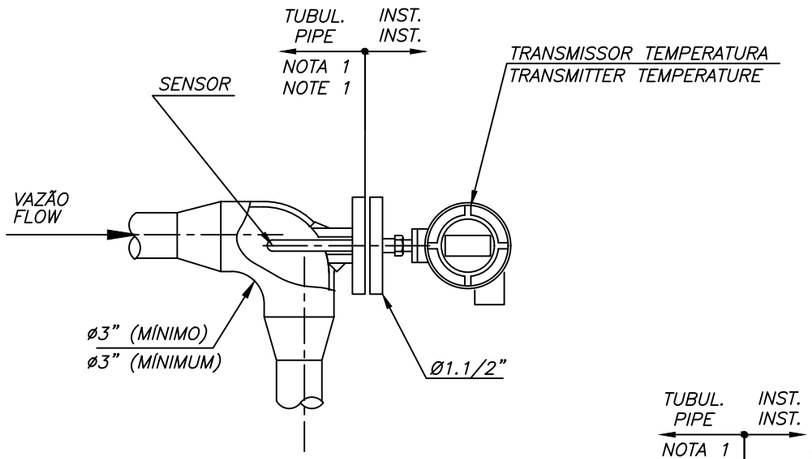

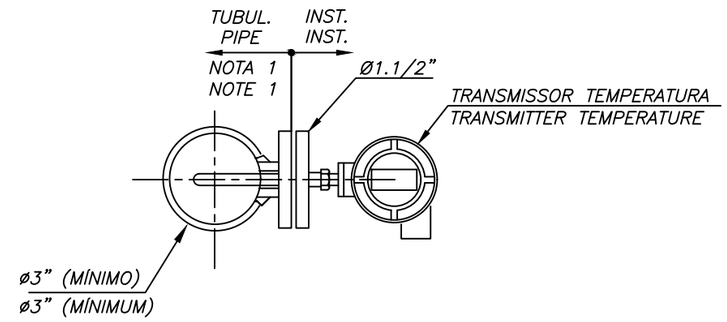

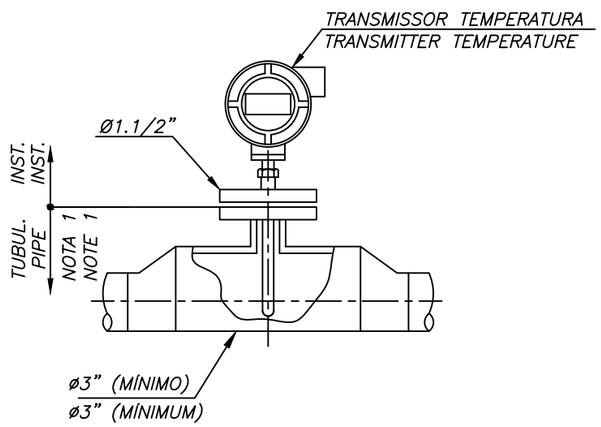

TIPICO DE PROCESSO
PROCESS TYPICAL

APPLICATION: TRANSMISSOR DE TEMPERATURA COM SENSOR / TEMPERATURE TRANSMITTER WITH SENSOR

TAG. Nº	TAG. Nº	TAG. Nº	TAG. Nº	TAG. Nº
7A–TIT–790314	7A–TIT–980052	7B–TIT–940010		
7A–TIT–790315	~~7A–TIT–980053~~	7B–TIT–980001		
7A–TIT–790317	7A–TIT–980056	~~7B–TIT–980002~~		
7A–TIT–940053	~~7A–TIT–980057~~	7B–TIT–980005		
7A–TIT–960006	7A–TIT–980060	7B–TIT–980013		
7A–TIT–960041	7A–TIT–980061	7B–TIT–980014		
7A–TIT–960061	7A–TIT–980075	~~7B–TIT–980015~~		
7A–TIT–960062	~~7A–TIT–980077~~	~~7B–TIT–980016~~		
7A–TIT–960063	7A–TIT–980080	7B–TIT–980021		
7A–TIT–960064	~~7A–TIT–980083~~	7B–TIT–980022		
~~7A–TIT–960065~~	7A–TIT–980086	7B–TIT–980029		
~~7A–TIT–960066~~	7B–TIT–070001	~~7B–TIT–980030~~		
7A–TIT–960075	7B–TIT–070002			
7A–TIT–960076	7B–TIT–070003			
~~7A–TIT–960077~~	7B–TIT–070065			
7A–TIT–960085	7B–TIT–070066			
7A–TIT–960088	7B–TIT–790319			
7A–TIT–9600120	7B–TIT–790321			
7A–TIT–9600135	7B–TIT–790327			
~~7A–TIT–9600150~~	7B–TIT–940009			

ESPEC: CS1 / CS2

ITEM ITEM	DESCRIÇÃO DESCRIPTION	MATERIAL MATERIAL	DIMENSÃO DIMENSION	UNID. UNIT	QTD QTY	TOTAL TOTAL
10						
9						
8						
7						
6						
5						
4						
3						
2						
1						

NOTAS:
NOTES:

1 – VEDAÇÃO, PARAFUSOS, PORCAS E ARRUELA, FORNECIDAS PELA TUBULAÇÃO, P/ ESPECIF. DESSES MATERIAIS CONSULTE PRD–PIP–TSP–501, ESPECIF. DE MAT. TUBULAÇÃO.

1 – SEAL JOINT, BOLTS, NUTS AND WASHER, SUPPLIED BY PIPE, FOR SPECIFICATION OF THESE MATERIALS SEE PRD–PIP–TSP–501, SPECIFICATION OF PIPING MATERIALS.

TESSLER engenharia | ips | Takeda | Hemobrás

DOC NR: 569-DB07-AIC-220-003

CLIENT NR: 07-I-0-8-03

DRAWING TITLE:
DRUG PRODUCT
BMS - INSTRUMENT TYPICAL INSTALLATION

SHEET: 13 OF 27

REV: 1

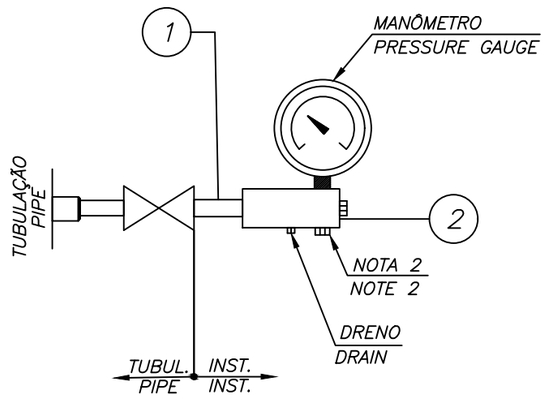

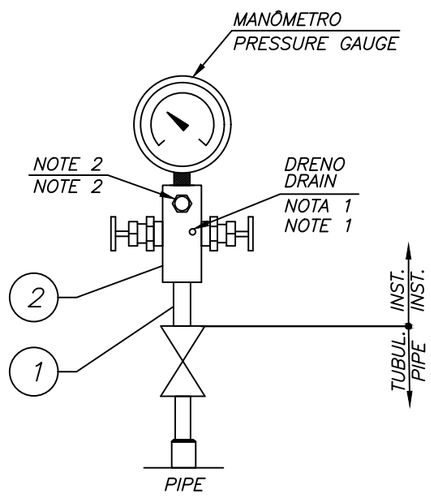

TIPICO DE PROCESSO
PROCESS TYPICAL

APPLICATION: MANÔMETRO / PRESSURE GAUGE

TAG. Nº	TAG. Nº	TAG. Nº	TAG. Nº	TAG. Nº
7A-PI-610001	~~7A-PI-980064~~	7B-PI-980024		
7A-PI-610002	7A-PI-980068	~~7B-PI-980025~~		
~~7A-PI-940049~~	~~7A-PI-980071~~	~~7B-PI-980027~~		
7A-PI-940050	7A-PI-9800160			
7A-PI-940051	7A-PI-9800161			
~~7A-PI-960001~~	7A-PI-9800162			
~~7A-PI-960002~~	7A-PI-9800163			
~~7A-PI-960006~~	7B-PI-070002			
~~7A-PI-960007~~	7B-PI-070003			
7A-PI-960030	~~7B-PI-070004~~			
7A-PI-960040	~~7B-PI-070005~~			
7A-PI-960050	7B-PI-610050			
7A-PI-960051	7B-PI-610051			
~~7A-PI-960052~~	~~7B-PI-940006~~			
7A-PI-960053	7B-PI-940008			
7A-PI-960054	7B-PI-980006			
7A-PI-960055	7B-PI-980007			
7A-PI-960056	~~7B-PI-980008~~			
~~7A-PI-960058~~	~~7B-PI-980009~~			
7A-PI-980063	7B-PI-980023			

ESPEC: CS1/ PP1

ITEM ITEM	DESCRIÇÃO DESCRIPTION	MATERIAL MATERIAL	DIMENSÃO DIMENSION	UNID. UNIT	QTD QTY	TOTAL TOTAL
10						
9						
8						
7						
6						
5						
4						
3						
2	VÁLVULA MULTIPLA, ASTM A182 GR F316, INT. ASTM A182 GR F316 - 3000#, ROSCA FÊMEA MULTIPLE VALVE, ASTM A182 GR F316, INT. ASTM A182 GR F316 - 3000#, FEMALE THREAD	AISI SS	1/2"NPT	PÇ PIECE	1	27
1	NIPLE DE TUBO ASTM A106, ASME B36.10, SC - SCH 80 - 100 mm. TUBE NIPLE ASTM A106, ASME B36.10, SC - SCH 80 - 100 mm.	AC CS	1/2"NPT	PÇ PIECE	1	27

NOTAS:
NOTES:

1- O DRENO DEVE SER SEMPRE ORIENTADO PARA O LADO OPOSTO DA ESCALA DE INSTRUMENTOS.
THE DRAIN MUST ALWAYS BE ORIENTED TO THE OPPOSITE SIDE OF THE INSTRUMENT SCALE.

2- CONEXÃO ADICIONAL PARA O INSTRUMENTO PARA MONTAGEM HORIZONTAL.
ADDITIONAL CONNECTION FOR INSTRUMENT FOR MOUNTING MULTIPLE VALVE HORIZONTALLY.

TESSLER engenharia | ips | Takeda | Hemobrás

DOC NR: 569-DB07-AIC-220-003

CLIENT NR: 07-I-0-8-03

DRAWING TITLE:
DRUG PRODUCT
BMS - INSTRUMENT TYPICAL INSTALLATION

SHEET: 14 OF 27

REV: 1

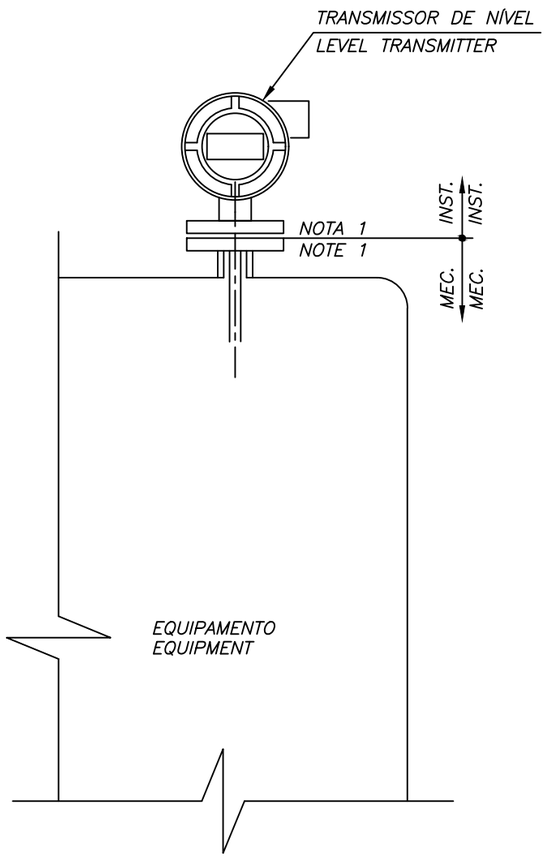

TIPICO DE PROCESSO
PROCESS TYPICAL

NOTAS:
NOTES:

1 – JUNTA DE VEDAÇÃO, PARAFUSOS, PORCAS E ARRUELA, FORNECIDOS PELA TUBULAÇÃO, PARA ESPECIFICAÇÃO DESSES MATERIAIS CONSULTE PRD–PIP–TSP–501, ESPECIFICAÇÃO DE MATERIAIS DE TUBULAÇÃO.
SEAL JOINT, BOLTS, NUTS AND WASHER, SUPPLIED BY PIPE, FOR SPECIFICATION OF THESE MATERIALS SEE PRD–PIP–TSP–501, SPECIFICATION OF PIPING MATERIALS.

APPLICATION: TRANSMISSOR DE NÍVEL / LEVEL TRANSMITTER

TAG. Nº	TAG. Nº	TAG. Nº	TAG. Nº	TAG. Nº
7A–LIT–980051				
7A–LIT–980052				
7B–LIT–980005				
7B–LIT–980006				

ESPEC: HVAC

ITEM / ITEM	DESCRIÇÃO / DESCRIPTION	MATERIAL / MATERIAL	DIMENSÃO / DIMENSION	UNID. / UNIT	QTD / QTY	TOTAL / TOTAL
10						
9						
8						
7						
6						
5						
4						
3						
2						
1						

TESSLER engenharia | ips | Takeda | Hemobrás

DOC NR: 569-DB07-AIC-220-003
CLIENT NR: 07-I-0-8-03

DRAWING TITLE:
DRUG PRODUCT
BMS - INSTRUMENT TYPICAL INSTALLATION

SHEET: 15 OF 27
REV: 1

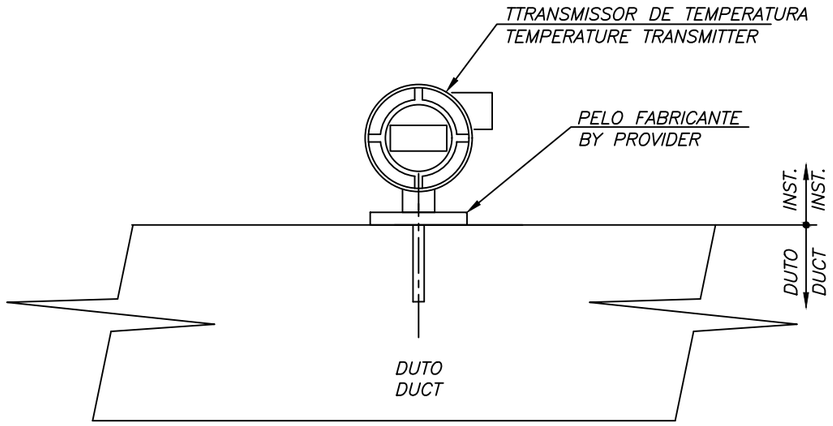

TIPICO DE PROCESSO
PROCESS TYPICAL

APPLICATION: TRANSMISSOR DE TEMPERATURA / TEMPERATURE TRANSMITTER

TAG. Nº	TAG. Nº	TAG. Nº	TAG. Nº	TAG. Nº
7B-TT-RH-B-1013-001	7B-TT-FCU-B1031-003	7B-TT-RH-B2002-1	7B-TT-RH-B2027-1	7B-TT-RH-B2047-1
7B-TT-RH-B-1016-001	7B-TT-FCU-B1031-004	7B-TT-RH-B2003-1	7B-TT-RH-B2028-1	7B-TT-RH-B2048-1
7B-TT-RH-B-1030-001	7B-TT-FCU-B1031-005	7B-TT-RH-B2004-1	7B-TT-RH-B2029-1	7B-TT-RH-B2050-1
7B-TT-RH-B-1035-001	7B-TT-FCU-B1032-001	7B-TT-RH-B2008-1	7B-TT-RH-B2030-1	7B-TT-RH-B2051-1
7B-TT-RH-B-1036-001	7B-TT-FCU-B1032-002	7B-TT-RH-B2010-1	7B-TT-RH-B2031-1	7B-TT-RH-B2052-1
7B-TT-RH-B-1038-001	7B-TT-FCU-B1032-003	7B-TT-RH-B2011-1	7B-TT-RH-B2032-1	7B-TT-RH-B2053-1
7B-TT-RH-B-1044-001	7B-TT-FCU-B1033-001	7B-TT-RH-B2012-1	7B-TT-RH-B2033-1	7B-TT-RH-B2054-1
7B-TT-RH-B-1045-001	7B-TT-FCU-B1033-002	7B-TT-RH-B2013-1	7B-TT-RH-B2034-1	7B-TT-RH-B2056-1
7B-TT-RH-B-1048-001	7B-TT-FCU-B1034-001	7B-TT-RH-B2014-1	7B-TT-RH-B2035-1	7B-TT-RH-B2057-1
7B-TT-RH-B-1049-001	7B-TT-FCU-B3010-001	7B-TT-RH-B2015-1	7B-TT-RH-B2036-1	
7B-TT-FCU-B1014-001	7B-TT-FCU-B3010-002	7B-TT-RH-B2016-1	7B-TT-RH-B2037-1	
7B-TT-FCU-B1014-002	7B-TT-FCU-B3011-001	7B-TT-RH-B2017-1	7B-TT-RH-B2038-1	
7B-TT-FCU-B1014-003	7B-TT-FCU-B3011-002	7B-TT-RH-B2018-1	7B-TT-RH-B2039-1	
7B-TT-FCU-B1014-004	7B-TT-RH-B1019-1	7B-TT-RH-B2019-1	7B-TT-RH-B2040-1	
7B-TT-FCU-B1015-001	7B-TT-RH-B1021-1	7B-TT-RH-B2020-1	7B-TT-RH-B2041-1	
7B-TT-FCU-B1015-002	7B-TT-RH-B1023-1	7B-TT-RH-B2021-1	7B-TT-RH-B2042-1	
7B-TT-FCU-B1015-003	7B-TT-RH-B1024-1	7B-TT-RH-B2023-1	7B-TT-RH-B2043-1	
7B-TT-FCU-B1029-001	7B-TT-RH-B1025-1	7B-TT-RH-B2024-1	7B-TT-RH-B2044-1	
7B-TT-FCU-B1031-001	7B-TT-RH-B1026-1	7B-TT-RH-B2025-1	7B-TT-RH-B2045-1	
7B-TT-FCU-B1031-002	7B-TT-RH-B2001-1	7B-TT-RH-B2026-1	7B-TT-RH-B2046-1	

ESPEC: HVAC

ITEM ITEM	DESCRIÇÃO DESCRIPTION	MATERIAL MATERIAL	DIMENSÃO DIMENSION	UNID. UNIT	QTD QTY	TOTAL TOTAL
10						
9						
8						
7						
6						
5						
4						
3						
2						
1						

TESSLER engenharia | ips | Takeda | Hemobrás Empresa brasileira de hemoderivados e biotecnologia

DOC NR: 569-DB07-AIC-220-003

CLIENT NR: 07-I-0-8-03

DRAWING TITLE:
DRUG PRODUCT
BMS - INSTRUMENT TYPICAL INSTALLATION

SHEET: 16 OF 27

REV: 1

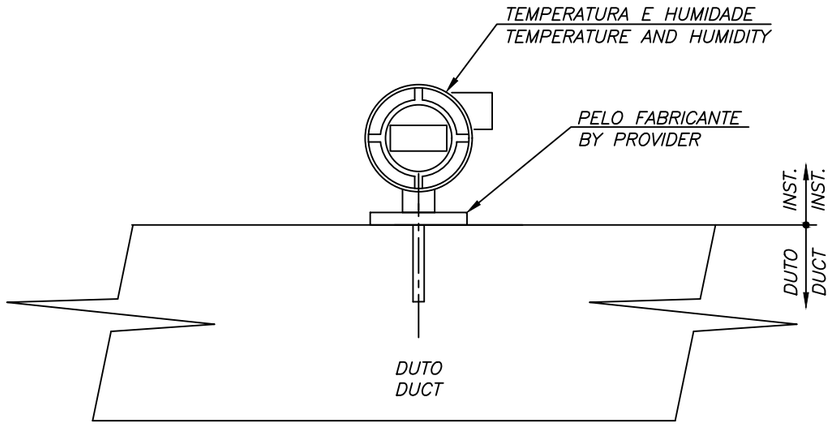

TIPICO DE PROCESSO
PROCESS TYPICAL

APPLICATION: TRANSMISSOR DE TEMPERATURA E HUMIDADE / TEMPERATURE AND HUMIDITY TRANSMITTER

TAG. Nº	TAG. Nº	TAG. Nº	TAG. Nº	TAG. Nº
TT/MT-AHU-7A-1-001	TT/MT-AHU-7B-4-001			
TT/MT-AHU-7A-1-002	TT/MT-AHU-7B-4-002			
TT/MT-AHU-7A-2-001	TT/MT-AHU-7B-5-001			
TT/MT-AHU-7A-2-002	TT/MT-AHU-7B-5-002			
TT/MT-AHU-7A-3-001	TT/MT-AHU-7B-6-001			
TT/MT-AHU-7A-3-002	TT/MT-AHU-7B-7-001			
TT/MT-AHU-7A-4-001	TT/MT-AHU-7B-7-002			
TT/MT-AHU-7A-4-002	TT/MT-AHU-7B-8-001			
TT/MT-AHU-7A-5-001	TT/MT-AHU-7B-8-002			
TT/MT-AHU-7A-5-002	TT/MT-AHU-7B-9-001			
TT/MT-AHU-7A-6-001	TT/MT-AHU-7B-9-002			
TT/MT-AHU-7A-6-002	TT/MT-DOAS-7B-001			
TT/MT-EF-7A-6A-001	TT/MT-EF-7B-6A-001			
TT/MT-DOAS-7A-001	TT/MT-EF-7B-9A-001			
TT/MT-AHU-7B-1-001	TT/MT-EF-7B-9B-001			
TT/MT-AHU-7B-1-002				
TT/MT-AHU-7B-2-001				
TT/MT-AHU-7B-2-002				
TT/MT-AHU-7B-3-001				
TT/MT-AHU-7B-3-002				

ESPEC: HVAC

ITEM ITEM	DESCRIÇÃO DESCRIPTION	MATERIAL MATERIAL	DIMENSÃO DIMENSION	UNID. UNIT	QTD QTY	TOTAL TOTAL
10						
9						
8						
7						
6						
5						
4						
3						
2						
1						

TESSLER engenharia | ips | Takeda | Hemobrás Empresa brasileira de hemoderivados e biotecnologia

DOC NR: 569-DB07-AIC-220-003

CLIENT NR: 07-I-0-8-03

DRAWING TITLE:
DRUG PRODUCT
BMS - INSTRUMENT TYPICAL INSTALLATION

SHEET: 17 OF 27

REV: 1

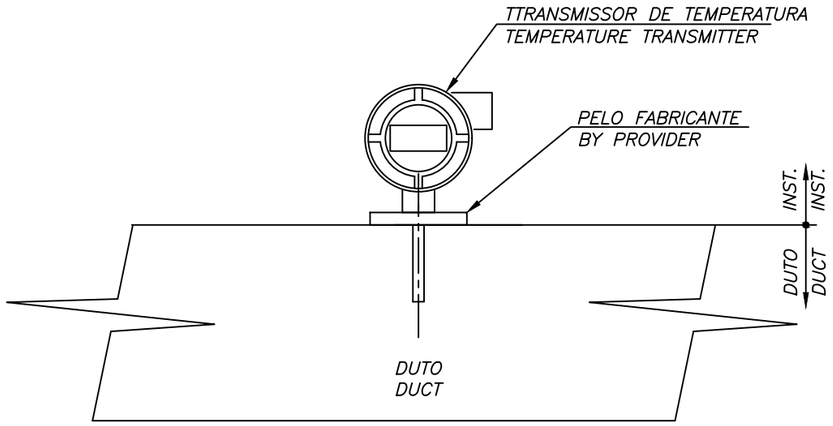

TIPICO DE PROCESSO
PROCESS TYPICAL

APPLICATION: TRANSMISSOR DE TEMPERATURA / TEMPERATURE TRANSMITTER

TAG. Nº	TAG. Nº	TAG. Nº	TAG. Nº	TAG. Nº
7A-TT-960001	7A-TT-9600237	7A-TT-RH-A-1039-1	7A-TT-RH-A-2022-1	7A-TT-RH-A-2042-1
7A-TT-960002	7A-TT-9600239	7A-TT-RH-A-1040-1	7A-TT-RH-A-2023-1	7A-TT-RH-A-2044-1
7A-TT-960003	7A-TT-9600241	7A-TT-RH-A-1062-1	7A-TT-RH-A-2024-1	7A-TT-RH-A-2046-1
7A-TT-960004	7A-TT-FCU-A3002-001	7A-TT-RH-A-2001-1	7A-TT-RH-A-2025-1	7A-TT-RH-A-2049-1
7A-TT-960005	7A-TT-RH-A-1001-1	7A-TT-RH-A-2002-1	7A-TT-RH-A-2026-1	7A-TT-RH-A-2050-1
7A-TT-960006	7A-TT-RH-A-1002-1	7A-TT-RH-A-2003-1	7A-TT-RH-A-2027-1	7A-TT-RH-A-2051-1
7A-TT-960020	7A-TT-RH-A-1003-1	7A-TT-RH-A-2004-1	7A-TT-RH-A-2028-1	7A-TT-RH-A-2052-1
7A-TT-DOAS-7A-002	7A-TT-RH-A-1004-1	7A-TT-RH-A-2005-1	7A-TT-RH-A-2029-1	7B-TT-960011
7A-TT-9600187	7A-TT-RH-A-1005-1	7A-TT-RH-A-2006-1	7A-TT-RH-A-2030-1	7B-TT-960012
7A-TT-9600191	7A-TT-RH-A-1014-1	7A-TT-RH-A-2007-1	7A-TT-RH-A-2031-1	7B-TT-960013
7A-TT-9600193	7A-TT-RH-A-1017-1	7A-TT-RH-A-2008-1	7A-TT-RH-A-2032-1	7B-TT-960014
7A-TT-9600213	7A-TT-RH-A-1018-1	7A-TT-RH-A-2009-1	7A-TT-RH-A-2033-1	7B-TT-960015
7A-TT-9600215	7A-TT-RH-A-1019-1	7A-TT-RH-A-2010-1	7A-TT-RH-A-2034-1	7B-TT-960016
7A-TT-9600217	7A-TT-RH-A-1023-1	7A-TT-RH-A-2011-1	7A-TT-RH-A-2035-1	7B-TT-960017
7A-TT-9600221	7A-TT-RH-A-1025-1	7A-TT-RH-A-2012-1	7A-TT-RH-A-2036-1	7B-TT-960018
7A-TT-9600223	7A-TT-RH-A-1029-1	7A-TT-RH-A-2013-1	7A-TT-RH-A-2037-1	7B-TT-960019
7A-TT-9600225	7A-TT-RH-A-1032-1	7A-TT-RH-A-2014-1	7A-TT-RH-A-2038-1	7B-TT-960028
7A-TT-9600227	7A-TT-RH-A-1034-1	7A-TT-RH-A-2015-1	7A-TT-RH-A-2039-1	7B-TT-RH-B-1004-001
7A-TT-9600229	7A-TT-RH-A-1037-1	7A-TT-RH-A-2016-1	7A-TT-RH-A-2040-1	7B-TT-RH-B-1009-001
7A-TT-9600231	7A-TT-RH-A-1038-1	7-TT-RH-A-2017-1	7A-TT-RH-A-2041-1	7B-TT-RH-B-1012-001

ESPEC: HVAC

ITEM ITEM	DESCRIÇÃO DESCRIPTION	MATERIAL MATERIAL	DIMENSÃO DIMENSION	UNID. UNIT	QTD QTY	TOTAL TOTAL
10						
9						
8						
7						
6						
5						
4						
3						
2						
1						

TESSLER engenharia | ips | Takeda | Hemobrás

DOC NR: 569-DB07-AIC-220-003

CLIENT NR: 07-I-0-8-03

DRAWING TITLE:
DRUG PRODUCT
BMS - INSTRUMENT TYPICAL INSTALLATION

SHEET: 18 OF 27

REV: 1

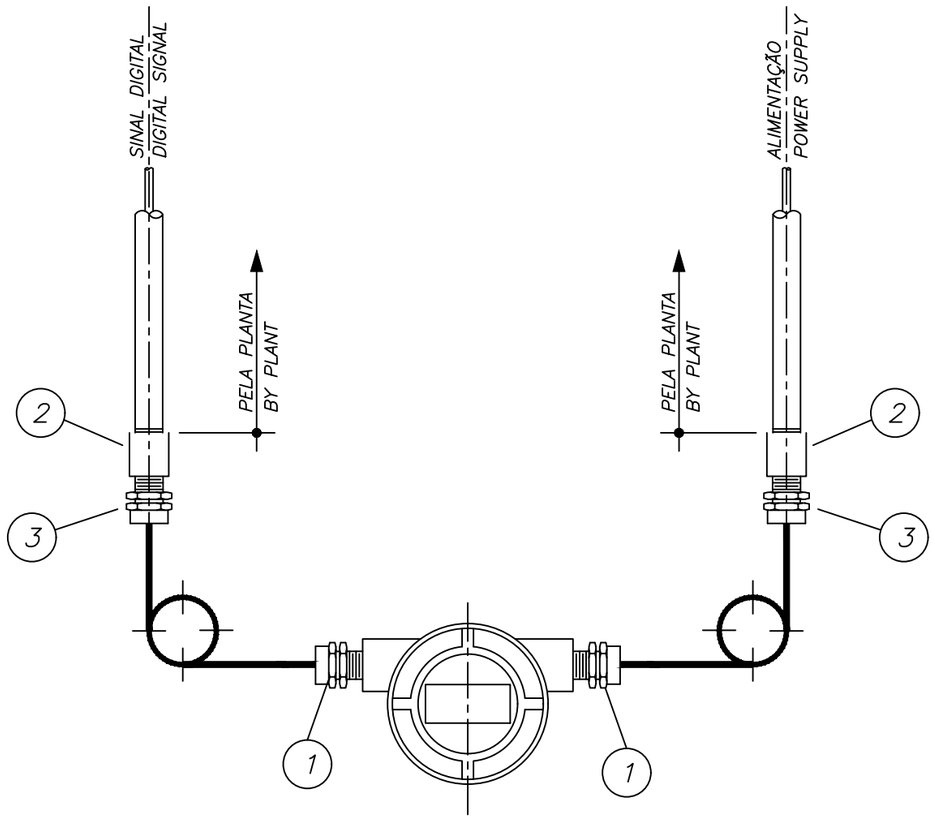

TIPICO ELÉTRICO
ELECTRIC TYPICAL

APPLICATION: TRANSMISSOR 4 FIOS / TRANSMITTER 4 WIRES

TAG. Nº	TAG. Nº	TAG. Nº	TAG. Nº	TAG. Nº
7A–FIT–610001	~~7A–FIT–960077~~	7B–FIT–790319		
7A–FIT–790312	7A–FIT–960085	7B–FIT–940035		
7A–FIT–790315		7B–FIT–070001		
7A–FIT–790317		7B–FIT–070001		
7A–FIT–980056		7B–FIT–070065		
~~7A–FIT–980057~~		7B–FIT–610050		
7A–FIT–980060		7B–FIT–980005		
7A–FIT–980075		7B–FIT–980014		
~~7A–FIT–980077~~		~~7B–FIT–980016~~		
7A–FIT–960088		7B–FIT–980021		
7A–FIT–940053		7B–FIT–980029		
7A–FIT–940054		~~7B–FIT–980030~~		
7A–FIT–940075				
7A–FIT–960001				
7A–FIT–960006				
7A–FIT–960062				
7A–FIT–960064				
~~7A–FIT–960066~~				
7A–FIT–960075				
7A–FIT–960076				

ITEM ITEM	DESCRIÇÃO DESCRIPTION	MATERIAL MATERIAL	DIMENSÃO DIMENSION	UNID. UNIT	QTD QTY	TOTAL TOTAL
10						
9						
8						
7						
6						
5						
4						
3	PRENSA CABO A PROVA DE TEMPO, P/ CABO C/ Ø ext. 6 a 12mm. CABLE PRESS PROOF OF TIME, P/ CABLE C/ Ø ext. 6 to 12mm.	POLIAMIDA POLYAMIDE	3/4" NPT	pcs PIECE	2	56
2	LUVA PARA ELETRODUTO SEMI–PESADO, GALVANIZ. ROSCA NPT. GLOVE FOR SEMI–HEAVY DUCT, GALVANIZ. NPT THREAD.	A.C. CS	3/4" NPT	pcs PIECE	2	56
1	PRENSA CABO A PROVA DE TEMPO, P/ CABO C/ Ø ext. 6 a 12mm. CABLE PRESS PROOF OF TIME, P/ CABLE C/ Ø ext. 6 to 12mm.	POLIAMIDA POLYAMIDE	1/2"NPT	pcs PIECE	2	56

TESSLER engenharia | ips | Takeda | Hemobrás

DOC NR: 569-DB07-AIC-220-003

CLIENT NR: 07-I-0-8-03

DRAWING TITLE:
DRUG PRODUCT
BMS - INSTRUMENT TYPICAL INSTALLATION

SHEET: 19 OF 27

REV: 1

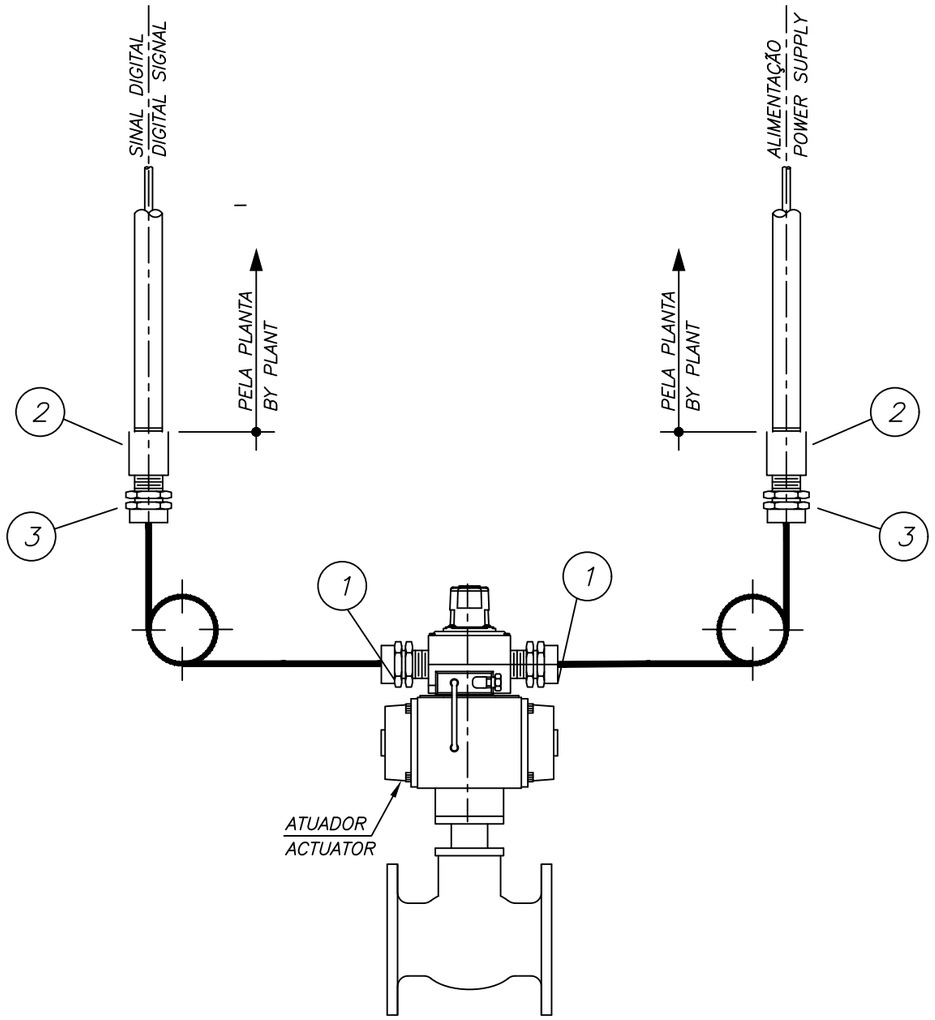

TIPICO ELÉTRICO
ELECTRIC TYPICAL

APPLICATION: VÁLVULA MOTORIZADA / MOTORIZED VALVE

TAG. Nº	TAG. Nº	TAG. Nº	TAG. Nº	TAG. Nº
7A-PV-960059				
7A-XV-960004				
7A-XV-960005				
~~7A-XV-960006~~				
7A-XV-9600120				
7A-XV-9600135				
~~7A-XV-9600150~~				
7A-XV-980056				
~~7A-XV-980057~~				
7A-XV-980080				
~~7A-XV-980083~~				
7B-XV-980001				
~~7B-XV-980002~~				
7B-XV-980014				
~~7B-XV-980016~~				

ITEM ITEM	DESCRIÇÃO DESCRIPTION	MATERIAL MATERIAL	DIMENSÃO DIMENSION	UNID. UNIT	QTD QTY	TOTAL TOTAL
10						
9						
8						
7						
6						
5						
4						
3	PRENSA CABO A PROVA DE TEMPO, P/ CABO C/ Ø ext. 6 a 12mm. CABLE PRESS PROOF OF TIME, P/ CABLE C/ Ø ext. 6 to 12mm.	POLIAMIDA POLYAMIDE	3/4" NPT	pcs PIECE	2	30
2	LUVA PARA ELETRODUTO SEMI-PESADO, GALVANIZ. ROSCA NPT. GLOVE FOR SEMI-HEAVY DUCT, GALVANIZ. NPT THREAD.	A.C. CS	3/4" NPT	pcs PIECE	2	30
1	PRENSA CABO A PROVA DE TEMPO, P/ CABO C/ Ø ext. 6 a 12mm. CABLE PRESS PROOF OF TIME, P/ CABLE C/ Ø ext. 6 to 12mm.	POLIAMIDA POLYAMIDE	1/2"NPT	pcs PIECE	2	30

TESSLER engenharia | ips | Takeda | Hemobrás Empresa brasileira de hemoderivados e biotecnologia

DOC NR: 569-DB07-AIC-220-003

CLIENT NR: 07-I-0-8-03

DRAWING TITLE:
DRUG PRODUCT
BMS - INSTRUMENT TYPICAL INSTALLATION

SHEET: 20 OF 27

REV: 1

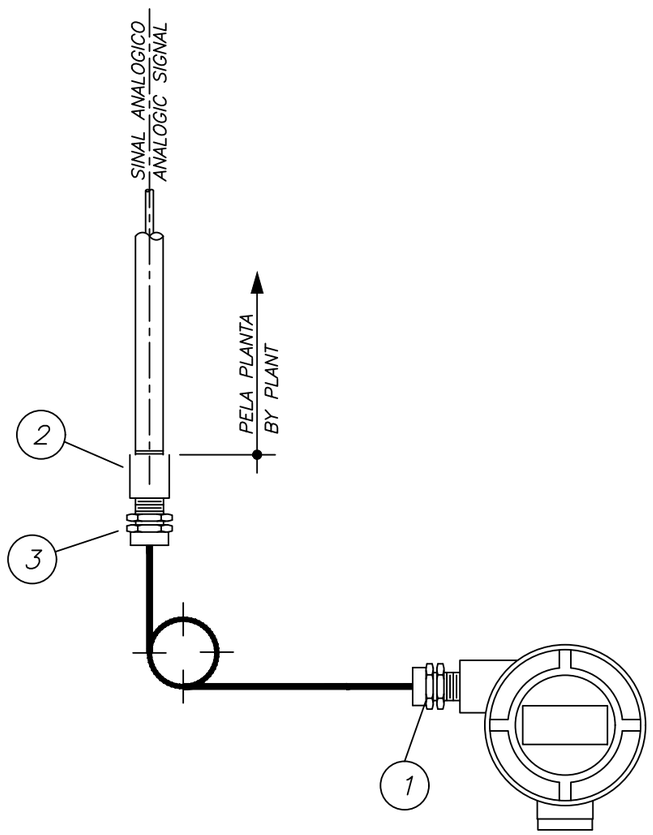

TIPICO ELÉTRICO
ELECTRIC TYPICAL

APPLICATION: TRANSMISSOR 2 FIOS / TRANSMITTER 2-WIRE

TAG. Nº	TAG. Nº	TAG. Nº	TAG. Nº	TAG. Nº
7A-FIT-610001	~~7A-FIT-980057~~	7B-LIT-980005	PDS-AHU-7B-5-001	PDT-RAV-A-2032-1
7A-FIT-790314	7A-FIT-980060	7B-LIT-980006	PDS-AHU-7B-6-001	PDT-RAV-A-2033-1
7A-FIT-790315	7A-FIT-980075	7A-PDIT-9600234	PDS-AHU-7B-7-001	PDT-RAV-A-2034-1
7A-FIT-790317	~~7A-FIT-980077~~	7A-PDIT-970005	PDS-AHU-7B-8-001	PDT-RAV-A-2035-1
7A-FIT-940053	7B-FIT-070001	7A-PDIT-980163	PDS-AHU-7B-9-001	PDT-RAV-A-2036-1
7A-FIT-940054	7B-FIT-070002	7B-PDIT-070001	PDT-RAV-A-2001-1	PDT-RAV-A-2037-1
7A-FIT-940075	7B-FIT-070065	7B-PDIT-960008	PDT-RAV-A-2002-1	PDT-RAV-A-2038-1
7A-FIT-940090	7B-FIT-610050	7B-PDIT-970001	PDT-RAV-A-2003-1	PDT-RAV-A-2039-1
7A-FIT-940092	7B-FIT-790319	7B-PDIT-980010	PDT-RAV-A-2005-1	PDT-RAV-A-2040-1
7A-FIT-960001	7B-FIT-940009	7A-PDIT-980163	PDT-RAV-A-2007-1	PDT-RAV-A-2041-1
7A-FIT-960006	7B-FIT-940015	PDS-AHU-7A-1-001	PDT-RAV-A-2009-1	PDT-RAV-A-2044-1
7A-FIT-960062	7B-FIT-940023	PDS-AHU-7A-2-001	PDT-RAV-A-2017-1	PDT-RAV-A-2046-1
7A-FIT-960064	7B-FIT-940035	PDS-AHU-7A-3-001	PDT-RAV-A-2023-1	PDT-RAV-B-1023-4
~~7A-FIT-960066~~	7B-FIT-980014	PDS-AHU-7A-4-001	PDT-RAV-A-2025-1	PDT-RAV-B-1024-1
7A-FIT-960075	~~7B-FIT-980016~~	PDS-AHU-7A-5-001	PDT-RAV-A-2026-1	PDT-RAV-B-1025-1
7A-FIT-960076	7B-FIT-980021	PDS-AHU-7A-6-001	PDT-RAV-A-2027-1	PDT-RAV-B-2001-1
~~7A-FIT-960077~~	7B-FIT-980029	PDS-AHU-7B-1-001	PDT-RAV-B-2028-1	PDT-RAV-B-2002-1
7A-FIT-960085	~~7B-FIT-980030~~	PDS-AHU-7B-2-001	PDT-RAV-A-2029-1	PDT-RAV-B-2003-1
7A-FIT-960088	7A-LIT-980051	PDS-AHU-7B-3-001	PDT-RAV-A-2030-1	PDT-RAV-B-2004-1
7A-FIT-980056	7A-LIT-980052	PDS-AHU-7B-4-001	PDT-RAV-A-2031-1	PDT-RAV-B-2008-1

ITEM ITEM	DESCRIÇÃO DESCRIPTION	MATERIAL MATERIAL	DIMENSÃO DIMENSION	UNID. UNIT	QTD QTY	TOTAL TOTAL
10						
9						
8						
7						
6						
5						
4						
3	PRENSA CABO A PROVA DE TEMPO, P/ CABO C/ Ø ext. 6 a 12mm. CABLE PRESS PROOF OF TIME, P/ CABLE C/ Ø ext. 6 to 12mm.	POLIAMIDA POLYAMIDE	3/4" NPT	pcs PIECE	1	94
2	LUVA PARA ELETRODUTO SEMI-PESADO, GALVANIZ. ROSCA NPT. GLOVE FOR SEMI-HEAVY DUCT, GALVANIZ. NPT THREAD.	A.C. CS	3/4" NPT	pcs PIECE	1	94
1	PRENSA CABO A PROVA DE TEMPO, P/ CABO C/ Ø ext. 6 a 12mm. CABLE PRESS PROOF OF TIME, P/ CABLE C/ Ø ext. 6 to 12mm.	POLIAMIDA POLYAMIDE	1/2"NPT	pcs PIECE	1	94

TESSLER engenharia | ips | Takeda | Hemobrás

DOC NR: 569-DB07-AIC-220-003

CLIENT NR: 07-I-0-8-03

DRAWING TITLE:
DRUG PRODUCT
BMS - INSTRUMENT TYPICAL INSTALLATION

SHEET: 21 OF 27

REV: 1

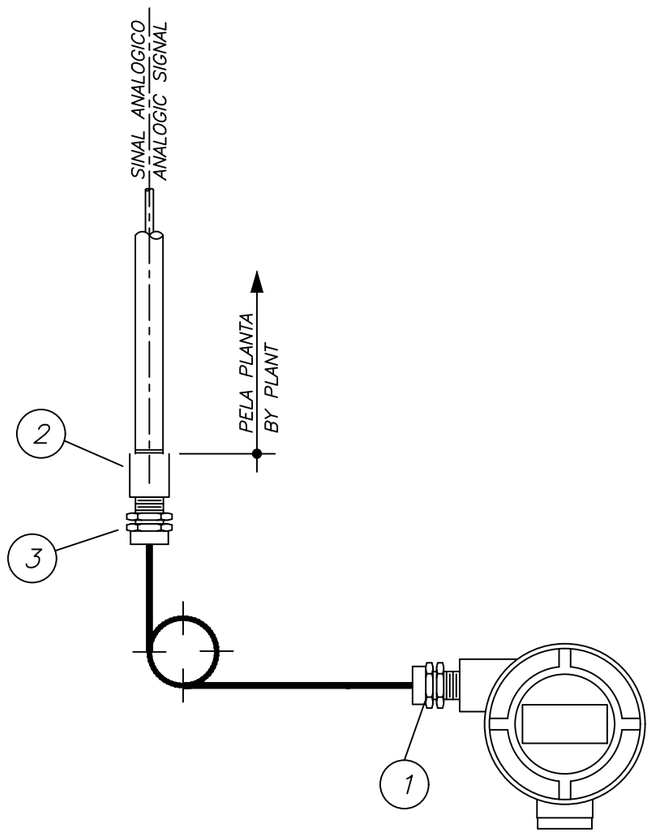

TIPICO ELÉTRICO
ELECTRIC TYPICAL

APPLICATION: TRANSMISSOR 2 FIOS / TRANSMITTER 2-WIRE

TAG. Nº	TAG. Nº	TAG. Nº	TAG. Nº	TAG. Nº
PDT-RAV-B-2010-1	PDT-RAV-B-2031-1	PDT-RAV-B-2054-1	~~7A-PIT-960077~~	7B-PIT-790104
PDT-RAV-B-2011-1	PDT-RAV-B-2032-1	PDT-RAV-B-2057-1	7A-PIT-960078	7B-PIT-790212
PDT-RAV-B-2012-1	PDT-RAV-B-2033-1	PDT-RAV-B-2058-1	7A-PIT-960085	7B-PIT-790319
PDT-RAV-B-2013-1	PDT-RAV-B-2034-1	PDT-RAV-B-2059-1	7A-PIT-960088	7B-PIT-790321
PDT-RAV-B-2014-1	PDT-RAV-B-2035-1	7A-PIT-790101	7A-PIT-9600120	7B-PIT-790327
PDT-RAV-B-2015-1	PDT-RAV-B-2036-1	7A-PIT-790201	7A-PIT-9600135	7B-PIT-840021
PDT-RAV-B-2016-1	PDT-RAV-B-2037-1	7A-PIT-790314	7A-PIT-9600150	7B-PIT-940009
PDT-RAV-B-2017-1	PDT-RAV-B-2038-1	7A-PIT-790315	7A-PIT-980052	7B-PIT-940010
PDT-RAV-B-2018-1	PDT-RAV-B-2039-1	7A-PIT-790317	~~7A-PIT-980053~~	7B-PIT-980001
PDT-RAV-B-2019-1	PDT-RAV-B-2040-1	7A-PIT-940020	7A-PIT-980056	~~7B-PIT-980002~~
PDT-RAV-B-2020-1	PDT-RAV-B-2041-1	7A-PIT-940053	~~7A-PIT-980057~~	7B-PIT-980005
PDT-RAV-B-2021-1	PDT-RAV-B-2042-1	7A-PIT-960059	7A-PIT-980060	7B-PIT-980013
PDT-RAV-B-2022-1	PDT-RAV-B-2043-1	7A-PIT-960061	7A-PIT-980075	7B-PIT-980014
PDT-RAV-B-2023-1	PDT-RAV-B-2044-1	7A-PIT-960062	~~7A-PIT-980077~~	~~7B-PIT-980015~~
PDT-RAV-B-2024-1	PDT-RAV-B-2045-1	7A-PIT-960063	7A-PIT-980080	~~7B-PIT-980016~~
PDT-RAV-B-2025-1	PDT-RAV-B-2046-1	7A-PIT-960064	~~7A-PIT-980083~~	7B-PIT-980021
PDT-RAV-B-2026-1	PDT-RAV-B-2047-1	7A-PIT-960065	7B-PIT-070001	7B-PIT-980029
PDT-RAV-B-2027-1	PDT-RAV-B-2048-1	~~7A-PIT-960066~~	7B-PIT-070002	~~7B-PIT-980030~~
PDT-RAV-B-2028-1	PDT-RAV-B-2050-1	7A-PIT-960075	7B-PIT-070065	PT-AHU-7A-1-001
PDT-RAV-B-2030-1	PDT-RAV-B-2053-1	7A-PIT-960076	7B-PIT-070066	PT-AHU-7A-1-002

ITEM ITEM	DESCRIÇÃO DESCRIPTION	MATERIAL MATERIAL	DIMENSÃO DIMENSION	UNID. UNIT	QTD QTY	TOTAL TOTAL
10						
9						
8						
7						
6						
5						
4						
3	PRENSA CABO A PROVA DE TEMPO, P/ CABO C/ Ø ext. 6 a 12mm. CABLE PRESS PROOF OF TIME, P/ CABLE C/ Ø ext. 6 to 12mm.	POLIAMIDA POLYAMIDE	3/4" NPT	pcs PIECE	1	90
2	LUVA PARA ELETRODUTO SEMI-PESADO, GALVANIZ. ROSCA NPT. GLOVE FOR SEMI-HEAVY DUCT, GALVANIZ. NPT THREAD.	A.C. CS	3/4" NPT	pcs PIECE	1	90
1	PRENSA CABO A PROVA DE TEMPO, P/ CABO C/ Ø ext. 6 a 12mm. CABLE PRESS PROOF OF TIME, P/ CABLE C/ Ø ext. 6 to 12mm.	POLIAMIDA POLYAMIDE	1/2"NPT	pcs PIECE	1	90

TESSLER engenharia | ips | Takeda | Hemobrás

DOC NR: 569-DB07-AIC-220-003

CLIENT NR: 07-I-0-8-03

DRAWING TITLE:
DRUG PRODUCT
BMS - INSTRUMENT TYPICAL INSTALLATION

SHEET: 22 OF 27

REV: 1

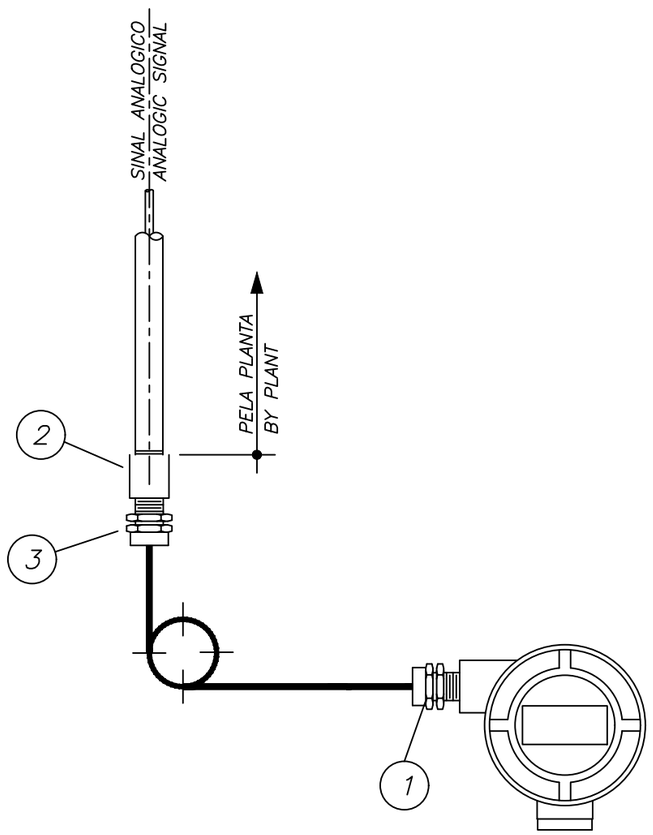

TIPICO ELÉTRICO
ELECTRIC TYPICAL

APPLICATION: TRANSMISSOR 2 FIOS / TRANSMITTER 2-WIRE

TAG. Nº	TAG. Nº	TAG. Nº	TAG. Nº	TAG. Nº
7B-TT-RH-B-1013-001	7B-TT-FCU-B1031-003	7B-TT-RH-B2002-1	7B-TT-RH-B2027-1	7B-TT-RH-B2047-1
7B-TT-RH-B-1016-001	7B-TT-FCU-B1031-004	7B-TT-RH-B2003-1	7B-TT-RH-B2028-1	7B-TT-RH-B2048-1
7B-TT-RH-B-1030-001	7B-TT-FCU-B1031-005	7B-TT-RH-B2004-1	7B-TT-RH-B2029-1	7B-TT-RH-B2050-1
7B-TT-RH-B-1035-001	7B-TT-FCU-B1032-001	7B-TT-RH-B2008-1	7B-TT-RH-B2030-1	7B-TT-RH-B2051-1
7B-TT-RH-B-1036-001	7B-TT-FCU-B1032-002	7B-TT-RH-B2010-1	7B-TT-RH-B2031-1	7B-TT-RH-B2052-1
7B-TT-RH-B-1038-001	7B-TT-FCU-B1032-003	7B-TT-RH-B2011-1	7B-TT-RH-B2032-1	7B-TT-RH-B2053-1
7B-TT-RH-B-1044-001	7B-TT-FCU-B1033-001	7B-TT-RH-B2012-1	7B-TT-RH-B2033-1	7B-TT-RH-B2054-1
7B-TT-RH-B-1045-001	7B-TT-FCU-B1033-002	7B-TT-RH-B2013-1	7B-TT-RH-B2034-1	7B-TT-RH-B2056-1
7B-TT-RH-B-1048-001	7B-TT-FCU-B1034-001	7B-TT-RH-B2014-1	7B-TT-RH-B2035-1	7B-TT-RH-B2057-1
7B-TT-RH-B-1049-001	7B-TT-FCU-B3010-001	7B-TT-RH-B2015-1	7B-TT-RH-B2036-1	7A-TIT-790314
7B-TT-FCU-B1014-001	7B-TT-FCU-B3010-002	7B-TT-RH-B2016-1	7B-TT-RH-B2037-1	7A-TIT-790315
7B-TT-FCU-B1014-002	7B-TT-FCU-B3011-001	7B-TT-RH-B2017-1	7B-TT-RH-B2038-1	7A-TIT-790317
7B-TT-FCU-B1014-003	7B-TT-FCU-B3011-002	7B-TT-RH-B2018-1	7B-TT-RH-B2039-1	7A-TIT-940053
7B-TT-FCU-B1014-004	7B-TT-RH-B1019-1	7B-TT-RH-B2019-1	7B-TT-RH-B2040-1	7A-TIT-960006
7B-TT-FCU-B1015-001	7B-TT-RH-B1021-1	7B-TT-RH-B2020-1	7B-TT-RH-B2041-1	7A-TIT-960041
7B-TT-FCU-B1015-002	7B-TT-RH-B1023-1	7B-TT-RH-B2021-1	7B-TT-RH-B2042-1	7A-TIT-960061
7B-TT-FCU-B1015-003	7B-TT-RH-B1024-1	7B-TT-RH-B2023-1	7B-TT-RH-B2043-1	7A-TIT-960062
7B-TT-FCU-B1029-001	7B-TT-RH-B1025-1	7B-TT-RH-B2024-1	7B-TT-RH-B2044-1	7A-TIT-960063
7B-TT-FCU-B1031-001	7B-TT-RH-B1026-1	7B-TT-RH-B2025-1	7B-TT-RH-B2045-1	7A-TIT-960064
7B-TT-FCU-B1031-002	7B-TT-RH-B2001-1	7B-TT-RH-B2026-1	7B-TT-RH-B2046-1	7A-TIT-960065

ITEM ITEM	DESCRIÇÃO DESCRIPTION	MATERIAL MATERIAL	DIMENSÃO DIMENSION	UNID. UNIT	QTD QTY	TOTAL TOTAL
10						
9						
8						
7						
6						
5						
4						
3	PRENSA CABO A PROVA DE TEMPO, P/ CABO C/ Ø ext. 6 a 12mm. CABLE PRESS PROOF OF TIME, P/ CABLE C/ Ø ext. 6 to 12mm.	POLIAMIDA POLYAMIDE	3/4" NPT	pcs PIECE	1	100
2	LUVA PARA ELETRODUTO SEMI-PESADO, GALVANIZ. ROSCA NPT. GLOVE FOR SEMI-HEAVY DUCT, GALVANIZ. NPT THREAD.	A.C. CS	3/4" NPT	pcs PIECE	1	100
1	PRENSA CABO A PROVA DE TEMPO, P/ CABO C/ Ø ext. 6 a 12mm. CABLE PRESS PROOF OF TIME, P/ CABLE C/ Ø ext. 6 to 12mm.	POLIAMIDA POLYAMIDE	1/2"NPT	pcs PIECE	1	100

TESSLER engenharia | ips | Takeda | Hemobrás

DOC NR: 569-DB07-AIC-220-003

CLIENT NR: 07-I-0-8-03

DRAWING TITLE:
DRUG PRODUCT
BMS - INSTRUMENT TYPICAL INSTALLATION

SHEET: 23 OF 27

REV: 1

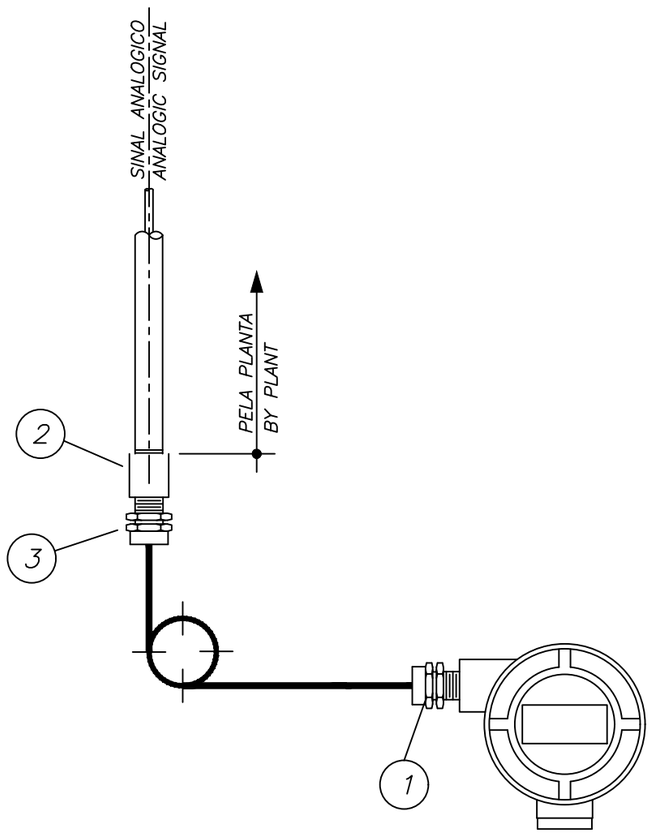

TIPICO ELÉTRICO
ELECTRIC TYPICAL

APPLICATION: TRANSMISSOR 2 FIOS / TRANSMITTER 2-WIRE

TAG. Nº	TAG. Nº	TAG. Nº	TAG. Nº	TAG. Nº
~~7A-TIT-960066~~	7B-TIT-070001	~~7B-TIT-980030~~	TT/MT-AHU-7B-3-002	7A-TT-960005
7A-TIT-960075	7B-TIT-070002	TT/MT-AHU-7A-1-001	TT/MT-AHU-7B-4-001	7A-TT-960006
7A-TIT-960076	7B-TIT-070003	TT/MT-AHU-7A-1-002	TT/MT-AHU-7B-4-002	7A-TT-960020
~~7A-TIT-960077~~	7B-TIT-070065	TT/MT-AHU-7A-2-001	TT/MT-AHU-7B-5-001	7A-TT-DOAS-7A-002
7A-TIT-960085	7B-TIT-070066	TT/MT-AHU-7A-2-002	TT/MT-AHU-7B-5-002	7A-TT-9600187
7A-TIT-960088	7B-TIT-790319	TT/MT-AHU-7A-3-001	TT/MT-AHU-7B-6-001	7A-TT-9600191
7A-TIT-9600120	7B-TIT-790321	TT/MT-AHU-7A-3-002	TT/MT-AHU-7B-7-001	7A-TT-9600193
7A-TIT-9600135	7B-TIT-790327	TT/MT-AHU-7A-4-001	TT/MT-AHU-7B-7-002	7A-TT-9600213
7A-TIT-9600150	7B-TIT-940009	TT/MT-AHU-7A-4-002	TT/MT-AHU-7B-8-001	7A-TT-9600215
7A-TIT-980052	7B-TIT-940010	TT/MT-AHU-7A-5-001	TT/MT-AHU-7B-8-002	7A-TT-9600217
~~7A-TIT-980053~~	7B-TIT-980001	TT/MT-AHU-7A-5-002	TT/MT-AHU-7B-9-001	7A-TT-9600221
7A-TIT-980056	~~7B-TIT-980002~~	TT/MT-AHU-7A-6-001	TT/MT-AHU-7B-9-002	7A-TT-9600223
7A-TIT-980057	7B-TIT-980005	TT/MT-AHU-7A-6-002	TT/MT-DOAS-7B-001	7A-TT-9600225
7A-TIT-980060	7B-TIT-980013	TT/MT-EF-7A-6A-001	TT/MT-EF-7B-6A-001	7A-TT-9600227
7A-TIT-980061	7B-TIT-980014	TT/MT-DOAS-7A-001	TT/MT-EF-7B-9A-001	7A-TT-9600229
7A-TIT-980075	~~7B-TIT-980015~~	TT/MT-AHU-7B-1-001	TT/MT-EF-7B-9B-001	7A-TT-9600231
~~7A-TIT-980077~~	~~7B-TIT-980016~~	TT/MT-AHU-7B-1-002	7A-TT-960001	7A-TT-9600237
7A-TIT-980080	7B-TIT-980021	TT/MT-AHU-7B-2-001	7A-TT-960002	7A-TT-9600239
~~7A-TIT-980083~~	7B-TIT-980022	TT/MT-AHU-7B-2-002	7A-TT-960003	7A-TT-9600241
7A-TIT-980086	7B-TIT-980029	TT/MT-AHU-7B-3-001	7A-TT-960004	7A-TT-FCU-A3002-001

ITEM ITEM	DESCRIÇÃO DESCRIPTION	MATERIAL MATERIAL	DIMENSÃO DIMENSION	UNID. UNIT	QTD QTY	TOTAL TOTAL
10						
9						
8						
7						
6						
5						
4						
3	PRENSA CABO A PROVA DE TEMPO, P/ CABO C/ Ø ext. 6 a 12mm. CABLE PRESS PROOF OF TIME, P/ CABLE C/ Ø ext. 6 to 12mm.	POLIAMIDA POLYAMIDE	3/4" NPT	pcs PIECE	1	91
2	LUVA PARA ELETRODUTO SEMI-PESADO, GALVANIZ. ROSCA NPT. GLOVE FOR SEMI-HEAVY DUCT, GALVANIZ. NPT THREAD.	A.C. CS	3/4" NPT	pcs PIECE	1	91
1	PRENSA CABO A PROVA DE TEMPO, P/ CABO C/ Ø ext. 6 a 12mm. CABLE PRESS PROOF OF TIME, P/ CABLE C/ Ø ext. 6 to 12mm.	POLIAMIDA POLYAMIDE	1/2"NPT	pcs PIECE	1	91

TESSLER engenharia | ips | Takeda | Hemobrás

DOC NR: 569-DB07-AIC-220-003

CLIENT NR: 07-I-0-8-03

DRAWING TITLE:
DRUG PRODUCT
BMS - INSTRUMENT TYPICAL INSTALLATION

SHEET: 24 OF 27

REV: 1

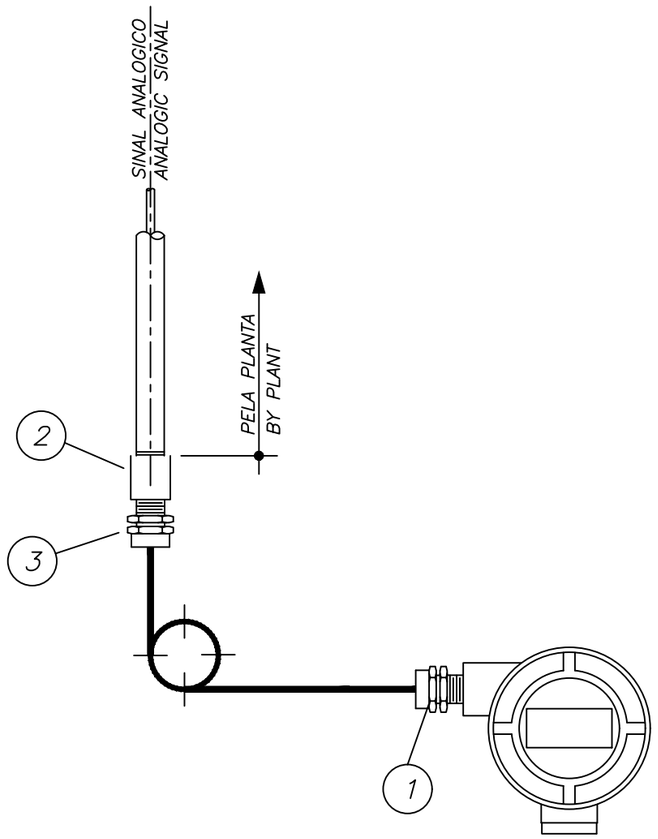

TIPICO ELÉTRICO
ELECTRIC TYPICAL

APPLICATION: TRANSMISSOR 2 FIOS / TRANSMITTER 2-WIRE

TAG. Nº	TAG. Nº	TAG. Nº	TAG. Nº	TAG. Nº
7A-TT-RH-A-1001-1	7A-TT-RH-A-2002-1	7A-TT-RH-A-2026-1	7A-TT-RH-A-2050-1	
7A-TT-RH-A-1002-1	7A-TT-RH-A-2003-1	7A-TT-RH-A-2027-1	7A-TT-RH-A-2051-1	
7A-TT-RH-A-1003-1	7A-TT-RH-A-2004-1	7A-TT-RH-A-2028-1	7A-TT-RH-A-2052-1	
7A-TT-RH-A-1004-1	7A-TT-RH-A-2005-1	7A-TT-RH-A-2029-1	7B-TT-960011	
7A-TT-RH-A-1005-1	7A-TT-RH-A-2006-1	7A-TT-RH-A-2030-1	7B-TT-960012	
7A-TT-RH-A-1014-1	7A-TT-RH-A-2007-1	7A-TT-RH-A-2031-1	7B-TT-960013	
7A-TT-RH-A-1017-1	7A-TT-RH-A-2008-1	7A-TT-RH-A-2032-1	7B-TT-960014	
7A-TT-RH-A-1018-1	7A-TT-RH-A-2009-1	7A-TT-RH-A-2033-1	7B-TT-960015	
7A-TT-RH-A-1019-1	7A-TT-RH-A-2010-1	7A-TT-RH-A-2034-1	7B-TT-960016	
7A-TT-RH-A-1023-1	7A-TT-RH-A-2011-1	7A-TT-RH-A-2035-1	7B-TT-960017	
7A-TT-RH-A-1025-1	7A-TT-RH-A-2012-1	7A-TT-RH-A-2036-1	7B-TT-960018	
7A-TT-RH-A-1029-1	7A-TT-RH-A-2013-1	7A-TT-RH-A-2037-1	7B-TT-960019	
7A-TT-RH-A-1032-1	7A-TT-RH-A-2014-1	7A-TT-RH-A-2038-1	7B-TT-960028	
7A-TT-RH-A-1034-1	7A-TT-RH-A-2015-1	7A-TT-RH-A-2039-1	7B-TT-RH-B1004-001	
7A-TT-RH-A-1037-1	7A-TT-RH-A-2016-1	7A-TT-RH-A-2040-1	7B-TT-RH-B1009-001	
7A-TT-RH-A-1038-1	7-TT-RH-A-2017-1	7A-TT-RH-A-2041-1	7B-TT-RH-B1012-001	
7A-TT-RH-A-1039-1	7A-TT-RH-A-2022-1	7A-TT-RH-A-2042-1		
7A-TT-RH-A-1040-1	7A-TT-RH-A-2023-1	7A-TT-RH-A-2044-1		
7A-TT-RH-A-1062-1	7A-TT-RH-A-2024-1	7A-TT-RH-A-2046-1		
7A-TT-RH-A-2001-1	7A-TT-RH-A-2025-1	7A-TT-RH-A-2049-1		

ITEM ITEM	DESCRIÇÃO DESCRIPTION	MATERIAL MATERIAL	DIMENSÃO DIMENSION	UNID. UNIT	QTD QTY	TOTAL TOTAL
10						
9						
8						
7						
6						
5						
4						
3	PRENSA CABO A PROVA DE TEMPO, P/ CABO C/ Ø ext. 6 a 12mm. CABLE PRESS PROOF OF TIME, P/ CABLE C/ Ø ext. 6 to 12mm.	POLIAMIDA POLYAMIDE	3/4" NPT	pcs PIECE	1	76
2	LUVA PARA ELETRODUTO SEMI-PESADO, GALVANIZ. ROSCA NPT. GLOVE FOR SEMI-HEAVY DUCT, GALVANIZ. NPT THREAD.	A.C. CS	3/4" NPT	pcs PIECE	1	76
1	PRENSA CABO A PROVA DE TEMPO, P/ CABO C/ Ø ext. 6 a 12mm. CABLE PRESS PROOF OF TIME, P/ CABLE C/ Ø ext. 6 to 12mm.	POLIAMIDA POLYAMIDE	1/2"NPT	pcs PIECE	1	76

TESSLER engenharia | ips | Takeda | Hemobrás Empresa brasileira de hemoderivados e biotecnologia

DOC NR: 569-DB07-AIC-220-003

CLIENT NR: 07-I-0-8-03

DRAWING TITLE:
DRUG PRODUCT
BMS - INSTRUMENT TYPICAL INSTALLATION

SHEET: 25 OF 27

REV: 1

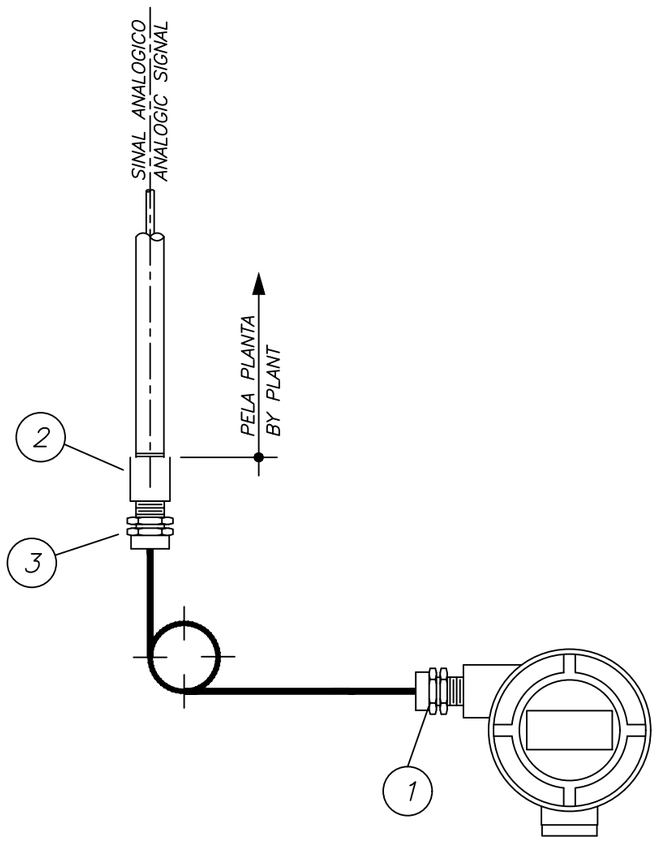

TIPICO ELÉTRICO
ELECTRIC TYPICAL

APPLICATION: TRANSMISSOR 2 FIOS / TRANSMITTER 2-WIRE

TAG. Nº	TAG. Nº	TAG. Nº	TAG. Nº	TAG. Nº
PT-AHU-7A-2-001	PT-AHU-7B-5-002			
PT-AHU-7A-2-002	PT-AHU-7B-6-001			
PT-AHU-7A-3-001	PT-AHU-7B-6-002			
PT-AHU-7A-3-002	PT-AHU-7B-7-001			
PT-AHU-7A-4-001	PT-AHU-7B-7-002			
PT-AHU-7A-4-002	PT-AHU-7B-8-001			
PT-AHU-7A-5-001	PT-AHU-7B-8-002			
PT-AHU-7A-5-002	PT-AHU-7B-9-001			
PT-AHU-7A-6-001	PT-AHU-7B-9-002			
PT-AHU-7A-6-002				
PT-DOAS-7A-1-001				
PT-AHU-7B-1-001				
PT-AHU-7B-1-002				
PT-AHU-7B-2-001				
PT-AHU-7B-2-002				
PT-AHU-7B-3-001				
PT-AHU-7B-3-002				
PT-AHU-7B-4-001				
PT-AHU-7B-4-002				
PT-AHU-7B-5-001				

ITEM ITEM	DESCRIÇÃO DESCRIPTION	MATERIAL MATERIAL	DIMENSÃO DIMENSION	UNID. UNIT	QTD QTY	TOTAL TOTAL
10						
9						
8						
7						
6						
5						
4						
3	PRENSA CABO A PROVA DE TEMPO, P/ CABO C/ Ø ext. 6 a 12mm. CABLE PRESS PROOF OF TIME, P/ CABLE C/ Ø ext. 6 to 12mm.	POLIAMIDA POLYAMIDE	3/4" NPT	pcs PIECE	1	81
2	LUVA PARA ELETRODUTO SEMI-PESADO, GALVANIZ. ROSCA NPT. GLOVE FOR SEMI-HEAVY DUCT, GALVANIZ. NPT THREAD.	A.C. CS	3/4" NPT	pcs PIECE	1	81
1	PRENSA CABO A PROVA DE TEMPO, P/ CABO C/ Ø ext. 6 a 12mm. CABLE PRESS PROOF OF TIME, P/ CABLE C/ Ø ext. 6 to 12mm.	POLIAMIDA POLYAMIDE	1/2"NPT	pcs PIECE	1	81

TESSLER engenharia | ips | Takeda | Hemobrás Empresa brasileira de hemoderivados e biotecnologia

DOC NR: 569-DB07-AIC-220-003

CLIENT NR: 07-I-0-8-03

DRAWING TITLE:
DRUG PRODUCT
BMS - INSTRUMENT TYPICAL INSTALLATION

SHEET: 26 OF 27

REV: 1

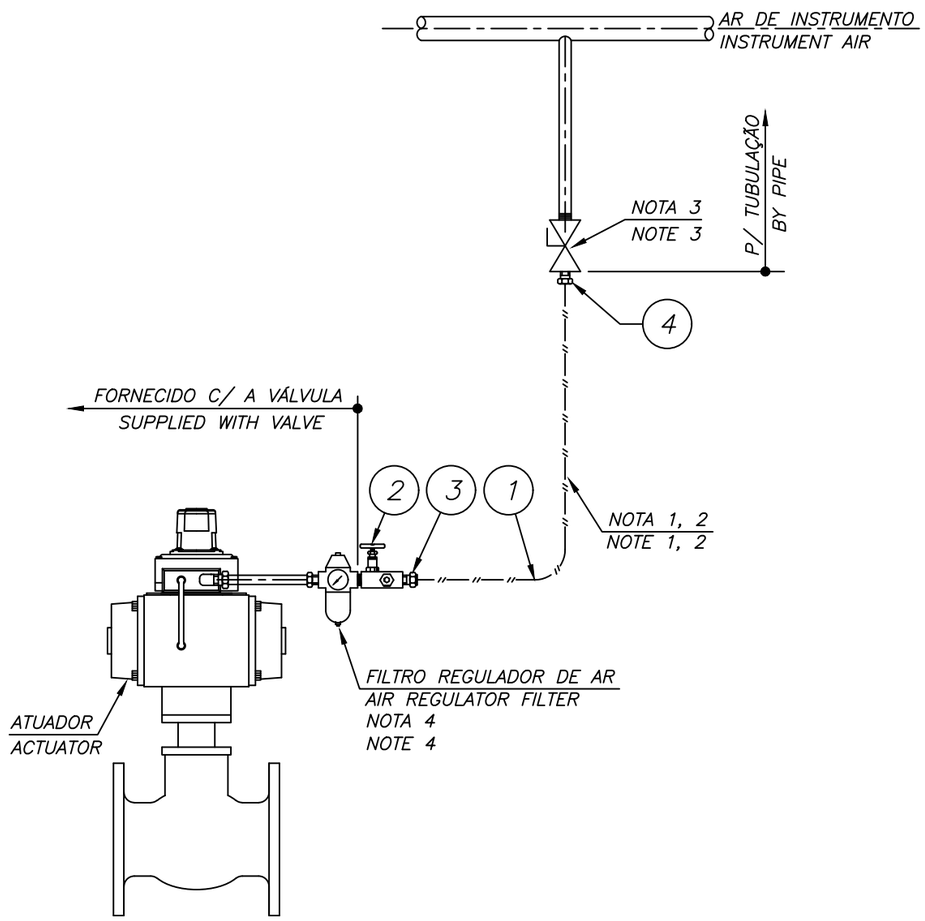

TIPICO DE INSTALAÇÃO PNEUMÁTICO
TYPICAL PNEUMATIC INSTALLATION

APPLICATION: VÁLVULA CONTROLE OU ON OFF / VALVE CONTROL OR ON OFF

TAG. Nº	TAG. Nº	TAG. Nº	TAG. Nº	TAG. Nº
~~7A-XV-940081~~				
7A-XV-940083				
7A-XV-940085				
7B-LV-980005				
7B-PV-790212A				
7B-PV-790212B				
7B-TV-070001				
7B-XV-940031				
~~7B-XV-940033~~				

ITEM ITEM	DESCRIÇÃO DESCRIPTION	MATERIAL MATERIAL	DIMENSÃO DIMENSION	UNID. UNIT	QTD QTY	TOTAL TOTAL
10						
9						
8						
7						
6						
5						
4	CONECTOR MACHO RETO COMPRESSÃO, ASTM A182 Gr F304, DUPLA ANILHA, EXTREM. OD x NPT STRAIGHT CONNECTOR MALE COMPRESSION, ASTM A182 Gr F304, DOUBLE WASHER, EXTREMITY OD x NPT	AÇO INOX SS	6mm x 1/2"	1	pcs PIECE	7
3	CONECTOR MACHO RETO COMPRESSÃO, ASTM A182 Gr F304, DUPLA ANILHA, EXTREM. OD x NPT STRAIGHT CONNECTOR MALE COMPRESSION, ASTM A182 Gr F304, DOUBLE WASHER, EXTREMITY OD x NPT	AÇO INOX SS	6mm x 1/4"	1	pcs PIECE	7
2	VÁLVULA ESFERA, ASTM A182 GR 316 - 3000#, EXTREMIDADE. MACHO/FÊMEA VALVE BALL, ASTM A182 GR 316 - 3000#, END. MALE/FEMALE	AÇO INOX SS	1/4"NPT	1	pcs PIECE	7
1	TUBING, AI ASTM A269 Gr TP304, SC, RECOZIDO, ASME B31.3, 0,89 mm ESPES. OD TUBING OD, AI ASTM A269 Gr TP316, SC, RECOOKED, ASME B31.3, 0.89 mm THICKNESS.	AÇO INOX SS	6mm	2	m m	14

1 – QUANTIDADE ESTIMADA A SER CONFIRMADA PELO CAMPO
1 – ESTIMATED QUANTITY TO BE CONFIRMED BY THE FIELD

2 – O TUBO FLEXÍVEL DEVE SER PROTEGIDO POR PERFILADOS, ELETROCALHAS E ELETRODUTOS.
2 – THE FLEXIBLE TUBE MUST BE PROTECTED BY PROFILERS, ELECTROGUTTERS AND ELECTRODUCTS.

3 – A VÁLVULA DE BLOQUEIO DEVERÁ SER INSTALADA A UM RAIO DE ATÉ 2 METROS DA VÁLVULA DE CONTROLE/ON-OFF.
3 – THE LOCK VALVE MUST BE INSTALLED WITHIN A RADIUS OF UP TO 2 METERS OF THE CONTROL/ON-OFF VALVE.

4 – O FILTRO REGULADOR DE AR DEVE SER SUPORTADO NA PRÓPRIA VÁLVULA/ATUADOR.
4 – AIR REGULATOR FILTER MUST BE SUPPORTED ON THE VALVE/ACTUATOR.

TESSLER engenharia | ips | Takeda | Hemobrás

DOC NR: 569-DB07-AIC-220-003

CLIENT NR: 07-I-0-8-03

DRAWING TITLE:
DRUG PRODUCT
BMS - INSTRUMENT TYPICAL INSTALLATION

SHEET: 27 OF 27

REV: 1