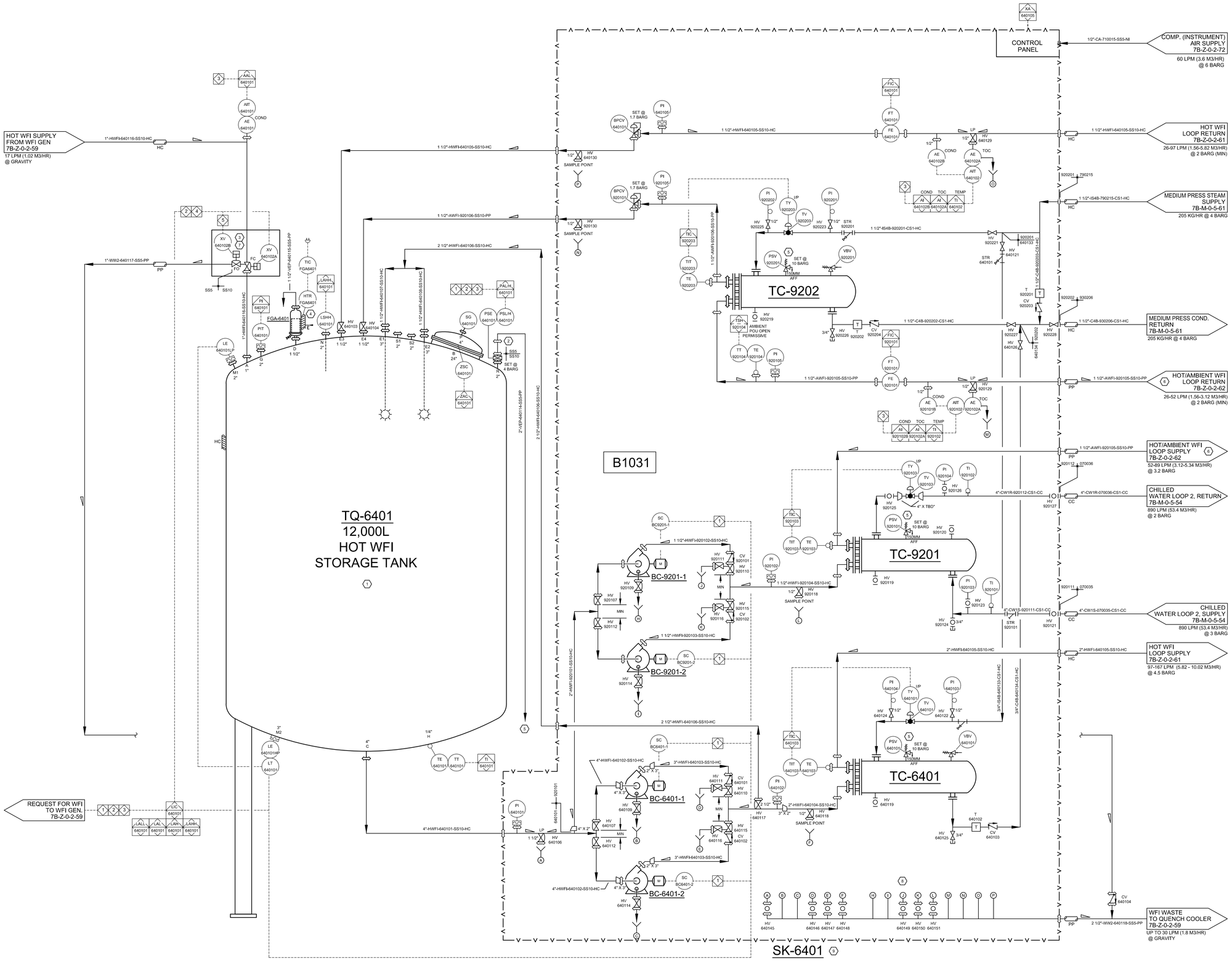

GENERAL NOTES:

1. ALL COMPONENT & EQUIPMENT NUMBERS ARE PRECEDED BY "7B" TO REPRESENT THE BULK DRUG SUBSTANCE (BDS) BUILDING.
2. ALL AUTOMATIC VALVES FAIL CLOSED (F.C.) UNLESS NOTED FAIL OPEN (F.O.).
3. ALL PLC/COMPUTER CONNECTIONS ARE WITHIN THE PCS UNLESS OTHERWISE NOTED.
4. LAST LINE NUMBER:
   REFER TO P&ID 7B-Z-0-2-61 FOR 6401 DETAILS.
   REFER TO P&ID 7B-Z-0-2-62 FOR 9201 DETAILS.
   920203
5. LINE NUMBER NOT USED:
   REFER TO P&ID 7B-Z-0-2-61 FOR 6401 DETAILS.
   REFER TO P&ID 7B-Z-0-2-62 FOR 9201 DETAILS.
   NONE FOR 9202.
6. LAST AUTO VALVE NUMBER:
   REFER TO P&ID 7B-Z-0-2-61 FOR 6401 DETAILS.
   REFER TO P&ID 7B-Z-0-2-62 FOR 9201 DETAILS.
   NONE FOR 9202.
7. AUTO VALVE NUMBERS NOT USED:
   REFER TO P&ID 7B-Z-0-2-61 FOR 6401 DETAILS.
   REFER TO P&ID 7B-Z-0-2-62 FOR 9201 DETAILS.
   NONE FOR 9202.
8. LAST MANUAL VALVE NUMBER:
   REFER TO P&ID 7B-Z-0-2-61 FOR 6401 DETAILS.
   REFER TO P&ID 7B-Z-0-2-62 FOR 9201 DETAILS.
   HV-920220
9. MANUAL VALVE NUMBERS NOT USED:
   REFER TO P&ID 7B-Z-0-2-61 FOR 6401 DETAILS.
   REFER TO P&ID 7B-Z-0-2-62 FOR 9201 DETAILS.
   HV-920201 - 18, 20

SHEET NOTES

1. ALL TANK MOUNTED INSTRUMENTS TO BE CLOSE-COUPLED.
2. SPOOL PIECE FOR EASY RUPTURE DISC REPLACEMENT
3. WFI GENERATION SKID VENDOR TO PROVIDE WFI STORAGE TANK SUPPLY VALVE.
4. ON THE VENT FILTER, PROVIDE AND INSTALL A MKS SERIES "A8" 240VAC ELECTRIC FILTER HOUSING HEATER WITH TEMPERATURE CONTROLLER.
5. ROUTE LINE 150 MM ABOVE FINISHED FLOOR.
6. WFI LOOP NORMALLY OPERATES IN A HOT CONDITION, BUT WHEN A USER REQUESTS AMBIENT WFI THE COOLER ON THE DISTRIBUTION SKID INSTANTANEOUSLY COOLS THE LOOP.
7. DIVERT VALVE (XV-640102B) SHOULD TRIGGER AN ALARM WHEN ACTIVE FOR MORE THAN 1 MINUTE.
8. VENDOR TO COMBINE FUNNEL DRAIN POINTS AS MUCH AS REASONABLE.
9. LOCATE VALVES AND REGULATORS AT OPERATOR LEVEL FOR ERGONOMIC ACCESS (TYPICALLY 1220 MM TO 1525 MM ABOVE FINISHED FLOOR).

INTERLOCKS

- ON BURST DISC INDICATION PAL/H-640101 OR LOW LOW LEVEL LALL-640101 PUMP IS STOPPED (IF RUNNING) AND AUTOMATED START IS DISABLED.
- ON BURST DISC INDICATION PAL/H-640101 OR HIGH HIGH LEVEL LAHH-640101, CLOSE VALVE XV-640102A AND OPEN XV-640102B.
- ENABLE COMMON ALARM OUTPUT ON BURST DISK, TANK LOW LOW LEVEL, HIGH CONDUCTIMTY, HIGH TOC, LOW TEMP.
- DURING FILLING, CLOSE XV-640102A AND OPEN XV-640102B IF CONDUCTIVITY AS INDICATED BY AIT-640101 IS HIGHER THAN SETPOINT.
- IF DIVERT VALVE XV-640102B IS SENDING WFI TO WASTE FOR MORE THAN 20 MINUTES, THE WFI GENERATOR SHUTDOWN SEQUENCE IS INITIATED.

TQ-6401
HWFI STORAGE TANK
TYPE: VERTICAL
CAPACITY: 12,000 L
SIZE: 2134mm ID X 3454mm T.T.
MOC: 316L SS
DP/DT: 4 BARG & F.V. / 175°C

FGA-6401
VENT FILTER
TYPE: IN-LINE, HYDROPHOBIC
FLOW: 130 SLPM @ 0.01 BARD
SIZE:1 RND. X 10" CARTRIDGE
MOC: 316L SS HSG., PTFE ELEM.
RATING: 0.2 µM
ELEC: 220V / 60HZ / 1PH, 2.4A

SK-6401
WFI PUMPING SKID
TYPE: SKIDED SYSTEM
CAP: HOT LOOP-UP TO 167 LPM, AMB LOOP-UP TO 89 LPM
MOC: 316L SS, PAINTED CS FRAME
SIZE: TBD
ELEC:380V / 60HZ / 3PH, 35 KW

BC-6401-1
WFI DISTRIBUTION PUMP
TYPE: SANITARY CENTRIFUGAL
CAPACITY: 175 - 420 LPM @ 4.5 BARG
MANUF./MODEL: TBD
MOC: 316L SS
ELEC: 380V / 60HZ / 3PH, 7 KW

BC-6401-2
WFI DISTRIBUTION PUMP
TYPE: SANITARY CENTRIFUGAL
CAPACITY: 175 - 420 LPM @ 4.5 BARG
MANUF./MODEL: TBD
MOC: 316L SS
ELEC: 380V / 60HZ / 3PH, 7 KW

BC-9201-1
WFI/AMB DISTRIBUTION PUMP
TYPE: SANITARY CENTRIFUGAL
CAPACITY: 26 - 89 LPM @ 3.2 BARG
MANUF./MODEL: TBD
MOC: 316L SS
ELEC: 380V / 60HZ / 3PH, 2 KW

BC-9201-2
WFI/AMB DISTRIBUTION PUMP
TYPE: SANITARY CENTRIFUGAL
CAPACITY: 26 - 89 LPM @ 3.2 BARG
MANUF./MODEL: TBD
MOC: 316L SS
ELEC: 380V / 60HZ / 3PH, 2 KW

TC-6401
WFI SUPPLY HEATER
TYPE: HYGENIC SHELL AND TUBE
CAPACITY: 11.6 KW (HEAT 167 LPM @ 1°C ΔT)
SIZE: TBD
MOC: TUBE, 316L SS/ SHELL, 304L SS
DP/DT: 10 BARG & F.V. / 350°C
AREA: TBD SQ. M

TC-9201
WFI SUPPLY COOLER
TYPE: HYGENIC SHELL AND TUBE
CAPACITY: 371.6 KW (COOL 89 LPM @ 60°C ΔT)
SIZE: TBD
MOC: TUBE, 316L SS/ SHELL, 304L SS
DP/DT: 3 BARG & F.V. / 175°C
AREA: TBD SQ. M

TC-9202
WFI RETURN RE-HEATER
TYPE: HYGENIC SHELL AND TUBE
CAPACITY: 217.4 KW (HEAT 52 LPM @ 60°C ΔT)
SIZE: TBD
MOC: TUBE, 316L SS/ SHELL, 304L SS
DP/DT: 10 BARG & F.V. / 350°C
AREA: TBD SQ. FT.

ISSUED FOR CONSTRUCTION

SEAL
THIS IS NOT A SEALED DOCUMENT
DATE:

ips
Integrated Project Services
Engineering
Design/Build
Compliance
Consulting
721 Arbor Way
Suite 100
BLUE BELL, PA 19422
PHONE: (610) 828-4090
FAX: (610) 828-3656
www.ipsdb.com
IPS Professional Engineers and Architects, LLC.

REVISION	DATE	DESCRIPTION	BY
A	01JUL2020	50% BD ISSUE	DLS
B	28AUG2020	90% BD ISSUE	JJR
C	27NOV2020	DESIGN ISSUE	JJR
D	12FEB2021	30% DD ISSUE	RLD
E	05AUG2021	90% DD ISSUE	RLD
G	02SEP2021	CONSTRUCTION ISSUE	RLD

TESSLER engenharia
R. Dr. Cesário Mota Júnior, 424 - Vila Buarque, São Paulo - SP, 01223-020

REVISION HISTORY

1 REV. 0 - LINE 790214 UPDATED TO 790215.

CONFIDENTIAL
THE INFORMATION CONTAINED HEREIN MAY NOT BE USED OR REPRODUCED IN ANY MANNER WITHOUT WRITTEN PERMISSION OF INTEGRATED PROJECT SERVICES.

CLIENT
Takeda
Hemobrás
Empresa brasileira de hemoderivados e biotecnologia

BURITI EPCMV

DRAWING TITLE
P&I DIAGRAM
DRUG SUBSTANCE
HOT WFI STORAGE TANK
TQ-6401

ENGINEER	ARCHITECT	DESIGNER	IPS PROJECT #
JJR	BJE	RBN	ITD19439.01
DRAWN BY	REVIEWED BY	SCALE	CADD FILE NAME
LG	GJC	NONE	7B-Z-0-2-60

XREF FILE(S)

DRAWING NUMBER
7B-Z-0-2-60

\\ipsdb.com\server\PSP\AProjects\2019\19439\B. DESIGN\B.10 Project Drawings\Process\7B-B0307B-Z-0-2-00.dwg 9-02-21 04:01:13 PM ADurcin