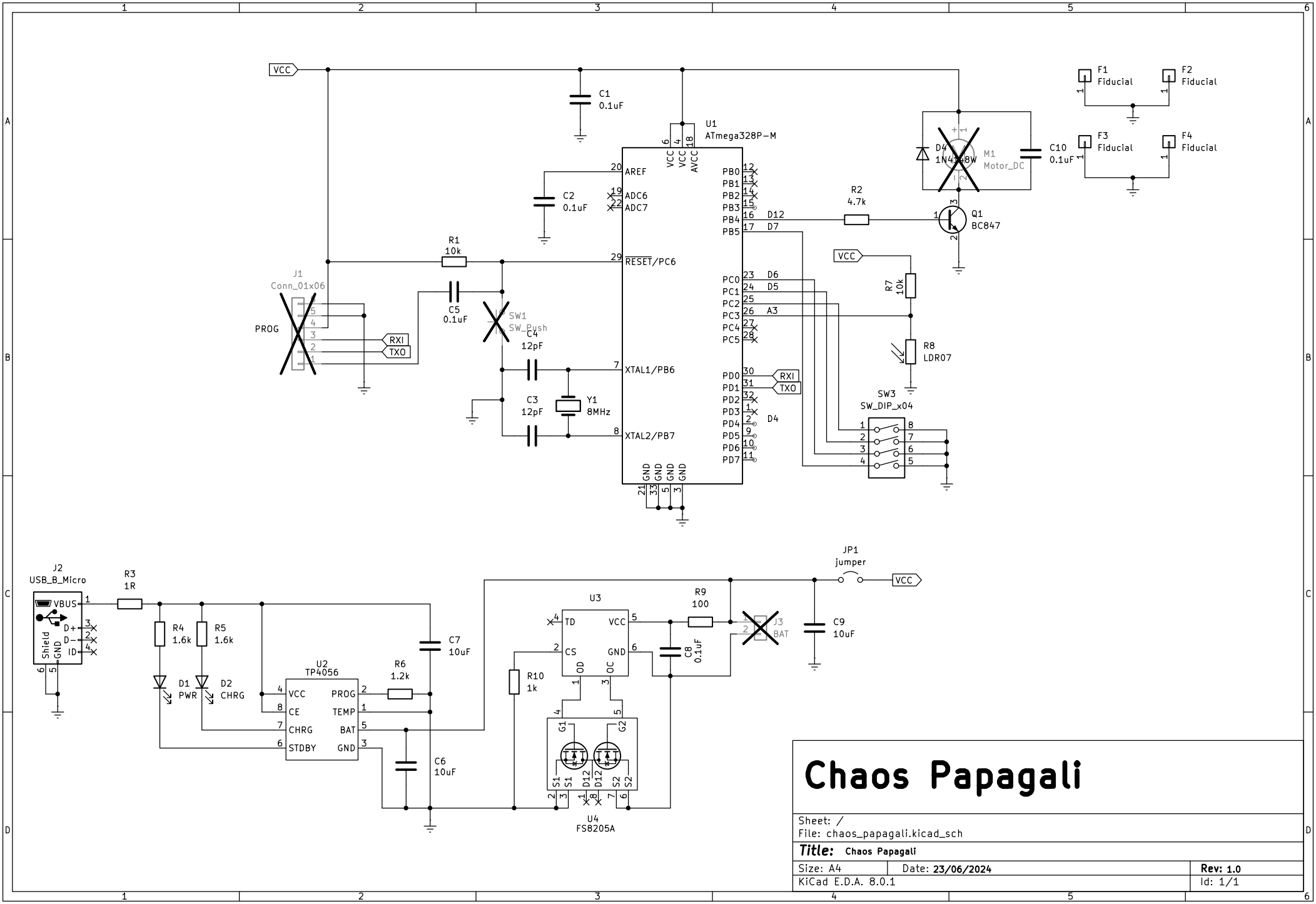

Chaos Papagali

Sheet: /
File: chaos_papagali.kicad_sch

Title: Chaos Papagali

Size: A4	Date: 23/06/2024	Rev: 1.0
KiCad E.D.A. 8.0.1		Id: 1/1