- **Dependable Texas Instruments Quality and Reliability**

description/ordering information

These devices contain six independent inverters.

SN5404 . . . J PACKAGE
SN54LS04, SN54S04 . . . J OR W PACKAGE
SN7404, SN74S04 . . . D, N, OR NS PACKAGE
SN74LS04 . . . D, DB, N, OR NS PACKAGE
(TOP VIEW)

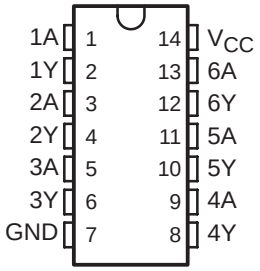

SN5404 . . . W PACKAGE
(TOP VIEW)

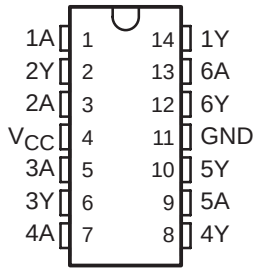

SN54LS04, SN54S04 . . . FK PACKAGE
(TOP VIEW)

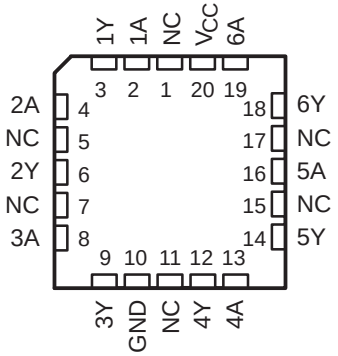

NC − No internal connection

Please be aware that an important notice concerning availability, standard warranty, and use in critical applications of Texas Instruments semiconductor products and disclaimers thereto appears at the end of this data sheet.

PRODUCTION DATA information is current as of publication date. Products conform to specifications per the terms of Texas Instruments standard warranty. Production processing does not necessarily include testing of all parameters.

Copyright © 2004, Texas Instruments Incorporated

On products compliant to MIL-PRF-38535, all parameters are tested unless otherwise noted. On all other products, production processing does not necessarily include testing of all parameters.

ORDERING INFORMATION

T_A	PACKAGE†		ORDERABLE PART NUMBER	TOP-SIDE MARKING
0°C to 70°C	PDIP − N	Tube	SN7404N	SN7404N
		Tube	SN74LS04N	SN74LS04N
		Tube	SN74S04N	SN74S04N
	SOIC − D	Tube	SN7404D	7404
		Tape and reel	SN7404DR	
		Tube	SN74LS04D	LS04
		Tape and reel	SN74LS04DR	
		Tube	SN74S04D	S04
		Tape and reel	SN74S04DR	
	SOP − NS	Tape and reel	SN7404NSR	SN7404
		Tape and reel	SN74LS04NSR	74LS04
		Tape and reel	SN74S04NSR	74S04
	SSOP − DB	Tape and reel	SN74LS04DBR	LS04
−55°C to 125°C	CDIP − J	Tube	SN5404J	SN5404J
		Tube	SNJ5404J	SNJ5404J
		Tube	SN54LS04J	SN54LS04J
		Tube	SN54S04J	SN54S04J
		Tube	SNJ54LS04J	SNJ54LS04J
		Tube	SNJ54S04J	SNJ54S04J
	CFP − W	Tube	SNJ5404W	SNJ5404W
		Tube	SNJ54LS04W	SNJ54LS04W
		Tube	SNJ54S04W	SNJ54S04W
	LCCC − FK	Tube	SNJ54LS04FK	SNJ54LS04FK
		Tube	SNJ54S04FK	SNJ54S04FK

† Package drawings, standard packing quantities, thermal data, symbolization, and PCB design guidelines are available at www.ti.com/sc/package.

FUNCTION TABLE
(each inverter)

INPUT A	OUTPUT Y
H	L
L	H

logic diagram (positive logic)

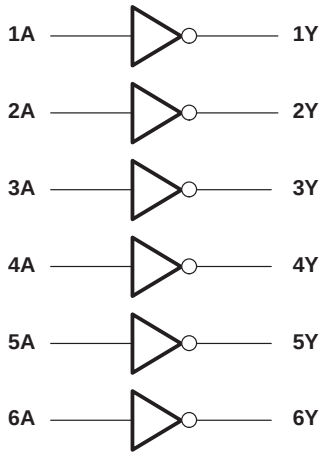

$Y = \overline{A}$

schematics (each gate)

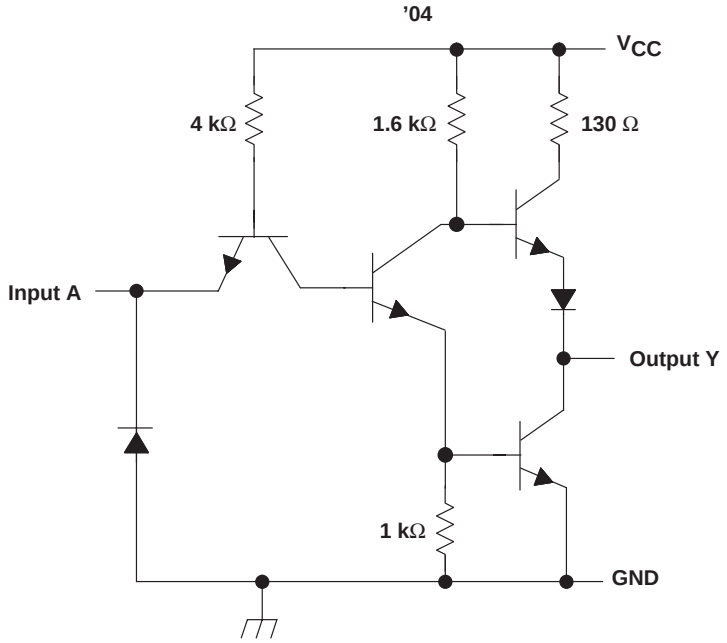

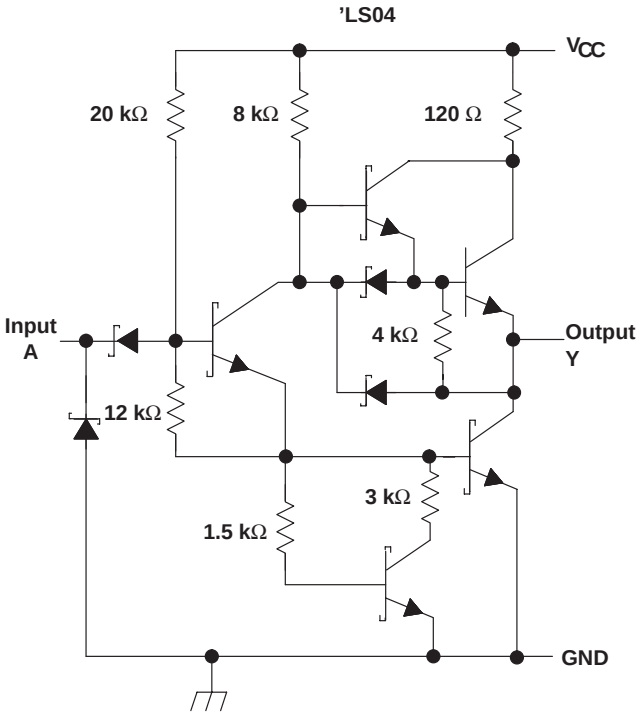

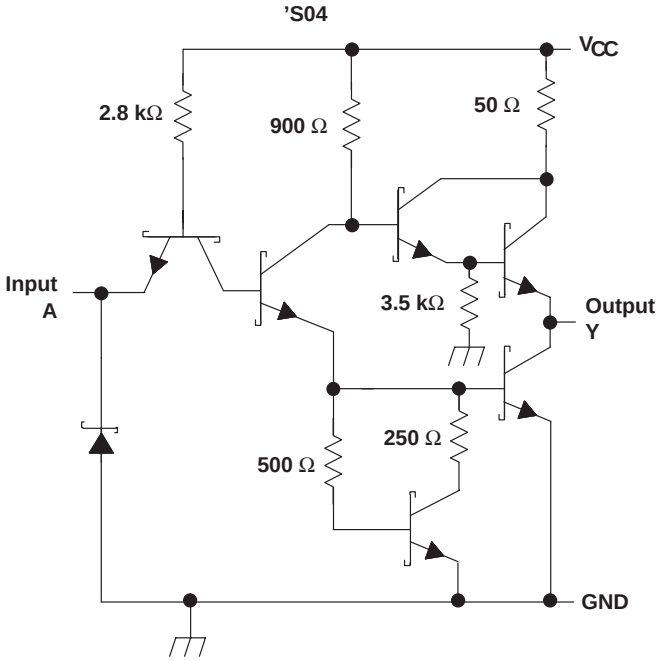

Resistor values shown are nominal.

absolute maximum ratings over operating free-air temperature range (unless otherwise noted)†

Supply voltage, V_{CC} (see Note 1) . . . . . 7 V
Input voltage, V_I: ’04, ’S04 . . . . . 5.5 V
’LS04 . . . . . 7 V
Package thermal impedance, θ_{JA} (see Note 2): D package . . . . . 86°C/W
DB package . . . . . 96°C/W
N package . . . . . 80°C/W
NS package . . . . . 76°C/W
Storage temperature range, T_{stg} . . . . . −65°C to 150°C

† Stresses beyond those listed under “absolute maximum ratings” may cause permanent damage to the device. This are stress ratings only, and functional operation of the device at these or any other conditions beyond those indicated under “recommended operating conditions” is not implied. Exposure to absolute-maximum-rated conditions for extended periods may affect device reliability.

NOTES: 1. Voltage values are with respect to network ground terminal.
2. The package thermal impedance is calculated in accordance with JESD 51-7.

recommended operating conditions (see Note 3)

		SN5404			SN7404			UNIT
		MIN	NOM	MAX	MIN	NOM	MAX	
V_{CC}	Supply voltage	4.5	5	5.5	4.75	5	5.25	V
V_{IH}	High-level input voltage	2			2			V
V_{IL}	Low-level input voltage			0.8			0.8	V
I_{OH}	High-level output current			−0.4			−0.4	mA
I_{OL}	Low-level output current			16			16	mA
T_A	Operating free-air temperature	−55		125	0		70	°C

NOTE 3: All unused inputs of the device must be held at V_{CC} or GND to ensure proper device operation. Refer to the TI application report, *Implications of Slow or Floating CMOS Inputs*, literature number SCBA004.

electrical characteristics over recommended operating free-air temperature range (unless otherwise noted)

PARAMETER	TEST CONDITIONS‡			SN5404			SN7404			UNIT
				MIN	TYP§	MAX	MIN	TYP§	MAX	
V_{IK}	V_{CC} = MIN,	I_I = −12 mA				−1.5			−1.5	V
V_{OH}	V_{CC} = MIN,	V_{IL} = 0.8 V,	I_{OH} = −0.4 mA	2.4	3.4		2.4	3.4		V
V_{OL}	V_{CC} = MIN,	V_{IH} = 2 V,	I_{OL} = 16 mA		0.2	0.4		0.2	0.4	V
I_I	V_{CC} = MAX,	V_I = 5.5 V				1			1	mA
I_{IH}	V_{CC} = MAX,	V_I = 2.4 V				40			40	μA
I_{IL}	V_{CC} = MAX,	V_I = 0.4 V				−1.6			−1.6	mA
I_{OS}¶	V_{CC} = MAX			−20		−55	−18		−55	mA
I_{CCH}	V_{CC} = MAX,	V_I = 0 V			6	12		6	12	mA
I_{CCL}	V_{CC} = MAX,	V_I = 4.5 V			18	33		18	33	mA

‡ For conditions shown as MIN or MAX, use the appropriate value specified under recommended operating conditions.
§ All typical values are at V_{CC} = 5 V, T_A = 25°C.
¶ Not more than one output should be shorted at a time.

switching characteristics, V_{CC} = 5 V, T_A = 25°C (see Figure 1)

PARAMETER	FROM (INPUT)	TO (OUTPUT)	TEST CONDITIONS	SN5404 SN7404 MIN	TYP	MAX	UNIT
t_{PLH}	A	Y	R_L = 400 Ω, C_L = 15 pF		12	22	ns
t_{PHL}					8	15	

recommended operating conditions (see Note 3)

		SN54LS04 MIN	NOM	MAX	SN74LS04 MIN	NOM	MAX	UNIT
V_{CC}	Supply voltage	4.5	5	5.5	4.75	5	5.25	V
V_{IH}	High-level input voltage	2			2			V
V_{IL}	Low-level input voltage			0.7			0.8	V
I_{OH}	High-level output current			−0.4			−0.4	mA
I_{OL}	Low-level output current			4			8	mA
T_A	Operating free-air temperature	−55		125	0		70	°C

NOTE 3: All unused inputs of the device must be held at V_{CC} or GND to ensure proper device operation. Refer to the TI application report, *Implications of Slow or Floating CMOS Inputs*, literature number SCBA004.

electrical characteristics over recommended operating free-air temperature range (unless otherwise noted)

PARAMETER	TEST CONDITIONS†			SN54LS04 MIN	TYP‡	MAX	SN74LS04 MIN	TYP‡	MAX	UNIT
V_{IK}	V_{CC} = MIN,	I_I = −18 mA				−1.5			−1.5	V
V_{OH}	V_{CC} = MIN,	V_{IL} = MAX,	I_{OH} = −0.4 mA	2.5	3.4		2.7	3.4		V
V_{OL}	V_{CC} = MIN,	V_{IH} = 2 V	I_{OL} = 4 mA		0.25	0.4			0.4	V
			I_{OL} = 8 mA					0.25	0.5	
I_I	V_{CC} = MAX,	V_I = 7 V				0.1			0.1	mA
I_{IH}	V_{CC} = MAX,	V_I = 2.7 V				20			20	μA
I_{IL}	V_{CC} = MAX,	V_I = 0.4 V				−0.4			−0.4	mA
I_{OS}§	V_{CC} = MAX			−20		−100	−20		−100	mA
I_{CCH}	V_{CC} = MAX,	V_I = 0 V			1.2	2.4		1.2	2.4	mA
I_{CCL}	V_{CC} = MAX,	V_I = 4.5 V			3.6	6.6		3.6	6.6	mA

† For conditions shown as MIN or MAX, use the appropriate value specified under recommended operating conditions.
‡ All typical values are at V_{CC} = 5 V, T_A = 25°C.
§ Not more than one output should be shorted at a time, and the duration of the short-circuit should not exceed one second.

switching characteristics, V_{CC} = 5 V, T_A = 25°C (see Figure 2)

PARAMETER	FROM (INPUT)	TO (OUTPUT)	TEST CONDITIONS	SN54LS04 SN74LS04 MIN	TYP	MAX	UNIT
t_{PLH}	A	Y	R_L = 2 kΩ, C_L = 15 pF		9	15	ns
t_{PHL}					10	15	

recommended operating conditions (see Note 3)

		SN54S04			SN74S04			UNIT
		MIN	NOM	MAX	MIN	NOM	MAX	
V_{CC}	Supply voltage	4.5	5	5.5	4.75	5	5.25	V
V_{IH}	High-level input voltage	2			2			V
V_{IL}	Low-level input voltage			0.8			0.8	V
I_{OH}	High-level output current			−1			−1	mA
I_{OL}	Low-level output current			20			20	mA
T_A	Operating free-air temperature	−55		125	0		70	°C

NOTE 3: All unused inputs of the device must be held at V_{CC} or GND to ensure proper device operation. Refer to the TI application report, *Implications of Slow or Floating CMOS Inputs*, literature number SCBA004.

electrical characteristics over recommended operating free-air temperature range (unless otherwise noted)

PARAMETER	TEST CONDITIONS†			SN54S04			SN74S04			UNIT
				MIN	TYP‡	MAX	MIN	TYP‡	MAX	
V_{IK}	V_{CC} = MIN,	I_I = −18 mA				−1.2			−1.2	V
V_{OH}	V_{CC} = MIN,	V_{IL} = 0.8 V,	I_{OH} = −1 mA	2.5	3.4		2.7	3.4		V
V_{OL}	V_{CC} = MIN,	V_{IH} = 2 V,	I_{OL} = 20 mA			0.5			0.5	V
I_I	V_{CC} = MAX,	V_I = 5.5 V				1			1	mA
I_{IH}	V_{CC} = MAX,	V_I = 2.7 V				50			50	µA
I_{IL}	V_{CC} = MAX,	V_I = 0.5 V				−2			−2	mA
I_{OS}§	V_{CC} = MAX			−40		−100	−40		−100	mA
I_{CCH}	V_{CC} = MAX,	V_I = 0 V			15	24		15	24	mA
I_{CCL}	V_{CC} = MAX,	V_I = 4.5 V			30	54		30	54	mA

† For conditions shown as MIN or MAX, use the appropriate value specified under recommended operating conditions.
‡ All typical values are at V_{CC} = 5 V, T_A = 25°C.
§ Not more than one output should be shorted at a time, and the duration of the short-circuit should not exceed one second.

switching characteristics, V_{CC} = 5 V, T_A = 25°C (see Figure 1)

PARAMETER	FROM (INPUT)	TO (OUTPUT)	TEST CONDITIONS		SN54S04 SN74S04			UNIT
					MIN	TYP	MAX	
t_{PLH}	A	Y	R_L = 280 Ω,	C_L = 15 pF		3	4.5	ns
t_{PHL}						3	5	
t_{PLH}	A	Y	R_L = 280 Ω,	C_L = 50 pF		4.5		ns
t_{PHL}						5		

PARAMETER MEASUREMENT INFORMATION
SERIES 54/74 AND 54S/74S DEVICES

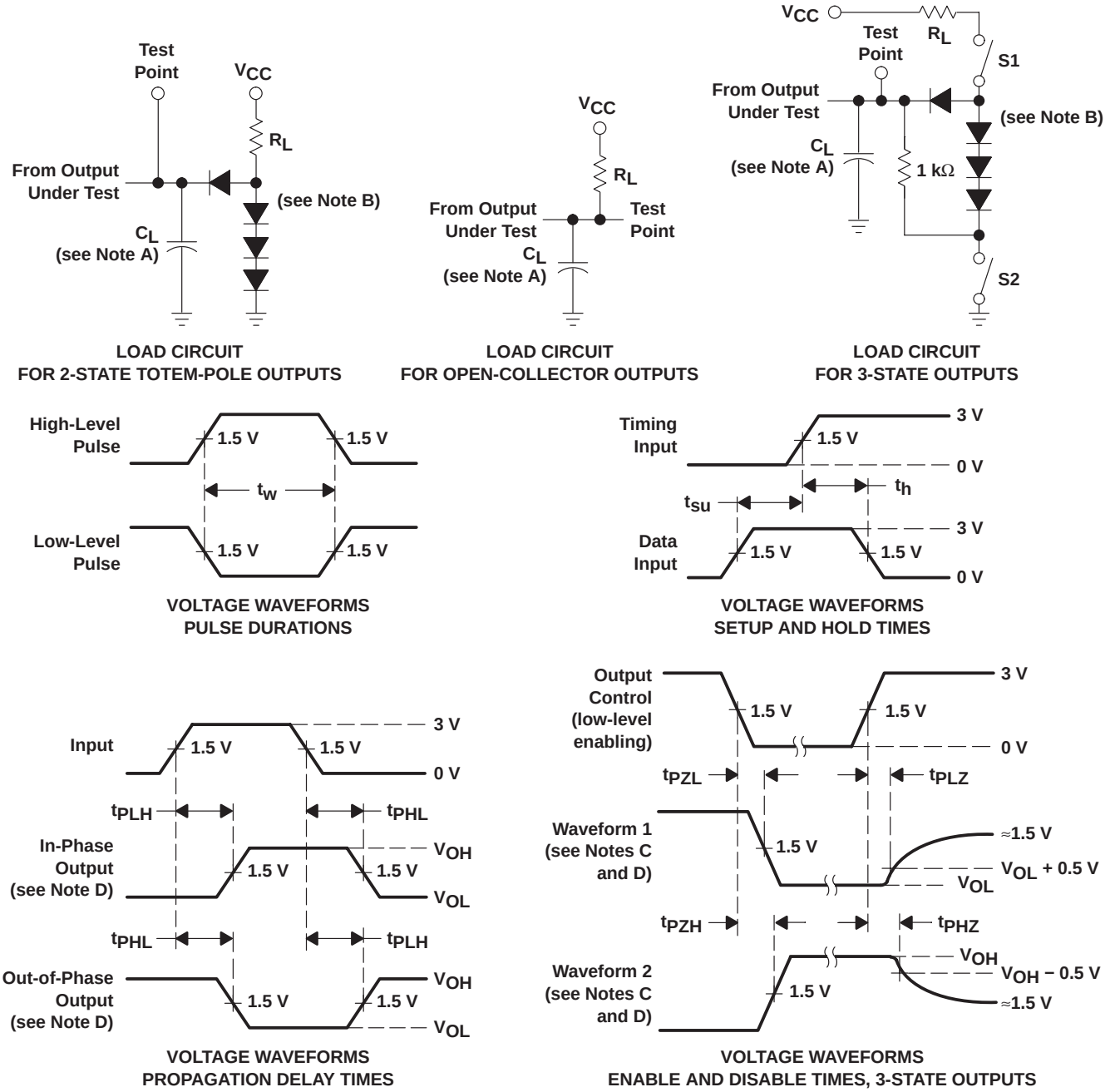

NOTES: A. C_L includes probe and jig capacitance.
B. All diodes are 1N3064 or equivalent.
C. Waveform 1 is for an output with internal conditions such that the output is low, except when disabled by the output control. Waveform 2 is for an output with internal conditions such that the output is high, except when disabled by the output control.
D. S1 and S2 are closed for t_{PLH}, t_{PHL}, t_{PHZ}, and t_{PLZ}; S1 is open and S2 is closed for t_{PZH}; S1 is closed and S2 is open for t_{PZL}.
E. All input pulses are supplied by generators having the following characteristics: PRR ≤ 1 MHz, $Z_O \approx 50\ \Omega$; t_r and $t_f \leq 7$ ns for Series 54/74 devices and t_r and $t_f \leq 2.5$ ns for Series 54S/74S devices.
F. The outputs are measured one at a time, with one input transition per measurement.

Figure 1. Load Circuits and Voltage Waveforms

PARAMETER MEASUREMENT INFORMATION
SERIES 54LS/74LS DEVICES

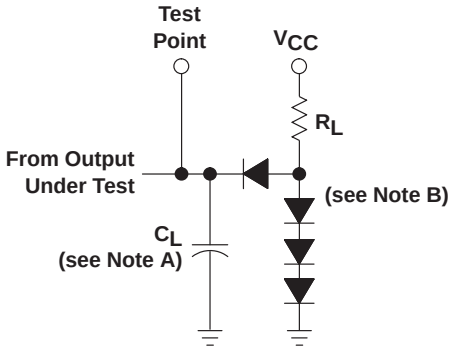

LOAD CIRCUIT
FOR 2-STATE TOTEM-POLE OUTPUTS

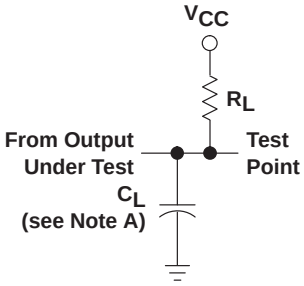

LOAD CIRCUIT
FOR OPEN-COLLECTOR OUTPUTS

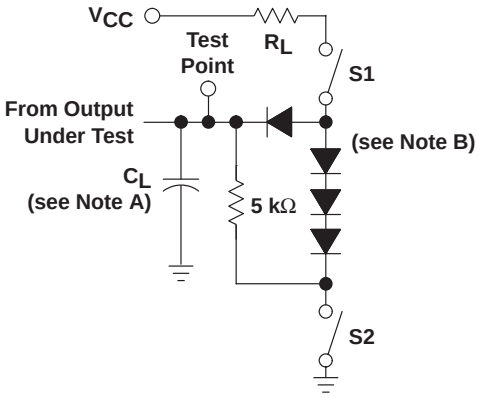

LOAD CIRCUIT
FOR 3-STATE OUTPUTS

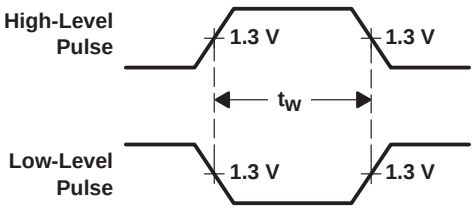

VOLTAGE WAVEFORMS
PULSE DURATIONS

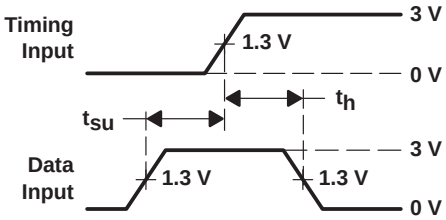

VOLTAGE WAVEFORMS
SETUP AND HOLD TIMES

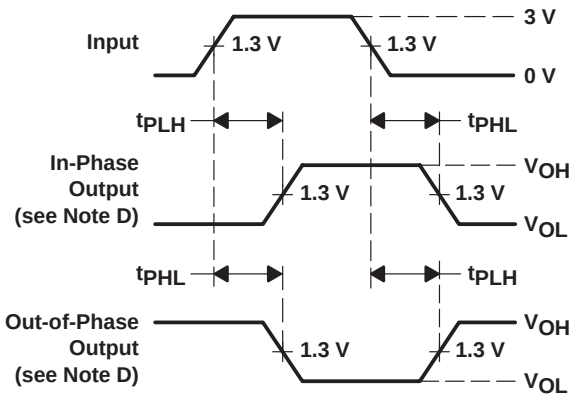

VOLTAGE WAVEFORMS
PROPAGATION DELAY TIMES

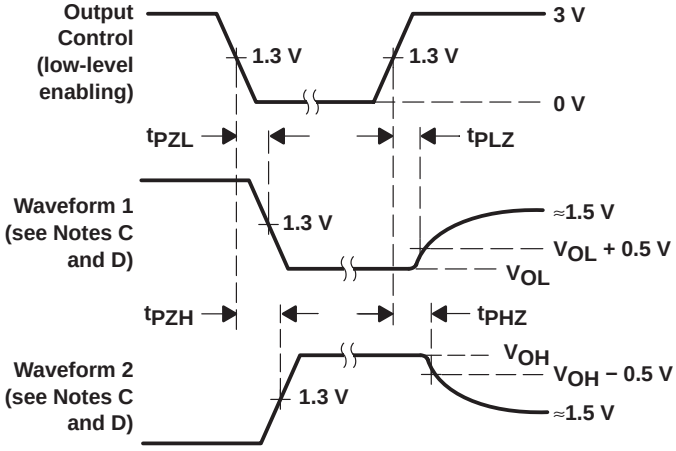

VOLTAGE WAVEFORMS
ENABLE AND DISABLE TIMES, 3-STATE OUTPUTS

NOTES: A. C_L includes probe and jig capacitance.
B. All diodes are 1N3064 or equivalent.
C. Waveform 1 is for an output with internal conditions such that the output is low, except when disabled by the output control. Waveform 2 is for an output with internal conditions such that the output is high, except when disabled by the output control.
D. S1 and S2 are closed for t_{PLH}, t_{PHL}, t_{PHZ}, and t_{PLZ}; S1 is open and S2 is closed for t_{PZH}; S1 is closed and S2 is open for t_{PZL}.
E. Phase relationships between inputs and outputs have been chosen arbitrarily for these examples.
F. All input pulses are supplied by generators having the following characteristics: PRR ≤ 1 MHz, $Z_O \approx 50\ \Omega$, $t_r \leq 1.5$ ns, $t_f \leq 2.6$ ns.
G. The outputs are measured one at a time, with one input transition per measurement.

Figure 2. Load Circuits and Voltage Waveforms

PACKAGING INFORMATION

Orderable part number	Status (1)	Material type (2)	Package | Pins	Package qty | Carrier	RoHS (3)	Lead finish/ Ball material (4)	MSL rating/ Peak reflow (5)	Op temp (°C)	Part marking (6)
JM38510/00105BCA	Active	Production	CDIP (J) | 14	25 | TUBE	No	SNPB	N/A for Pkg Type	-55 to 125	JM38510/ 00105BCA
JM38510/00105BCA.A	Active	Production	CDIP (J) | 14	25 | TUBE	No	SNPB	N/A for Pkg Type	-55 to 125	JM38510/ 00105BCA
JM38510/00105BDA	Active	Production	CFP (W) | 14	25 | TUBE	No	SNPB	N/A for Pkg Type	-55 to 125	JM38510/ 00105BDA
JM38510/00105BDA.A	Active	Production	CFP (W) | 14	25 | TUBE	No	SNPB	N/A for Pkg Type	-55 to 125	JM38510/ 00105BDA
JM38510/07003BCA	Active	Production	CDIP (J) | 14	25 | TUBE	No	SNPB	N/A for Pkg Type	-55 to 125	JM38510/ 07003BCA
JM38510/07003BCA.A	Active	Production	CDIP (J) | 14	25 | TUBE	No	SNPB	N/A for Pkg Type	-55 to 125	JM38510/ 07003BCA
JM38510/07003BDA	Active	Production	CFP (W) | 14	25 | TUBE	No	SNPB	N/A for Pkg Type	-55 to 125	JM38510/ 07003BDA
JM38510/07003BDA.A	Active	Production	CFP (W) | 14	25 | TUBE	No	SNPB	N/A for Pkg Type	-55 to 125	JM38510/ 07003BDA
JM38510/30003B2A	Active	Production	LCCC (FK) | 20	55 | TUBE	No	SNPB	N/A for Pkg Type	-55 to 125	JM38510/ 30003B2A
JM38510/30003B2A.A	Active	Production	LCCC (FK) | 20	55 | TUBE	No	SNPB	N/A for Pkg Type	-55 to 125	JM38510/ 30003B2A
JM38510/30003BCA	Active	Production	CDIP (J) | 14	25 | TUBE	No	SNPB	N/A for Pkg Type	-55 to 125	JM38510/ 30003BCA
JM38510/30003BCA.A	Active	Production	CDIP (J) | 14	25 | TUBE	No	SNPB	N/A for Pkg Type	-55 to 125	JM38510/ 30003BCA
JM38510/30003BDA	Active	Production	CFP (W) | 14	25 | TUBE	No	SNPB	N/A for Pkg Type	-55 to 125	JM38510/ 30003BDA
JM38510/30003BDA.A	Active	Production	CFP (W) | 14	25 | TUBE	No	SNPB	N/A for Pkg Type	-55 to 125	JM38510/ 30003BDA
JM38510/30003SCA	Active	Production	CDIP (J) | 14	25 | TUBE	No	SNPB	N/A for Pkg Type	-55 to 125	JM38510/ 30003SCA
JM38510/30003SCA.A	Active	Production	CDIP (J) | 14	25 | TUBE	No	SNPB	N/A for Pkg Type	-55 to 125	JM38510/ 30003SCA

Orderable part number	Status (1)	Material type (2)	Package | Pins	Package qty | Carrier	RoHS (3)	Lead finish/ Ball material (4)	MSL rating/ Peak reflow (5)	Op temp (°C)	Part marking (6)
M38510/00105BCA	Active	Production	CDIP (J) | 14	25 | TUBE	No	SNPB	N/A for Pkg Type	-55 to 125	JM38510/ 00105BCA
M38510/00105BDA	Active	Production	CFP (W) | 14	25 | TUBE	No	SNPB	N/A for Pkg Type	-55 to 125	JM38510/ 00105BDA
M38510/07003BCA	Active	Production	CDIP (J) | 14	25 | TUBE	No	SNPB	N/A for Pkg Type	-55 to 125	JM38510/ 07003BCA
M38510/07003BDA	Active	Production	CFP (W) | 14	25 | TUBE	No	SNPB	N/A for Pkg Type	-55 to 125	JM38510/ 07003BDA
M38510/30003B2A	Active	Production	LCCC (FK) | 20	55 | TUBE	No	SNPB	N/A for Pkg Type	-55 to 125	JM38510/ 30003B2A
M38510/30003BCA	Active	Production	CDIP (J) | 14	25 | TUBE	No	SNPB	N/A for Pkg Type	-55 to 125	JM38510/ 30003BCA
M38510/30003BDA	Active	Production	CFP (W) | 14	25 | TUBE	No	SNPB	N/A for Pkg Type	-55 to 125	JM38510/ 30003BDA
M38510/30003SCA	Active	Production	CDIP (J) | 14	25 | TUBE	No	SNPB	N/A for Pkg Type	-55 to 125	JM38510/ 30003SCA
SN5404J	Active	Production	CDIP (J) | 14	25 | TUBE	No	SNPB	N/A for Pkg Type	-55 to 125	SN5404J
SN5404J.A	Active	Production	CDIP (J) | 14	25 | TUBE	No	SNPB	N/A for Pkg Type	-55 to 125	SN5404J
SN54LS04J	Active	Production	CDIP (J) | 14	25 | TUBE	No	SNPB	N/A for Pkg Type	-55 to 125	SN54LS04J
SN54LS04J.A	Active	Production	CDIP (J) | 14	25 | TUBE	No	SNPB	N/A for Pkg Type	-55 to 125	SN54LS04J
SN54S04J	Active	Production	CDIP (J) | 14	25 | TUBE	No	SNPB	N/A for Pkg Type	-55 to 125	SN54S04J
SN54S04J.A	Active	Production	CDIP (J) | 14	25 | TUBE	No	SNPB	N/A for Pkg Type	-55 to 125	SN54S04J
SN7404D	Obsolete	Production	SOIC (D) | 14	-	-	Call TI	Call TI	0 to 70	7404
SN7404DR	Active	Production	SOIC (D) | 14	2500 | LARGE T&R	Yes	NIPDAU	Level-1-260C-UNLIM	0 to 70	7404
SN7404DR.A	Active	Production	SOIC (D) | 14	2500 | LARGE T&R	Yes	NIPDAU	Level-1-260C-UNLIM	0 to 70	7404
SN7404N	Active	Production	PDIP (N) | 14	25 | TUBE	Yes	NIPDAU	N/A for Pkg Type	0 to 70	SN7404N
SN7404N.A	Active	Production	PDIP (N) | 14	25 | TUBE	Yes	NIPDAU	N/A for Pkg Type	0 to 70	SN7404N
SN7404NE4	Active	Production	PDIP (N) | 14	25 | TUBE	Yes	NIPDAU	N/A for Pkg Type	0 to 70	SN7404N
SN74LS04D	Active	Production	SOIC (D) | 14	50 | TUBE	Yes	NIPDAU	Level-1-260C-UNLIM	0 to 70	LS04
SN74LS04D.A	Active	Production	SOIC (D) | 14	50 | TUBE	Yes	NIPDAU	Level-1-260C-UNLIM	0 to 70	LS04
SN74LS04DBR	Active	Production	SSOP (DB) | 14	2000 | LARGE T&R	Yes	NIPDAU	Level-1-260C-UNLIM	-	LS04
SN74LS04DBR.A	Active	Production	SSOP (DB) | 14	2000 | LARGE T&R	Yes	NIPDAU	Level-1-260C-UNLIM	0 to 70	LS04
SN74LS04DG4	Active	Production	SOIC (D) | 14	50 | TUBE	Yes	NIPDAU	Level-1-260C-UNLIM	0 to 70	LS04

Orderable part number	Status (1)	Material type (2)	Package | Pins	Package qty | Carrier	RoHS (3)	Lead finish/ Ball material (4)	MSL rating/ Peak reflow (5)	Op temp (°C)	Part marking (6)
SN74LS04DR	Active	Production	SOIC (D) | 14	2500 | LARGE T&R	Yes	NIPDAU	Level-1-260C-UNLIM	0 to 70	LS04
SN74LS04DR.A	Active	Production	SOIC (D) | 14	2500 | LARGE T&R	Yes	NIPDAU	Level-1-260C-UNLIM	0 to 70	LS04
SN74LS04DRG4	Active	Production	SOIC (D) | 14	2500 | LARGE T&R	Yes	NIPDAU	Level-1-260C-UNLIM	0 to 70	LS04
SN74LS04N	Active	Production	PDIP (N) | 14	25 | TUBE	Yes	NIPDAU	N/A for Pkg Type	0 to 70	SN74LS04N
SN74LS04N.A	Active	Production	PDIP (N) | 14	25 | TUBE	Yes	NIPDAU	N/A for Pkg Type	0 to 70	SN74LS04N
SN74LS04NE4	Active	Production	PDIP (N) | 14	25 | TUBE	Yes	NIPDAU	N/A for Pkg Type	0 to 70	SN74LS04N
SN74LS04NSR	Active	Production	SOP (NS) | 14	2000 | LARGE T&R	Yes	NIPDAU	Level-1-260C-UNLIM	0 to 70	74LS04
SN74LS04NSR.A	Active	Production	SOP (NS) | 14	2000 | LARGE T&R	Yes	NIPDAU	Level-1-260C-UNLIM	0 to 70	74LS04
SN74S04D	Obsolete	Production	SOIC (D) | 14	-	-	Call TI	Call TI	0 to 70	S04
SN74S04DR	Active	Production	SOIC (D) | 14	2500 | LARGE T&R	Yes	NIPDAU	Level-1-260C-UNLIM	0 to 70	S04
SN74S04DR.A	Active	Production	SOIC (D) | 14	2500 | LARGE T&R	Yes	NIPDAU	Level-1-260C-UNLIM	0 to 70	S04
SN74S04N	Active	Production	PDIP (N) | 14	25 | TUBE	Yes	NIPDAU	N/A for Pkg Type	0 to 70	SN74S04N
SN74S04N.A	Active	Production	PDIP (N) | 14	25 | TUBE	Yes	NIPDAU	N/A for Pkg Type	0 to 70	SN74S04N
SN74S04NE4	Active	Production	PDIP (N) | 14	25 | TUBE	Yes	NIPDAU	N/A for Pkg Type	0 to 70	SN74S04N
SN74S04NSR	Active	Production	SOP (NS) | 14	2000 | LARGE T&R	Yes	NIPDAU	Level-1-260C-UNLIM	0 to 70	74S04
SN74S04NSR.A	Active	Production	SOP (NS) | 14	2000 | LARGE T&R	Yes	NIPDAU	Level-1-260C-UNLIM	0 to 70	74S04
SNJ5404J	Active	Production	CDIP (J) | 14	25 | TUBE	No	SNPB	N/A for Pkg Type	-55 to 125	SNJ5404J
SNJ5404J.A	Active	Production	CDIP (J) | 14	25 | TUBE	No	SNPB	N/A for Pkg Type	-55 to 125	SNJ5404J
SNJ5404W	Active	Production	CFP (W) | 14	25 | TUBE	No	SNPB	N/A for Pkg Type	-55 to 125	SNJ5404W
SNJ5404W.A	Active	Production	CFP (W) | 14	25 | TUBE	No	SNPB	N/A for Pkg Type	-55 to 125	SNJ5404W
SNJ54LS04FK	Active	Production	LCCC (FK) | 20	55 | TUBE	No	SNPB	N/A for Pkg Type	-55 to 125	SNJ54LS 04FK
SNJ54LS04FK.A	Active	Production	LCCC (FK) | 20	55 | TUBE	No	SNPB	N/A for Pkg Type	-55 to 125	SNJ54LS 04FK
SNJ54LS04J	Active	Production	CDIP (J) | 14	25 | TUBE	No	SNPB	N/A for Pkg Type	-55 to 125	SNJ54LS04J
SNJ54LS04J.A	Active	Production	CDIP (J) | 14	25 | TUBE	No	SNPB	N/A for Pkg Type	-55 to 125	SNJ54LS04J
SNJ54LS04W	Active	Production	CFP (W) | 14	25 | TUBE	No	SNPB	N/A for Pkg Type	-55 to 125	SNJ54LS04W
SNJ54LS04W.A	Active	Production	CFP (W) | 14	25 | TUBE	No	SNPB	N/A for Pkg Type	-55 to 125	SNJ54LS04W
SNJ54S04FK	Active	Production	LCCC (FK) | 20	55 | TUBE	No	SNPB	N/A for Pkg Type	-55 to 125	SNJ54S 04FK
SNJ54S04FK.A	Active	Production	LCCC (FK) | 20	55 | TUBE	No	SNPB	N/A for Pkg Type	-55 to 125	SNJ54S 04FK

Orderable part number	Status (1)	Material type (2)	Package | Pins	Package qty | Carrier	RoHS (3)	Lead finish/ Ball material (4)	MSL rating/ Peak reflow (5)	Op temp (°C)	Part marking (6)
SNJ54S04J	Active	Production	CDIP (J) | 14	25 | TUBE	No	SNPB	N/A for Pkg Type	-55 to 125	SNJ54S04J
SNJ54S04J.A	Active	Production	CDIP (J) | 14	25 | TUBE	No	SNPB	N/A for Pkg Type	-55 to 125	SNJ54S04J
SNJ54S04W	Active	Production	CFP (W) | 14	25 | TUBE	No	SNPB	N/A for Pkg Type	-55 to 125	SNJ54S04W
SNJ54S04W.A	Active	Production	CFP (W) | 14	25 | TUBE	No	SNPB	N/A for Pkg Type	-55 to 125	SNJ54S04W

(1) **Status:** For more details on status, see our product life cycle.

(2) **Material type:** When designated, preproduction parts are prototypes/experimental devices, and are not yet approved or released for full production. Testing and final process, including without limitation quality assurance, reliability performance testing, and/or process qualification, may not yet be complete, and this item is subject to further changes or possible discontinuation. If available for ordering, purchases will be subject to an additional waiver at checkout, and are intended for early internal evaluation purposes only. These items are sold without warranties of any kind.

(3) **RoHS values:** Yes, No, RoHS Exempt. See the TI RoHS Statement for additional information and value definition.

(4) **Lead finish/Ball material:** Parts may have multiple material finish options. Finish options are separated by a vertical ruled line. Lead finish/Ball material values may wrap to two lines if the finish value exceeds the maximum column width.

(5) **MSL rating/Peak reflow:** The moisture sensitivity level ratings and peak solder (reflow) temperatures. In the event that a part has multiple moisture sensitivity ratings, only the lowest level per JEDEC standards is shown. Refer to the shipping label for the actual reflow temperature that will be used to mount the part to the printed circuit board.

(6) **Part marking:** There may be an additional marking, which relates to the logo, the lot trace code information, or the environmental category of the part.

Multiple part markings will be inside parentheses. Only one part marking contained in parentheses and separated by a "~" will appear on a part. If a line is indented then it is a continuation of the previous line and the two combined represent the entire part marking for that device.

Important Information and Disclaimer: The information provided on this page represents TI's knowledge and belief as of the date that it is provided. TI bases its knowledge and belief on information provided by third parties, and makes no representation or warranty as to the accuracy of such information. Efforts are underway to better integrate information from third parties. TI has taken and continues to take reasonable steps to provide representative and accurate information but may not have conducted destructive testing or chemical analysis on incoming materials and chemicals. TI and TI suppliers consider certain information to be proprietary, and thus CAS numbers and other limited information may not be available for release.

In no event shall TI's liability arising out of such information exceed the total purchase price of the TI part(s) at issue in this document sold by TI to Customer on an annual basis.

OTHER QUALIFIED VERSIONS OF SN5404, SN54LS04, SN54LS04-SP, SN54S04, SN7404, SN74LS04, SN74S04 :

- Catalog : SN7404, SN74LS04, SN54LS04, SN74S04

- Military : SN5404, SN54LS04, SN54S04
- Space : SN54LS04-SP

NOTE: Qualified Version Definitions:

- Catalog - TI's standard catalog product
- Military - QML certified for Military and Defense Applications
- Space - Radiation tolerant, ceramic packaging and qualified for use in Space-based application

TAPE AND REEL INFORMATION

REEL DIMENSIONS

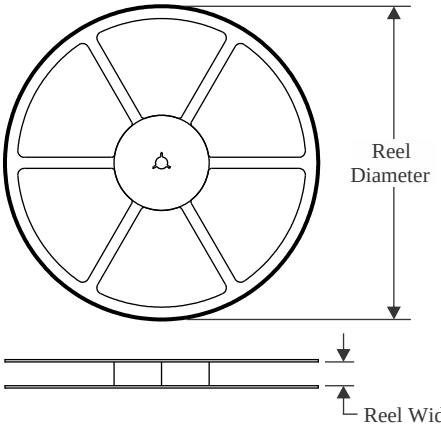

TAPE DIMENSIONS

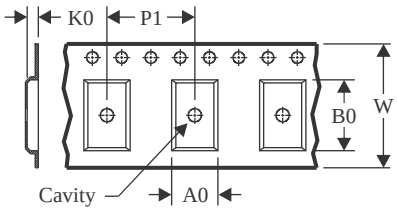

A0	Dimension designed to accommodate the component width
B0	Dimension designed to accommodate the component length
K0	Dimension designed to accommodate the component thickness
W	Overall width of the carrier tape
P1	Pitch between successive cavity centers

QUADRANT ASSIGNMENTS FOR PIN 1 ORIENTATION IN TAPE

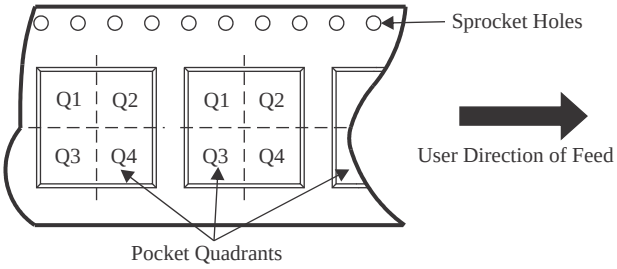

*All dimensions are nominal

Device	Package Type	Package Drawing	Pins	SPQ	Reel Diameter (mm)	Reel Width W1 (mm)	A0 (mm)	B0 (mm)	K0 (mm)	P1 (mm)	W (mm)	Pin1 Quadrant
SN7404DR	SOIC	D	14	2500	330.0	16.4	6.5	9.0	2.1	8.0	16.0	Q1
SN74LS04DBR	SSOP	DB	14	2000	330.0	16.4	8.35	6.6	2.4	12.0	16.0	Q1
SN74LS04DR	SOIC	D	14	2500	330.0	16.4	6.5	9.0	2.1	8.0	16.0	Q1
SN74LS04NSR	SOP	NS	14	2000	330.0	16.4	8.1	10.4	2.5	12.0	16.0	Q1
SN74S04DR	SOIC	D	14	2500	330.0	16.4	6.5	9.0	2.1	8.0	16.0	Q1
SN74S04NSR	SOP	NS	14	2000	330.0	16.4	8.1	10.4	2.5	12.0	16.0	Q1

TAPE AND REEL BOX DIMENSIONS

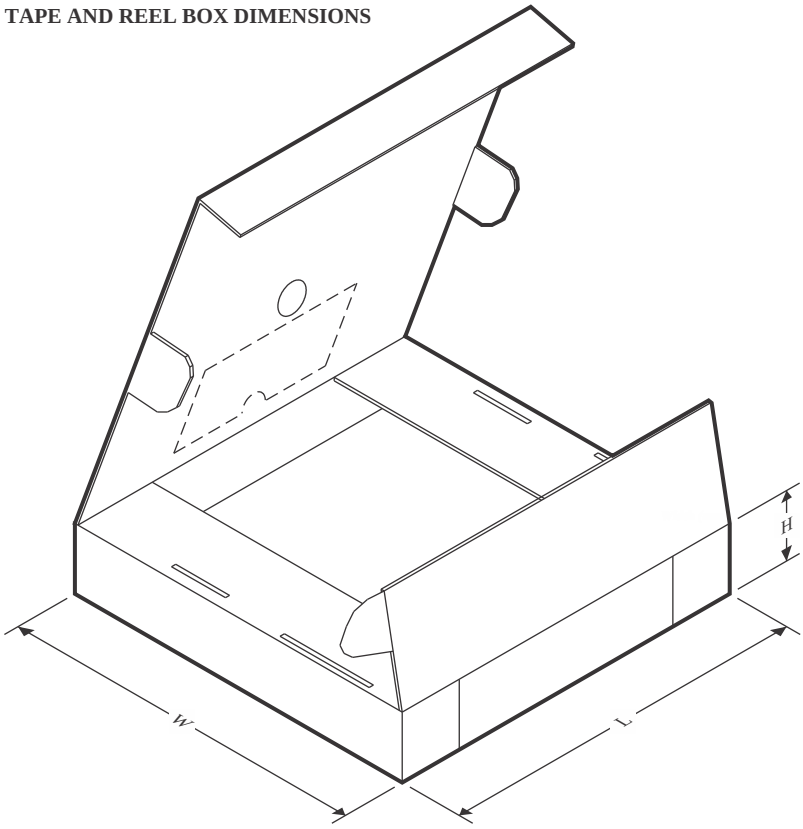

*All dimensions are nominal

Device	Package Type	Package Drawing	Pins	SPQ	Length (mm)	Width (mm)	Height (mm)
SN7404DR	SOIC	D	14	2500	353.0	353.0	32.0
SN74LS04DBR	SSOP	DB	14	2000	353.0	353.0	32.0
SN74LS04DR	SOIC	D	14	2500	353.0	353.0	32.0
SN74LS04NSR	SOP	NS	14	2000	353.0	353.0	32.0
SN74S04DR	SOIC	D	14	2500	353.0	353.0	32.0
SN74S04NSR	SOP	NS	14	2000	353.0	353.0	32.0

TUBE

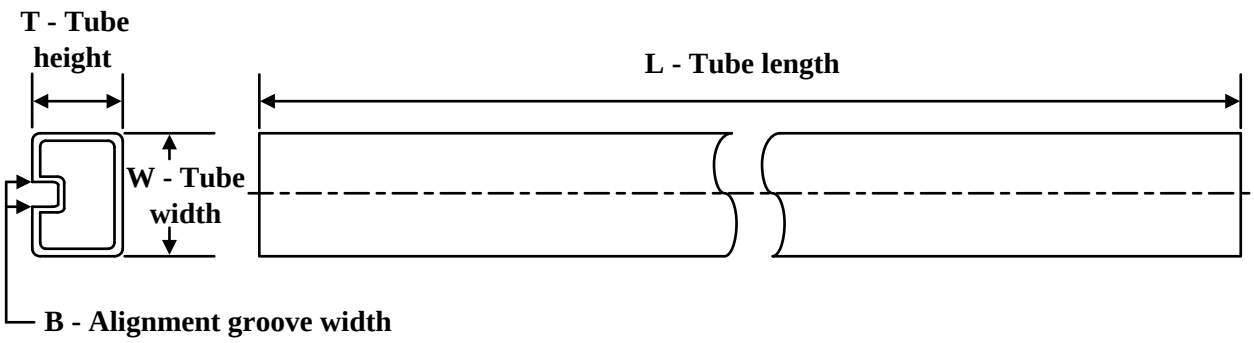

*All dimensions are nominal

Device	Package Name	Package Type	Pins	SPQ	L (mm)	W (mm)	T (µm)	B (mm)
JM38510/00105BDA	W	CFP	14	25	506.98	26.16	6220	NA
JM38510/00105BDA.A	W	CFP	14	25	506.98	26.16	6220	NA
JM38510/07003BDA	W	CFP	14	25	506.98	26.16	6220	NA
JM38510/07003BDA.A	W	CFP	14	25	506.98	26.16	6220	NA
JM38510/30003B2A	FK	LCCC	20	55	506.98	12.06	2030	NA
JM38510/30003B2A.A	FK	LCCC	20	55	506.98	12.06	2030	NA
JM38510/30003BDA	W	CFP	14	25	506.98	26.16	6220	NA
JM38510/30003BDA.A	W	CFP	14	25	506.98	26.16	6220	NA
M38510/00105BDA	W	CFP	14	25	506.98	26.16	6220	NA
M38510/07003BDA	W	CFP	14	25	506.98	26.16	6220	NA
M38510/30003B2A	FK	LCCC	20	55	506.98	12.06	2030	NA
M38510/30003BDA	W	CFP	14	25	506.98	26.16	6220	NA
SN7404N	N	PDIP	14	25	506	13.97	11230	4.32
SN7404N	N	PDIP	14	25	506	13.97	11230	4.32
SN7404N.A	N	PDIP	14	25	506	13.97	11230	4.32
SN7404N.A	N	PDIP	14	25	506	13.97	11230	4.32
SN7404NE4	N	PDIP	14	25	506	13.97	11230	4.32
SN7404NE4	N	PDIP	14	25	506	13.97	11230	4.32
SN74LS04D	D	SOIC	14	50	506.6	8	3940	4.32
SN74LS04D.A	D	SOIC	14	50	506.6	8	3940	4.32
SN74LS04DG4	D	SOIC	14	50	506.6	8	3940	4.32
SN74LS04N	N	PDIP	14	25	506	13.97	11230	4.32
SN74LS04N	N	PDIP	14	25	506	13.97	11230	4.32
SN74LS04N.A	N	PDIP	14	25	506	13.97	11230	4.32
SN74LS04N.A	N	PDIP	14	25	506	13.97	11230	4.32
SN74LS04NE4	N	PDIP	14	25	506	13.97	11230	4.32
SN74LS04NE4	N	PDIP	14	25	506	13.97	11230	4.32
SN74S04N	N	PDIP	14	25	506	13.97	11230	4.32
SN74S04N	N	PDIP	14	25	506	13.97	11230	4.32

Device	Package Name	Package Type	Pins	SPQ	L (mm)	W (mm)	T (µm)	B (mm)
SN74S04N.A	N	PDIP	14	25	506	13.97	11230	4.32
SN74S04N.A	N	PDIP	14	25	506	13.97	11230	4.32
SN74S04NE4	N	PDIP	14	25	506	13.97	11230	4.32
SN74S04NE4	N	PDIP	14	25	506	13.97	11230	4.32
SNJ5404W	W	CFP	14	25	506.98	26.16	6220	NA
SNJ5404W.A	W	CFP	14	25	506.98	26.16	6220	NA
SNJ54LS04FK	FK	LCCC	20	55	506.98	12.06	2030	NA
SNJ54LS04FK.A	FK	LCCC	20	55	506.98	12.06	2030	NA
SNJ54LS04W	W	CFP	14	25	506.98	26.16	6220	NA
SNJ54LS04W.A	W	CFP	14	25	506.98	26.16	6220	NA
SNJ54S04FK	FK	LCCC	20	55	506.98	12.06	2030	NA
SNJ54S04FK.A	FK	LCCC	20	55	506.98	12.06	2030	NA

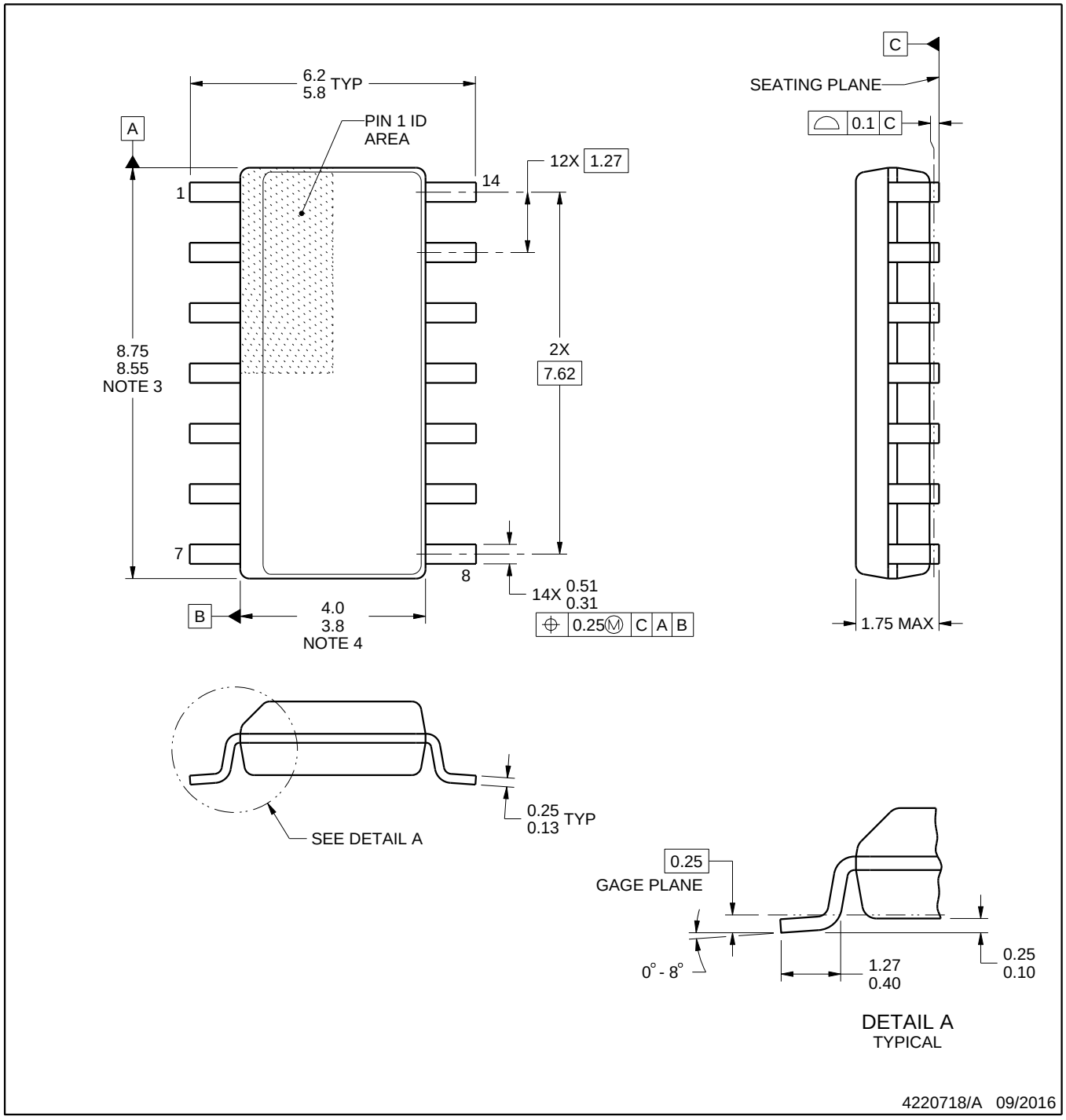

NOTES:

1. All linear dimensions are in millimeters. Dimensions in parenthesis are for reference only. Dimensioning and tolerancing per ASME Y14.5M.
2. This drawing is subject to change without notice.
3. This dimension does not include mold flash, protrusions, or gate burrs. Mold flash, protrusions, or gate burrs shall not exceed 0.15 mm, per side.
4. This dimension does not include interlead flash. Interlead flash shall not exceed 0.43 mm, per side.
5. Reference JEDEC registration MS-012, variation AB.

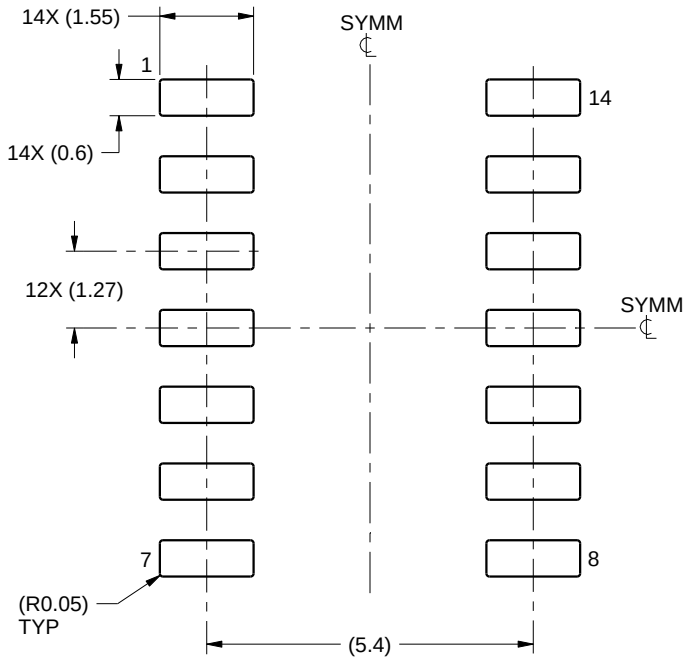

LAND PATTERN EXAMPLE
SCALE:8X

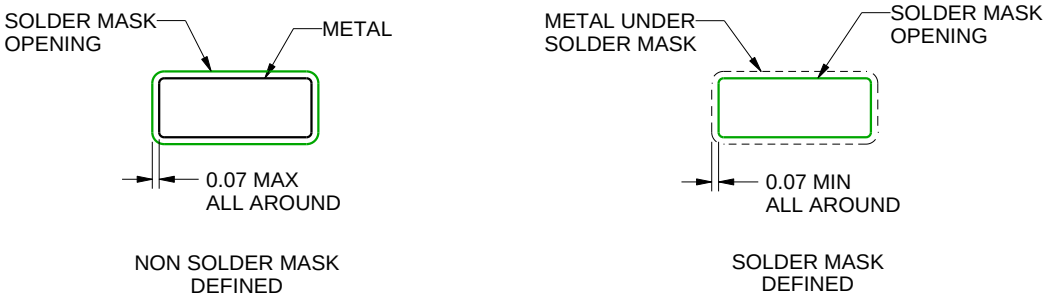

SOLDER MASK DETAILS

4220718/A 09/2016

NOTES: (continued)

6. Publication IPC-7351 may have alternate designs.
7. Solder mask tolerances between and around signal pads can vary based on board fabrication site.

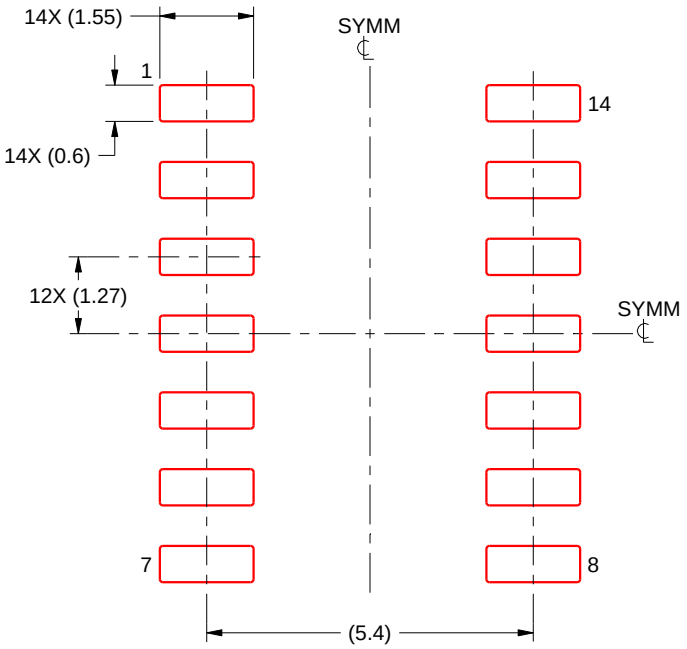

SOLDER PASTE EXAMPLE
BASED ON 0.125 mm THICK STENCIL
SCALE:8X

4220718/A 09/2016

NOTES: (continued)

8. Laser cutting apertures with trapezoidal walls and rounded corners may offer better paste release. IPC-7525 may have alternate design recommendations.
9. Board assembly site may have different recommendations for stencil design.

MECHANICAL DATA

NS (R-PDSO-G)** **PLASTIC SMALL-OUTLINE PACKAGE**

14-PINS SHOWN

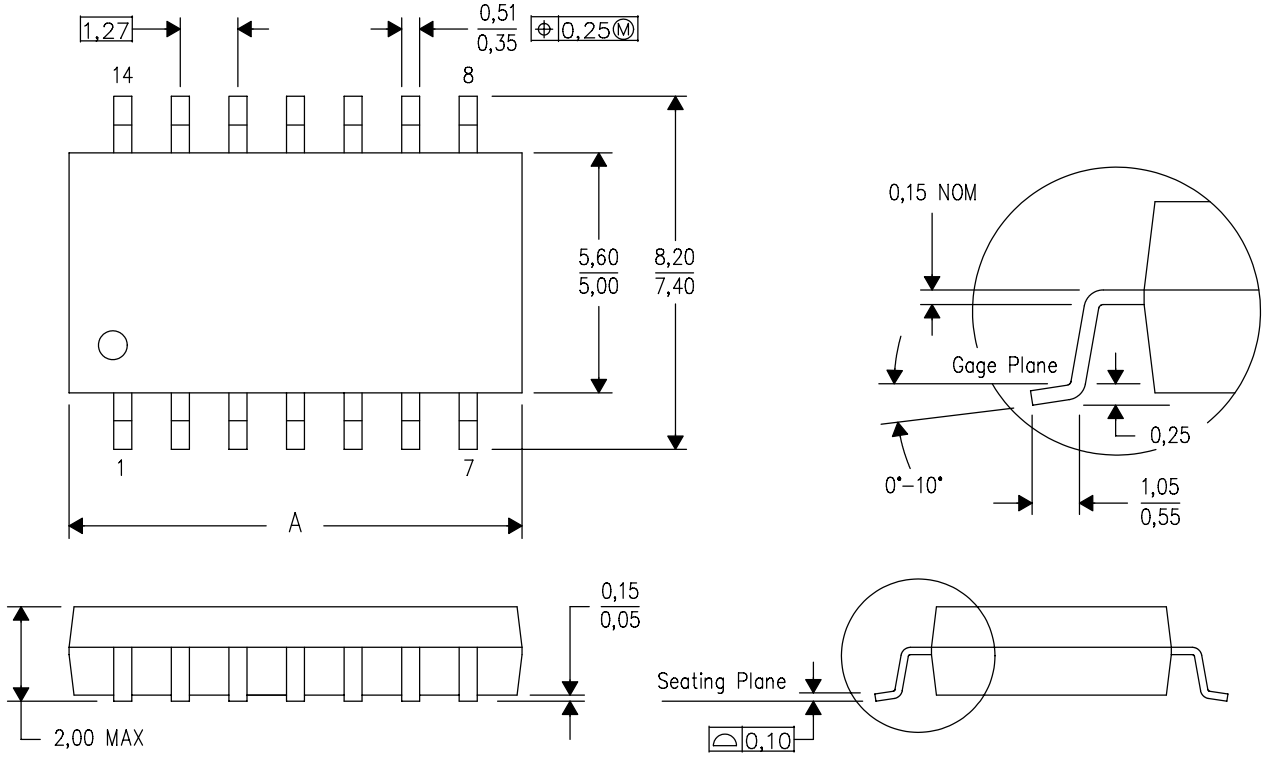

DIM \ PINS **	14	16	20	24
A MAX	10,50	10,50	12,90	15,30
A MIN	9,90	9,90	12,30	14,70

4040062/C 03/03

NOTES:
A. All linear dimensions are in millimeters.
B. This drawing is subject to change without notice.
C. Body dimensions do not include mold flash or protrusion, not to exceed 0,15.

W (R–GDFP–F14) CERAMIC DUAL FLATPACK

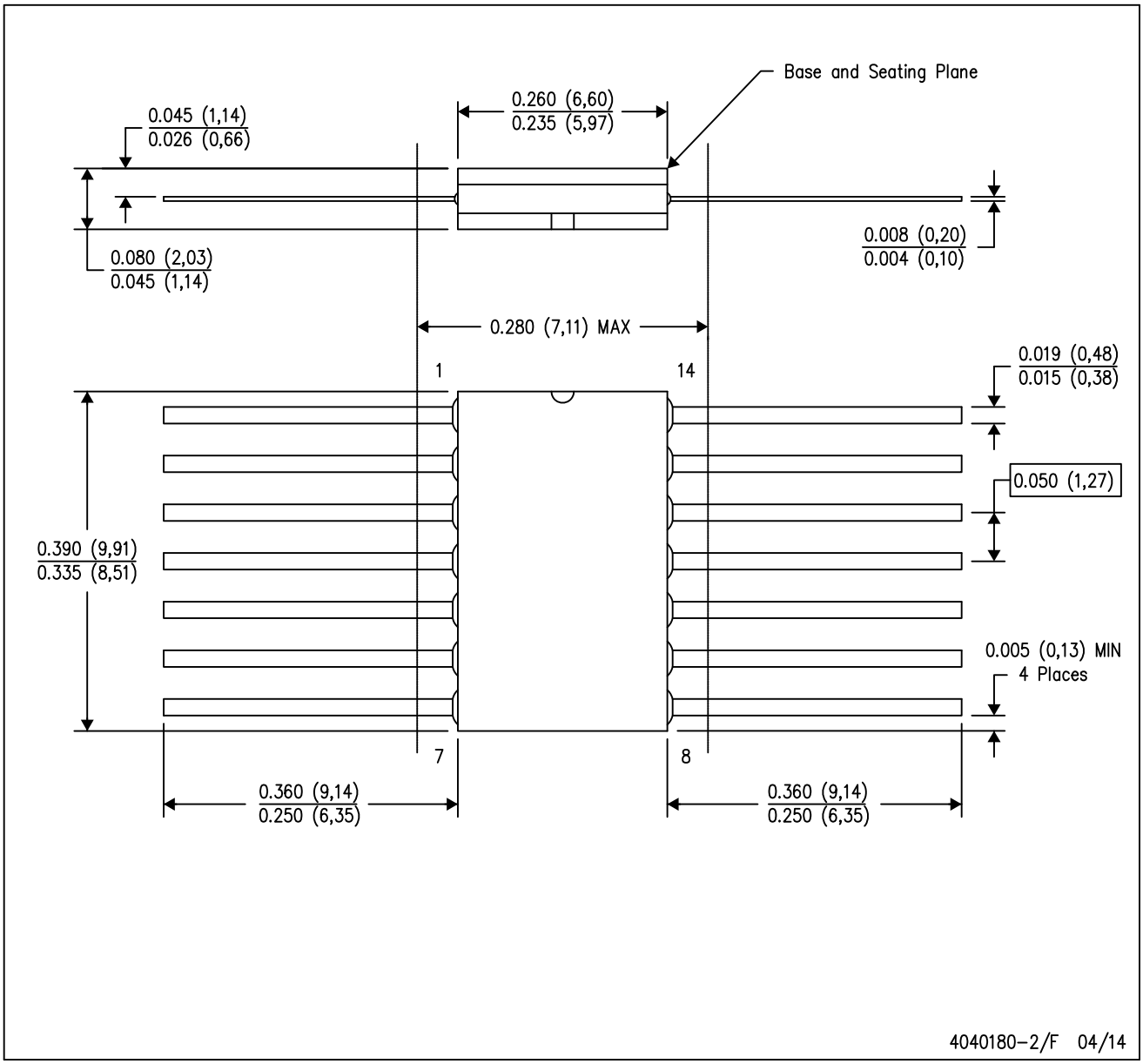

NOTES:
A. All linear dimensions are in inches (millimeters).
B. This drawing is subject to change without notice.
C. This package can be hermetically sealed with a ceramic lid using glass frit.
D. Index point is provided on cap for terminal identification only.
E. Falls within MIL STD 1835 GDFP1–F14

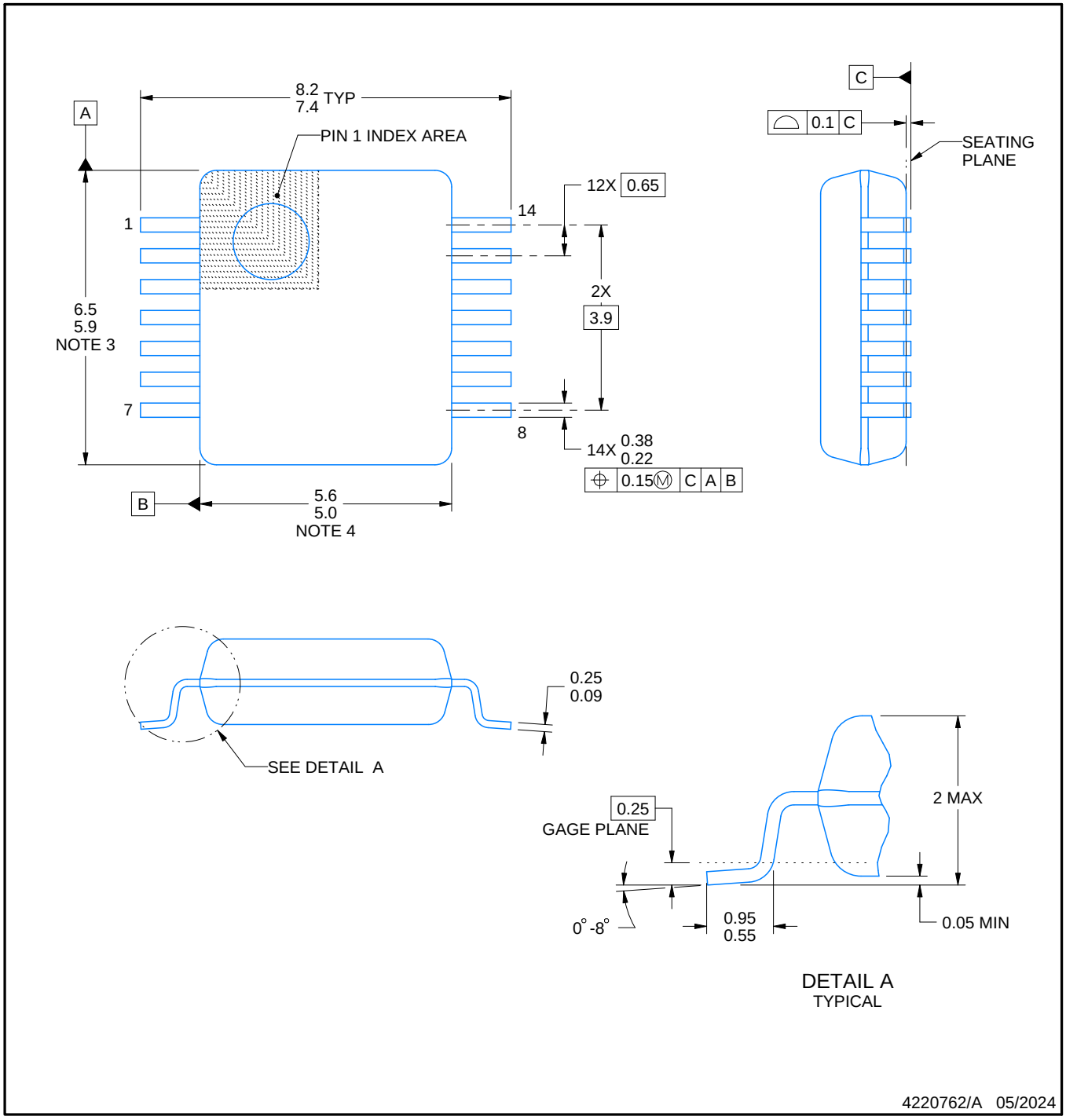

NOTES:

1. All linear dimensions are in millimeters. Any dimensions in parenthesis are for reference only. Dimensioning and tolerancing per ASME Y14.5M.
2. This drawing is subject to change without notice.
3. This dimension does not include mold flash, protrusions, or gate burrs. Mold flash, protrusions, or gate burrs shall not exceed 0.15 mm per side.
4. Reference JEDEC registration MO-150.

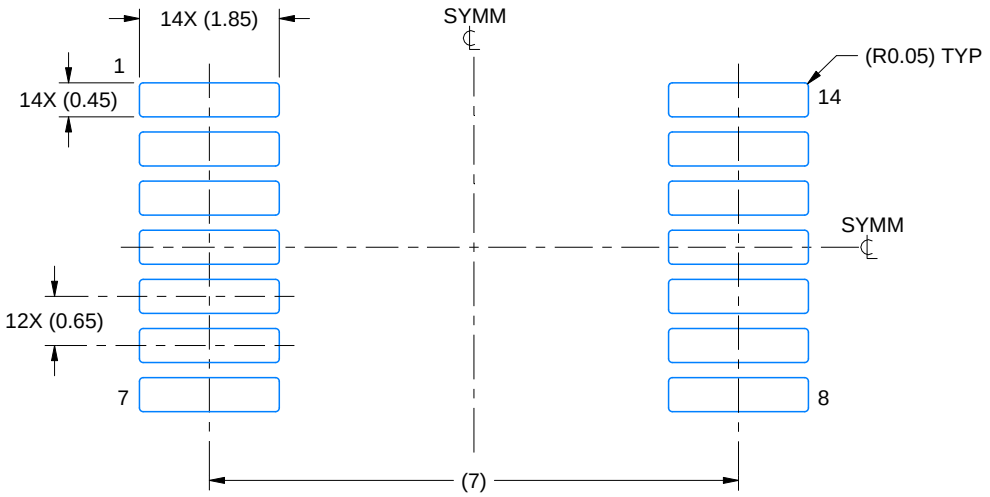

LAND PATTERN EXAMPLE
EXPOSED METAL SHOWN
SCALE: 10X

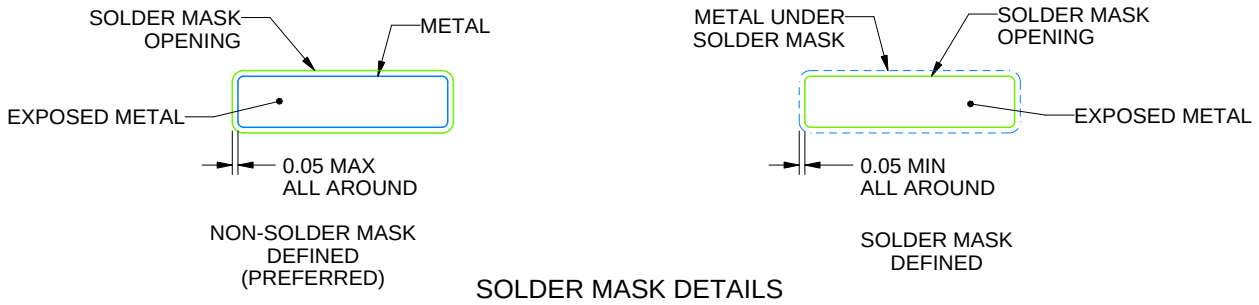

SOLDER MASK DETAILS

4220762/A 05/2024

NOTES: (continued)

5. Publication IPC-7351 may have alternate designs.
6. Solder mask tolerances between and around signal pads can vary based on board fabrication site.

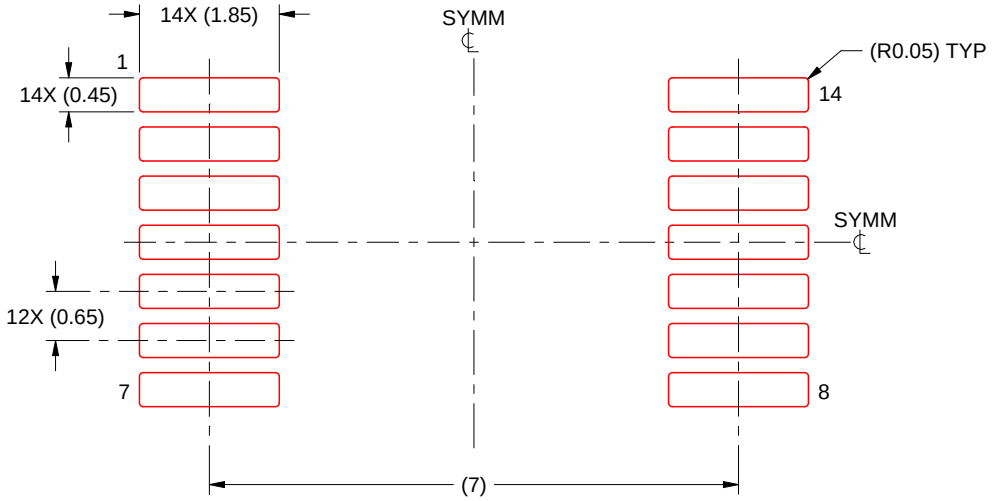

SOLDER PASTE EXAMPLE
BASED ON 0.125 mm THICK STENCIL
SCALE: 10X

4220762/A 05/2024

NOTES: (continued)

7. Laser cutting apertures with trapezoidal walls and rounded corners may offer better paste release. IPC-7525 may have alternate design recommendations.
8. Board assembly site may have different recommendations for stencil design.

GENERIC PACKAGE VIEW

FK 20

LCCC - 2.03 mm max height

8.89 x 8.89, 1.27 mm pitch

LEADLESS CERAMIC CHIP CARRIER

This image is a representation of the package family, actual package may vary.
Refer to the product data sheet for package details.

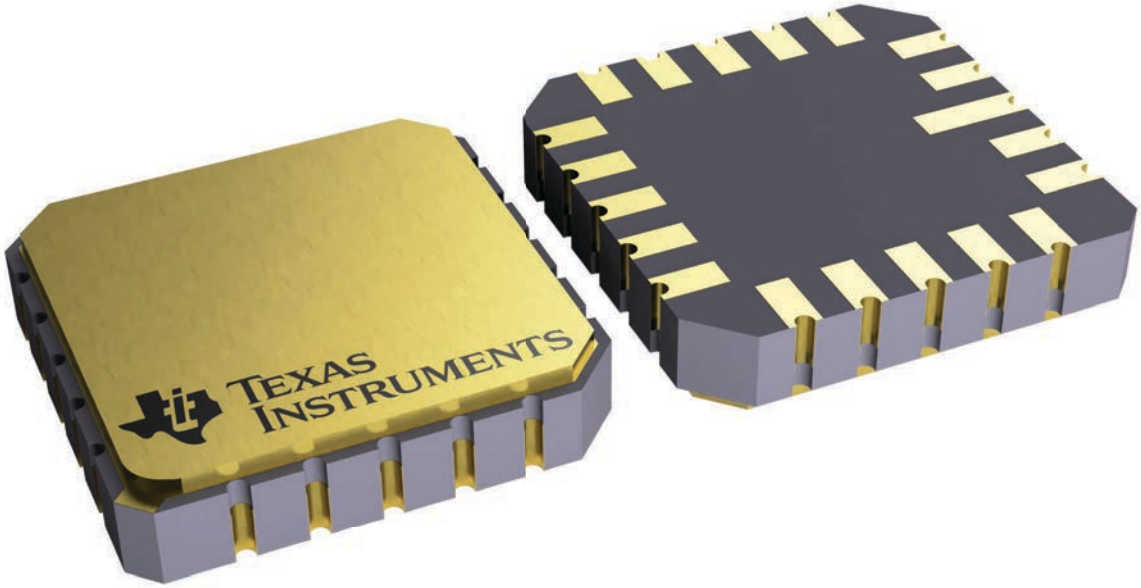

4229370VA\

J 14 CDIP - 5.08 mm max height

CERAMIC DUAL IN LINE PACKAGE

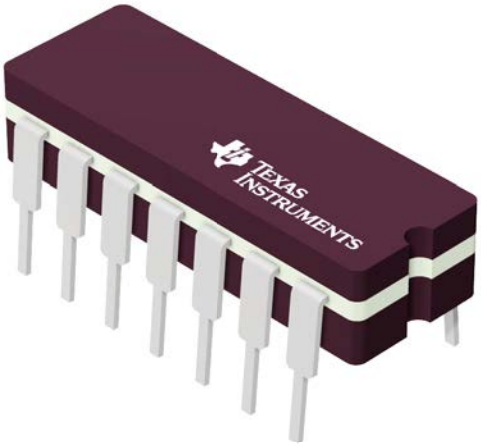

Images above are just a representation of the package family, actual package may vary.
Refer to the product data sheet for package details.

4040083-5/G

PACKAGE OUTLINE

J0014A

CDIP - 5.08 mm max height

CERAMIC DUAL IN LINE PACKAGE

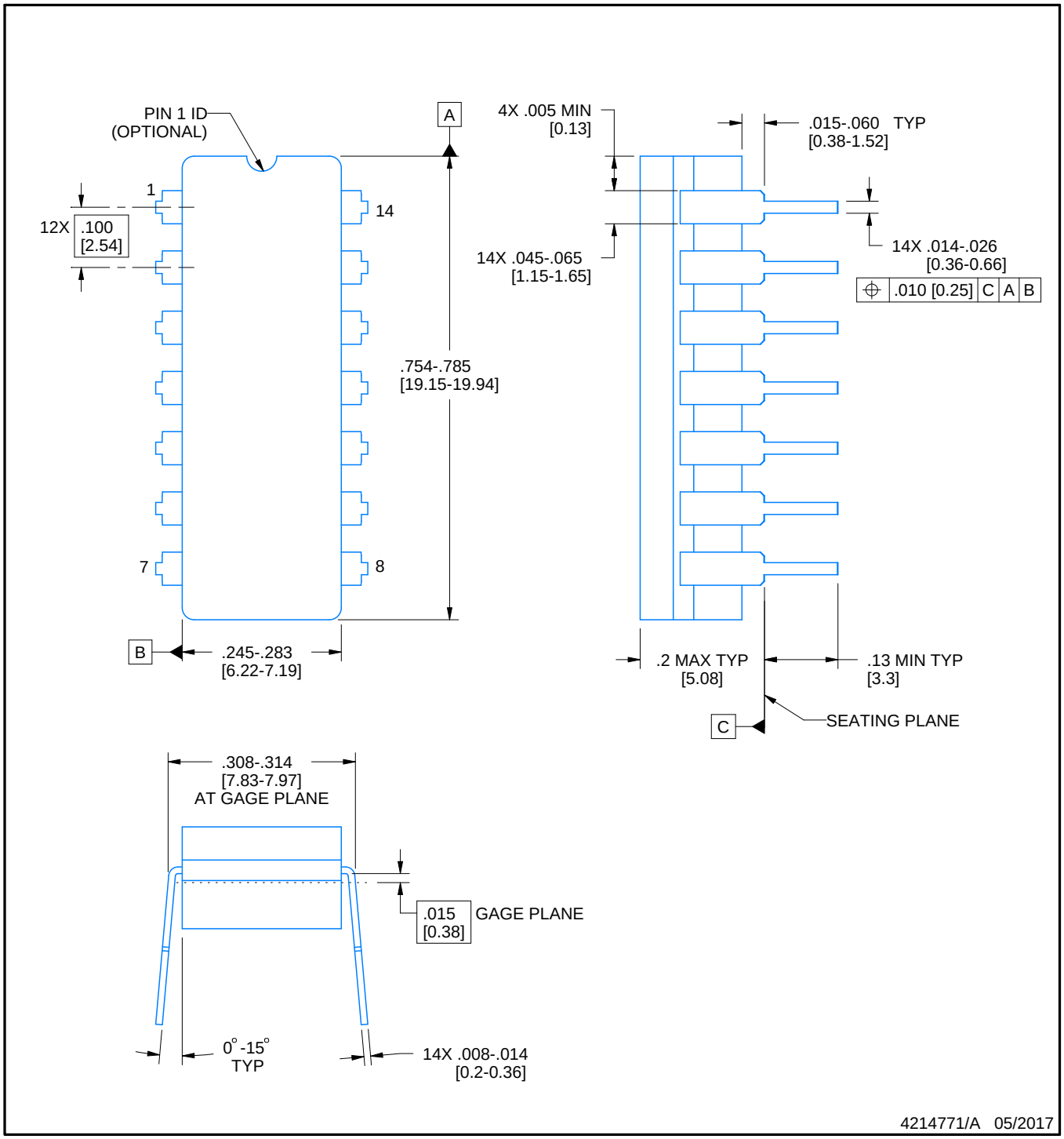

NOTES:

1. All controlling linear dimensions are in inches. Dimensions in brackets are in millimeters. Any dimension in brackets or parenthesis are for reference only. Dimensioning and tolerancing per ASME Y14.5M.
2. This drawing is subject to change without notice.
3. This package is hermitically sealed with a ceramic lid using glass frit.
4. Index point is provided on cap for terminal identification only and on press ceramic glass frit seal only.
5. Falls within MIL-STD-1835 and GDIP1-T14.

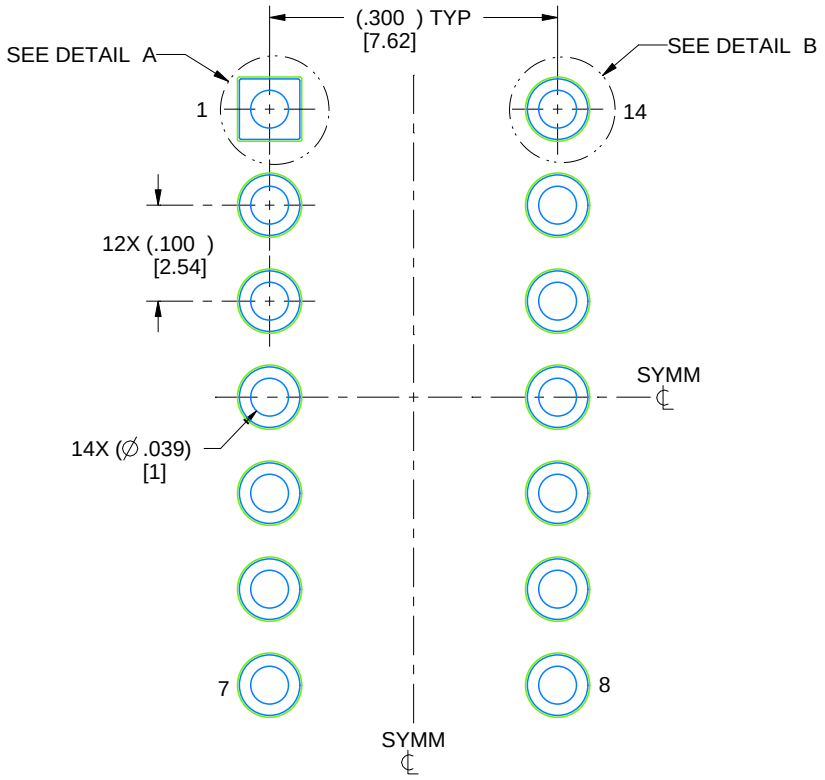

LAND PATTERN EXAMPLE
NON-SOLDER MASK DEFINED
SCALE: 5X

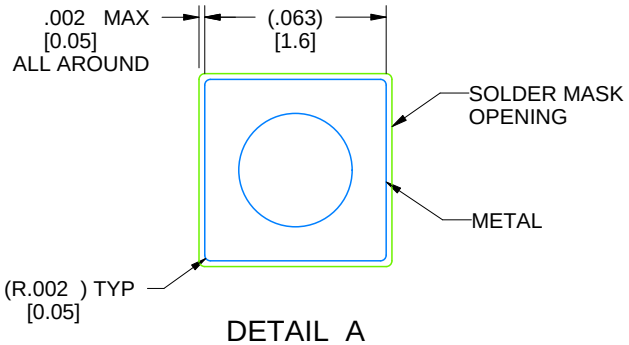

DETAIL A
SCALE: 15X

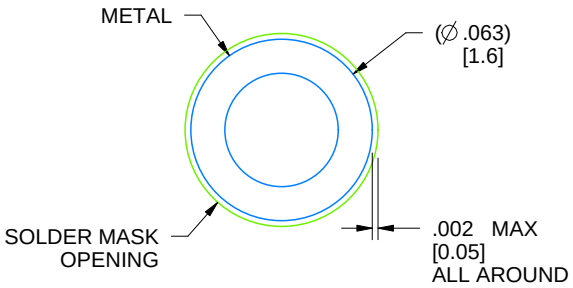

DETAIL B
13X, SCALE: 15X

4214771/A 05/2017

N (R–PDIP–T**) PLASTIC DUAL–IN–LINE PACKAGE

16 PINS SHOWN

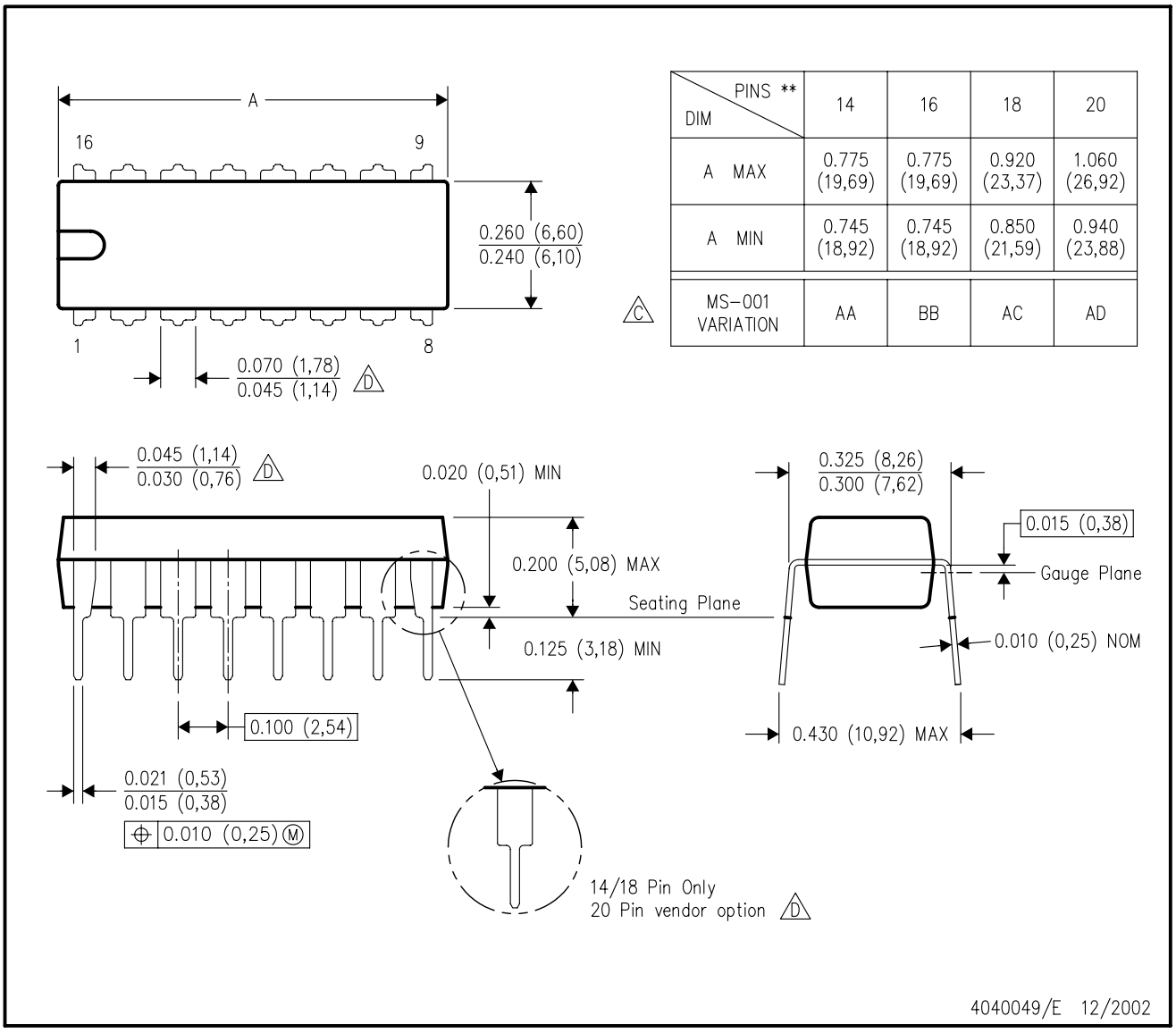

DIM \ PINS **	14	16	18	20
A MAX	0.775 (19,69)	0.775 (19,69)	0.920 (23,37)	1.060 (26,92)
A MIN	0.745 (18,92)	0.745 (18,92)	0.850 (21,59)	0.940 (23,88)
MS–001 VARIATION (C)	AA	BB	AC	AD

NOTES:
A. All linear dimensions are in inches (millimeters).
B. This drawing is subject to change without notice.
C. Falls within JEDEC MS–001, except 18 and 20 pin minimum body length (Dim A).
D. The 20 pin end lead shoulder width is a vendor option, either half or full width.

IMPORTANT NOTICE AND DISCLAIMER

TI PROVIDES TECHNICAL AND RELIABILITY DATA (INCLUDING DATASHEETS), DESIGN RESOURCES (INCLUDING REFERENCE DESIGNS), APPLICATION OR OTHER DESIGN ADVICE, WEB TOOLS, SAFETY INFORMATION, AND OTHER RESOURCES “AS IS” AND WITH ALL FAULTS, AND DISCLAIMS ALL WARRANTIES, EXPRESS AND IMPLIED, INCLUDING WITHOUT LIMITATION ANY IMPLIED WARRANTIES OF MERCHANTABILITY, FITNESS FOR A PARTICULAR PURPOSE OR NON-INFRINGEMENT OF THIRD PARTY INTELLECTUAL PROPERTY RIGHTS.

These resources are intended for skilled developers designing with TI products. You are solely responsible for (1) selecting the appropriate TI products for your application, (2) designing, validating and testing your application, and (3) ensuring your application meets applicable standards, and any other safety, security, regulatory or other requirements.

These resources are subject to change without notice. TI grants you permission to use these resources only for development of an application that uses the TI products described in the resource. Other reproduction and display of these resources is prohibited. No license is granted to any other TI intellectual property right or to any third party intellectual property right. TI disclaims responsibility for, and you fully indemnify TI and its representatives against any claims, damages, costs, losses, and liabilities arising out of your use of these resources.

TI’s products are provided subject to TI’s Terms of Sale, TI’s General Quality Guidelines, or other applicable terms available either on ti.com or provided in conjunction with such TI products. TI’s provision of these resources does not expand or otherwise alter TI’s applicable warranties or warranty disclaimers for TI products. Unless TI explicitly designates a product as custom or customer-specified, TI products are standard, catalog, general purpose devices.

TI objects to and rejects any additional or different terms you may propose.

Copyright © 2026, Texas Instruments Incorporated

Last updated 10/2025