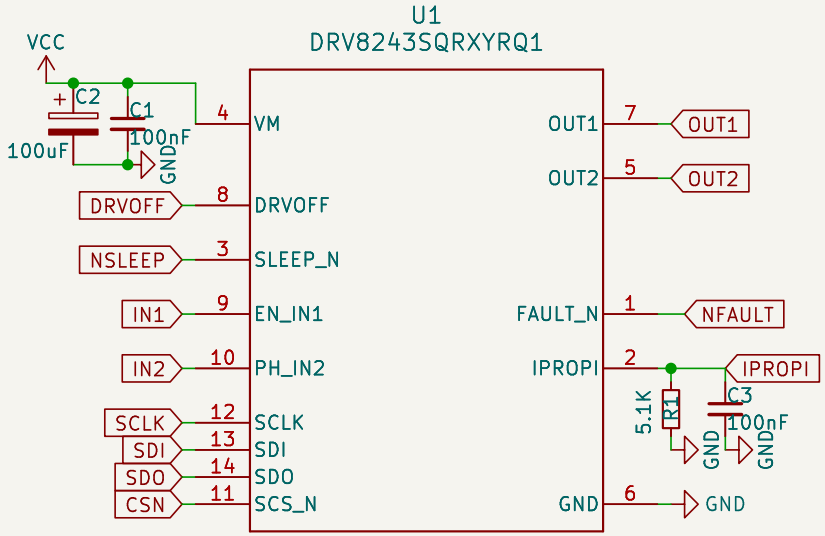

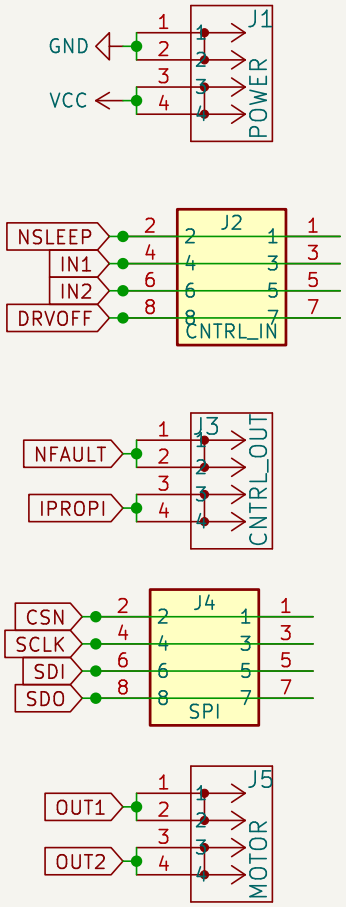

I_IPROPI = (I_HS1 + I_HS2) / A_IPROPI

A_IPROI = 3070
I_HSx = 3A
R = 5V/I_PROPI_MAX
R = 5/9.77*10^-4
R = 5116.7
R = 5.1K

H1 MountingHole
H2 MountingHole
H3 MountingHole
H4 MountingHole

PAN ROBOTICS

Pan Robotics

Sheet: /
File: DRV8243 DC Motor Driver Expander.kicad_sch

Title: DRV8243 DC Motor Driver Expander

Size: A5	Date: 2024-02-03	**Rev: V1**
KiCad E.D.A. kicad 7.0.9		Id: 1/1