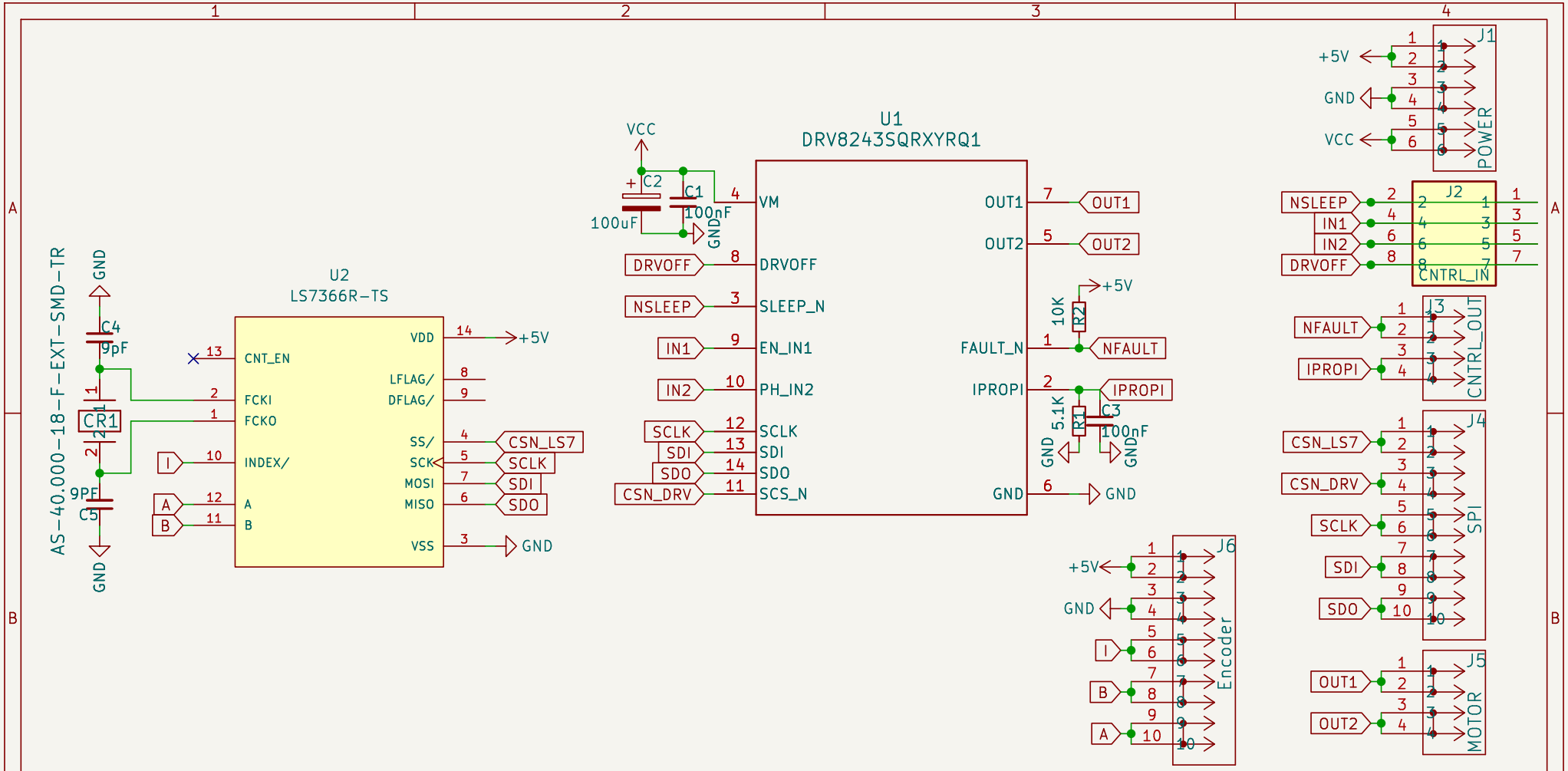

I_IPROPI = (I_HS1 + I_HS2) / A_IPROPI
A_IPROI = 3070
I_HSx = 3A
R = 5V/I_PROPI_MAX
R = 5/9.77*10^-4
R = 5116.7
R = 5.1K

Cm = 2(C L - C P) - 10pF, where
C L = manufacturer's specified crystal load capacitance.
C P = PCB parasitic capacitance seen by the crystal.

Pan Robotics

Sheet: /
File: DRV8243 - LS7366R DC Motion Controller.kicad_sch

Title: DRV8243 - LS7366R DC Motion Controller

Size: A5	Date: 2024-02-08	**Rev: V1**
KiCad E.D.A. kicad 7.0.9		Id: 1/1