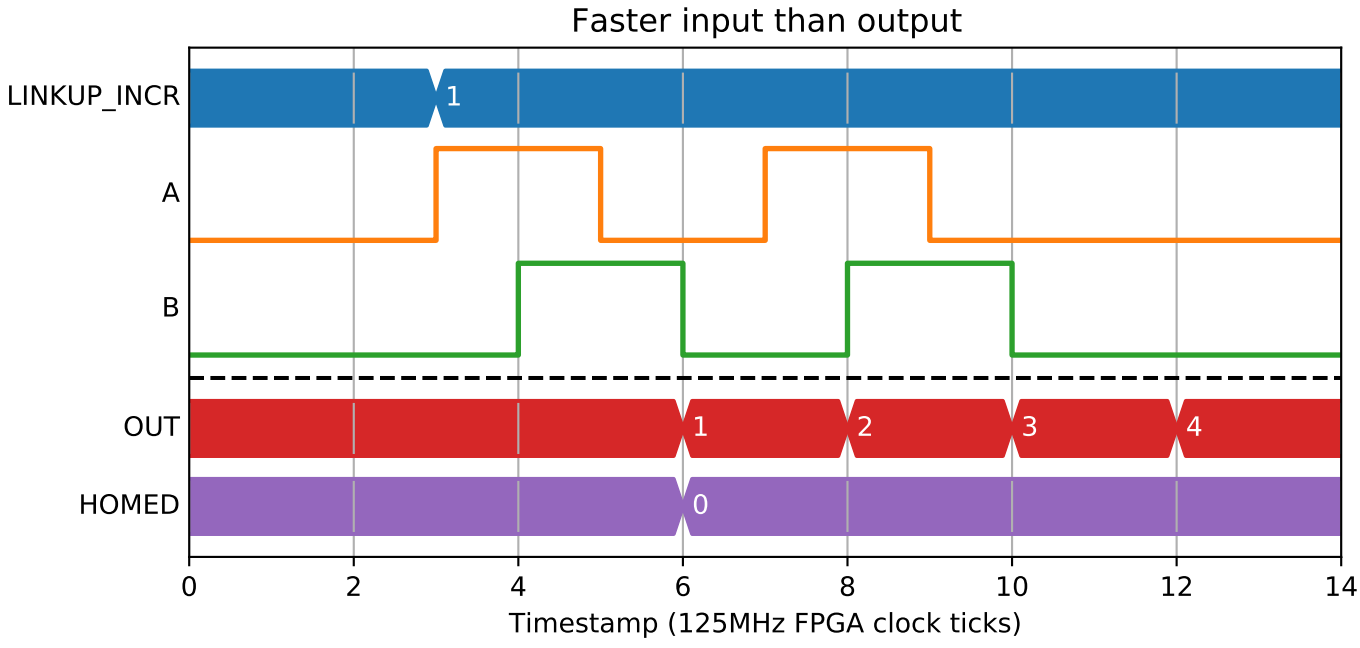
Faster input than output
LINKUP_INCR
A
B
OUT
HOMED
1
1
2
3
4
0
0
2
4
6
8
10
12
14
Timestamp (125MHz FPGA clock ticks)