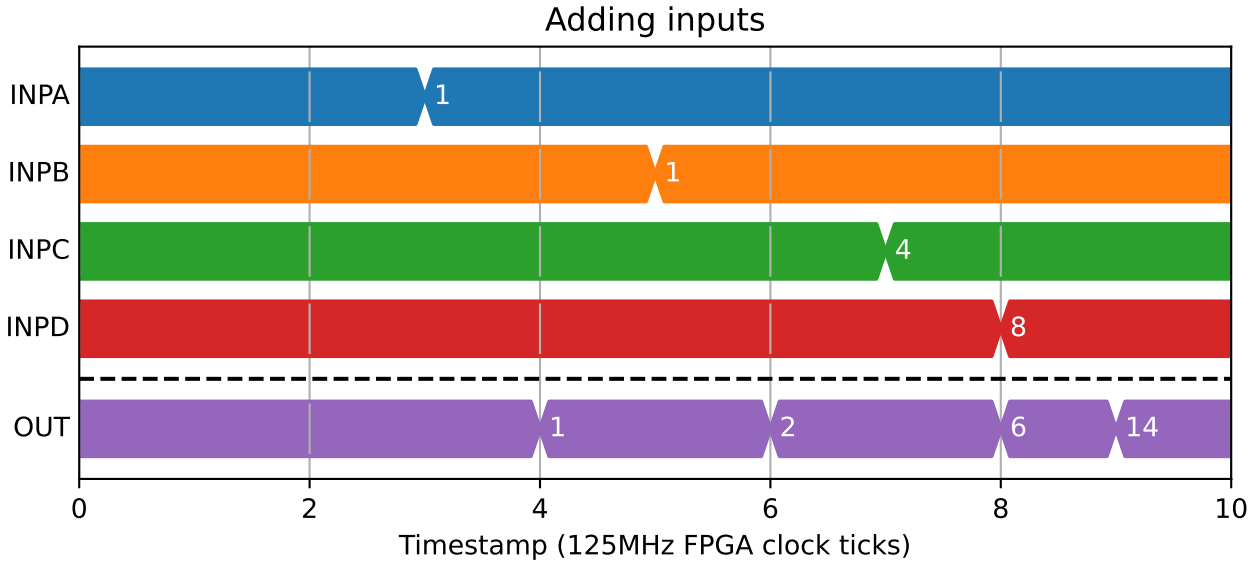
Adding inputs
INPA
INPB
INPC
INPD
OUT
1
1
4
8
1
2
6
14
0
2
4
6
8
10
Timestamp (125MHz FPGA clock ticks)