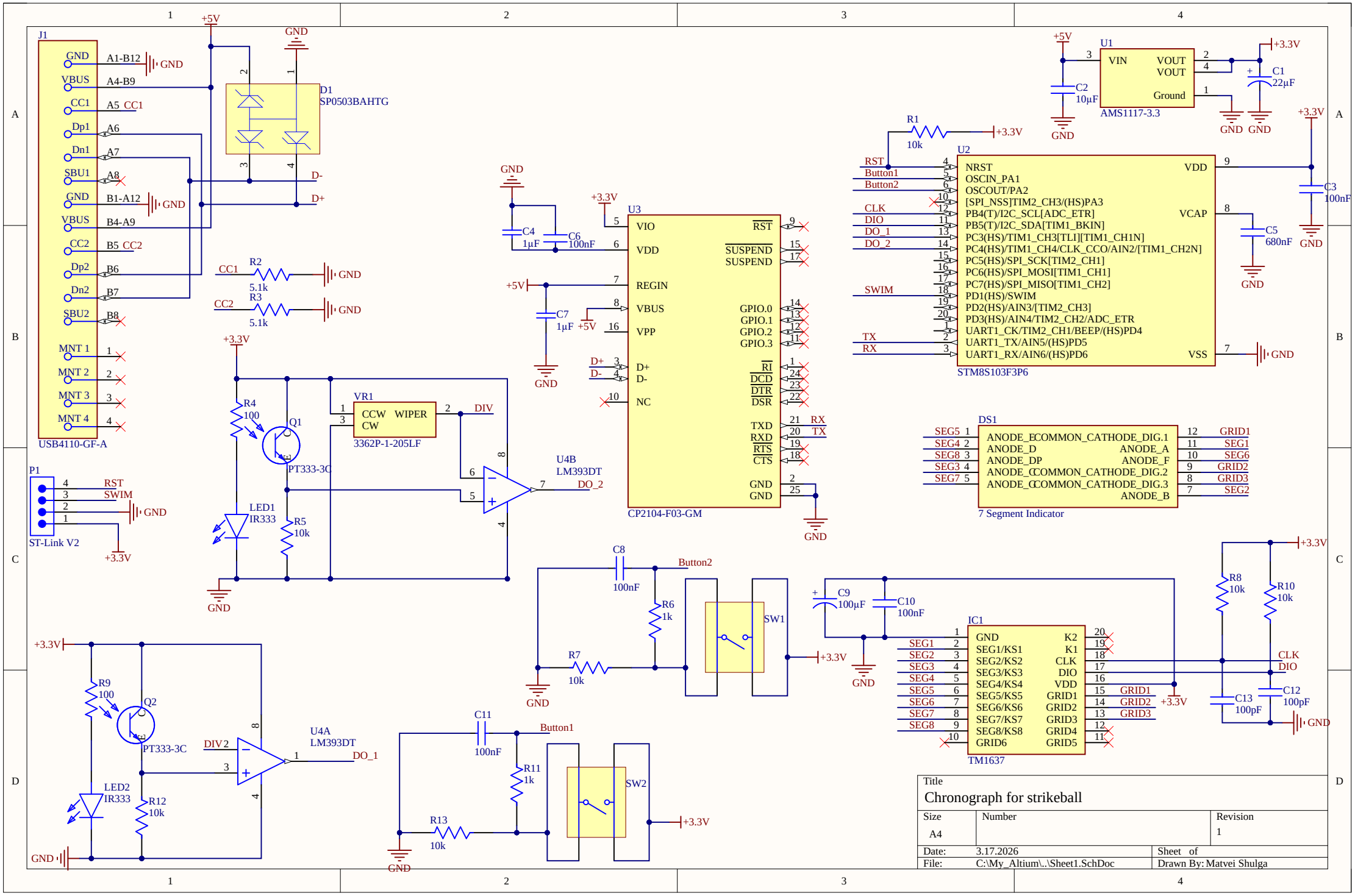
J1
USB4110-GF-A
GND
VBUS
CC1
Dp1
Dn1
SBU1
CC2
Dp2
Dn2
SBU2
MNT 1
MNT 2
MNT 3
MNT 4
A1-B12
A4-B9
A5 CC1
A6
A7
A8
B1-A12
B4-A9
B5 CC2
B6
B7
B8
D1
SP0503BAHTG
D-
D+
+5V
R2
5.1k
R3
5.1k
CC1
CC2
P1
ST-Link V2
RST
SWIM
+3.3V
R4
100
Q1
PT333-3C
LED1
IR333
R5
10k
VR1
3362P-1-205LF
CCW
WIPER
CW
DIV
U4B
LM393DT
DO_2
U3
CP2104-F03-GM
VIO
VDD
REGIN
VBUS
VPP
D+
D-
NC
RST
SUSPEND
SUSPEND
GPIO.0
GPIO.1
GPIO.2
GPIO.3
RI
DCD
DTR
DSR
TXD
RXD
RTS
CTS
GND
C4
1µF
C6
100nF
C7
1µF
U1
AMS1117-3.3
VIN
VOUT
VOUT
Ground
C1
22µF
C2
10µF
R1
10k
U2
STM8S103F3P6
NRST
OSCIN_PA1
OSCOUT/PA2
[SPI_NSS]TIM2_CH3/(HS)PA3
PB4(T)/I2C_SCL[ADC_ETR]
PB5(T)/I2C_SDA[TIM1_BKIN]
PC3(HS)/TIM1_CH3[TLI][TIM1_CH1N]
PC4(HS)/TIM1_CH4/CLK_CCO/AIN2/[TIM1_CH2N]
PC5(HS)/SPI_SCK[TIM2_CH1]
PC6(HS)/SPI_MOSI[TIM1_CH1]
PC7(HS)/SPI_MISO[TIM1_CH2]
PD1(HS)/SWIM
PD2(HS)/AIN3/[TIM2_CH3]
PD3(HS)/AIN4/TIM2_CH2/ADC_ETR
UART1_CK/TIM2_CH1/BEEP/(HS)PD4
UART1_TX/AIN5/(HS)PD5
UART1_RX/AIN6/(HS)PD6
VDD
VCAP
VSS
Button1
Button2
CLK
DIO
DO_1
DO_2
TX
RX
C3
100nF
C5
680nF
DS1
7 Segment Indicator
ANODE_E
COMMON_CATHODE_DIG.1
ANODE_D
ANODE_A
ANODE_DP
ANODE_F
ANODE_C
COMMON_CATHODE_DIG.2
ANODE_G
COMMON_CATHODE_DIG.3
ANODE_B
SEG5
SEG4
SEG8
SEG3
SEG7
GRID1
SEG1
SEG6
GRID2
GRID3
SEG2
C8
100nF
R6
1k
R7
10k
SW1
C9
100µF
C10
100nF
IC1
TM1637
SEG1
SEG2
SEG3
SEG4
SEG5
SEG6
SEG7
SEG8
GND
SEG1/KS1
SEG2/KS2
SEG3/KS3
SEG4/KS4
SEG5/KS5
SEG6/KS6
SEG7/KS7
SEG8/KS8
GRID6
K2
K1
CLK
DIO
VDD
GRID1
GRID2
GRID3
GRID4
GRID5
R8
10k
R10
10k
C13
100pF
C12
100pF
R9
100
Q2
PT333-3C
LED2
IR333
R12
10k
U4A
LM393DT
DO_1
C11
100nF
R11
1k
R13
10k
SW2
Title
Chronograph for strikeball
Size
A4
Number
Revision
1
Date: 3.17.2026
Sheet of
File: C:\My_Altium\..\Sheet1.SchDoc
Drawn By: Matvei Shulga

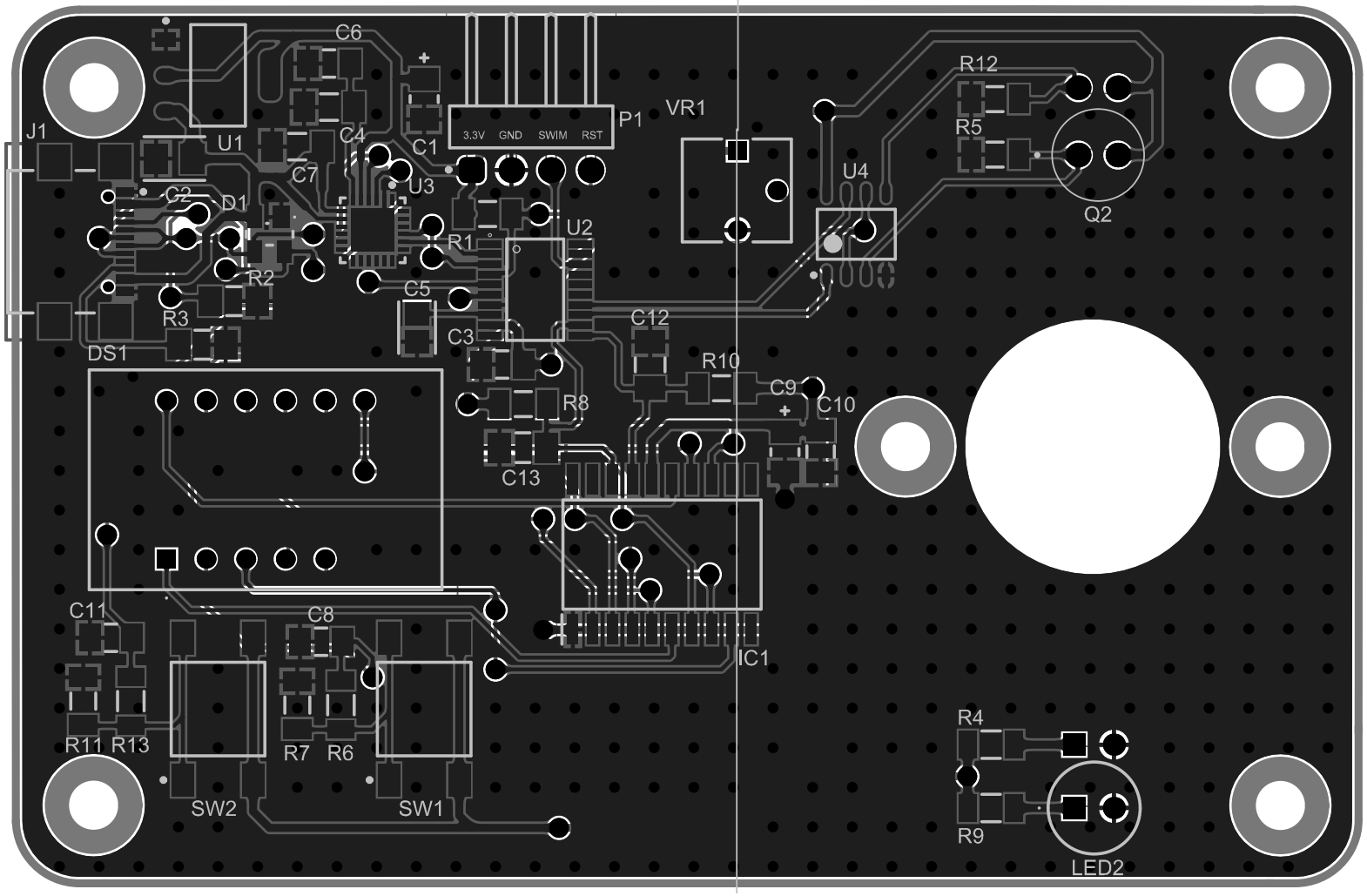
C6
U1
J1
C4
C1
C7
U3
C2
D1
R1
U2
R2
C5
R3
C3
DS1
P1
3.3V
GND
SWIM
RST
VR1
U4
R12
R5
Q2
C12
R10
C9
C10
R8
C13
C11
C8
IC1
R11
R13
R7
R6
SW2
SW1
R4
R9
LED2

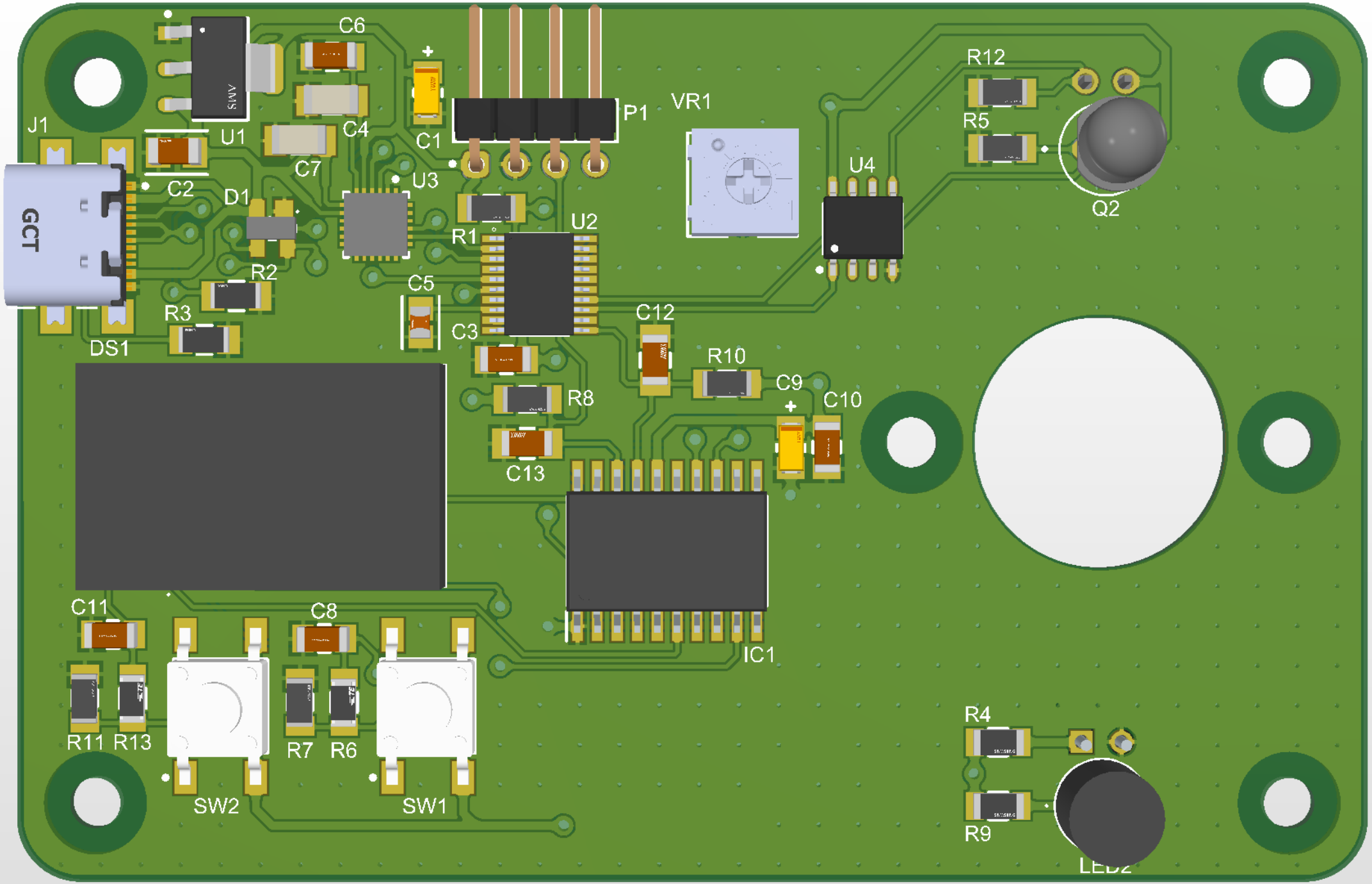
J1
GCT
U1
C6
C4
C7
C2
D1
U3
C1
P1
VR1
R12
R5
U4
Q2
R1
U2
R2
C5
R3
C3
C12
DS1
R10
C9
C10
R8
C13
IC1
C11
C8
R11
R13
R7
R6
SW2
SW1
R4
R9
LED2

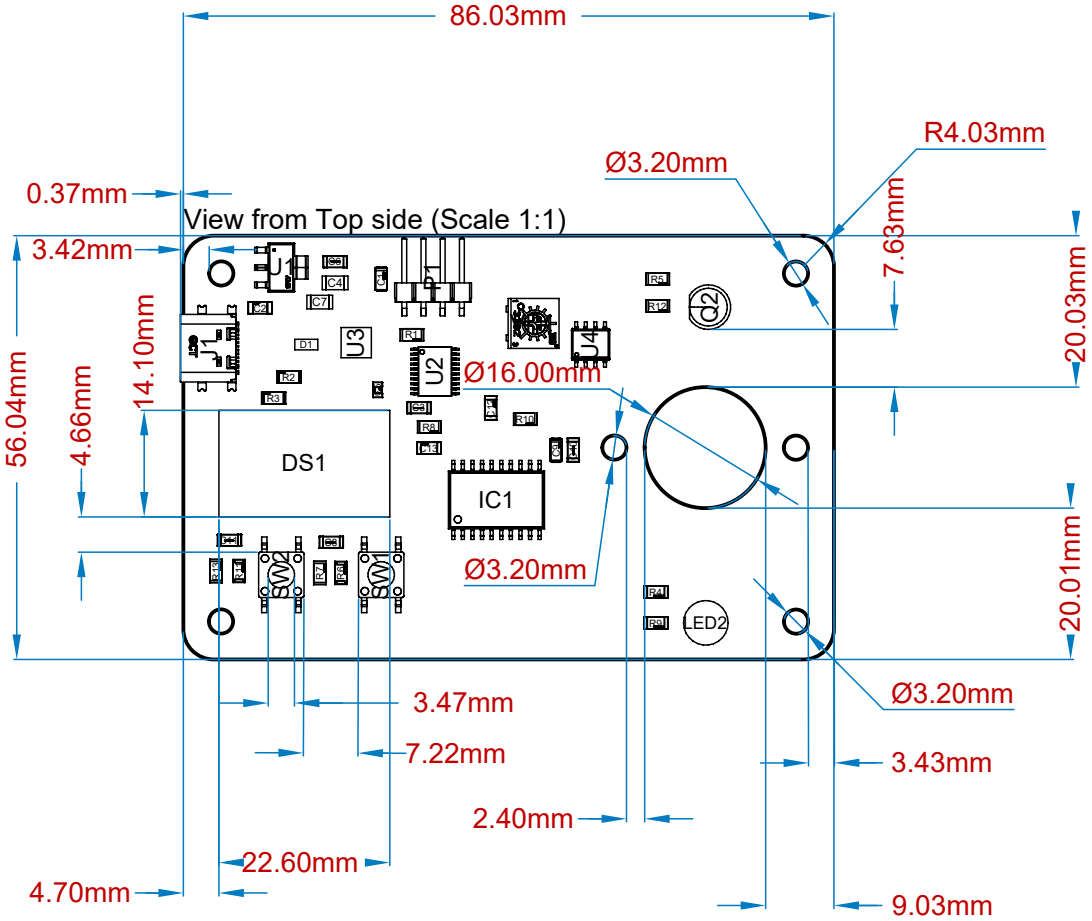
View from Top side (Scale 1:1)
86.03mm
0.37mm
3.42mm
56.04mm
4.66mm
14.10mm
Ø3.20mm
R4.03mm
7.63mm
20.03mm
Ø16.00mm
20.01mm
Ø3.20mm
Ø3.20mm
3.47mm
7.22mm
2.40mm
22.60mm
4.70mm
3.43mm
9.03mm
DS1
IC1
U1
U2
U3
U4
J1
LED2

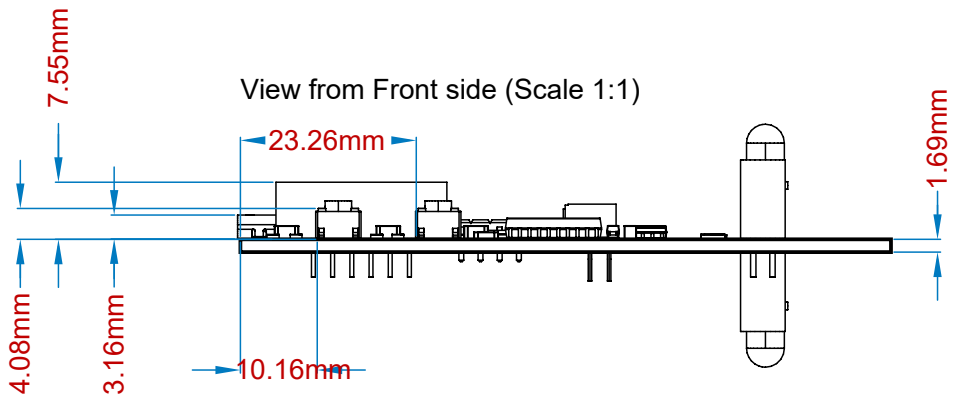
View from Front side (Scale 1:1)
7.55mm
23.26mm
1.69mm
4.08mm
3.16mm
10.16mm

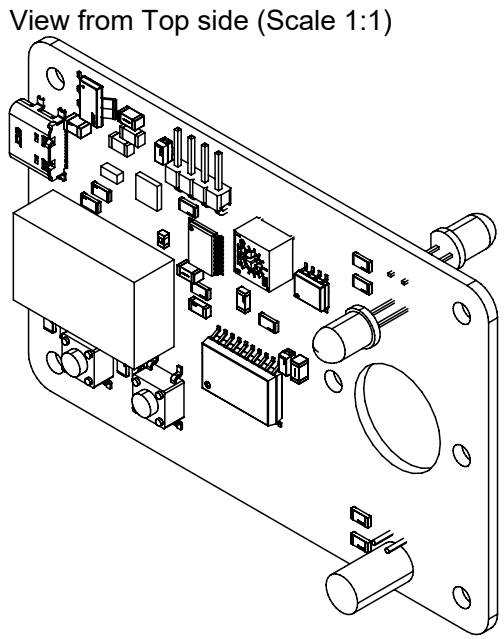
View from Top side (Scale 1:1)

Top Layer (Scale 1:1)

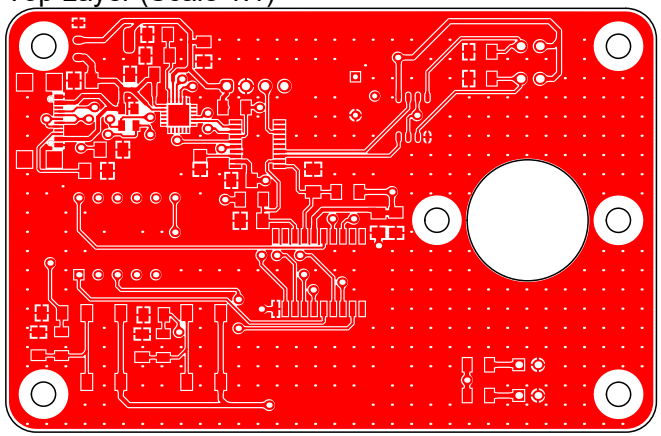

Bottom Layer (Scale 1:1)

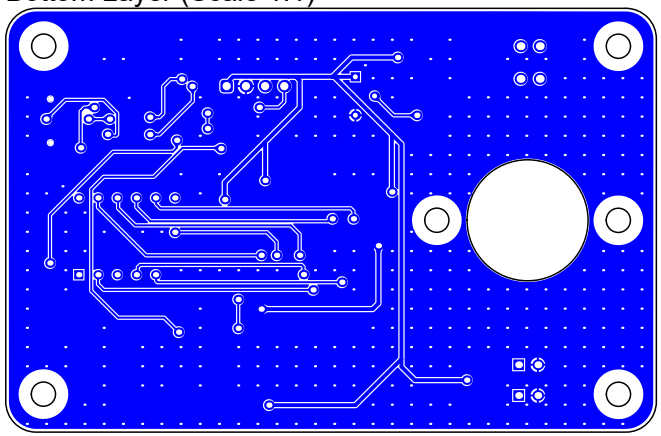

Drill Drawing View (Scale 1:1)

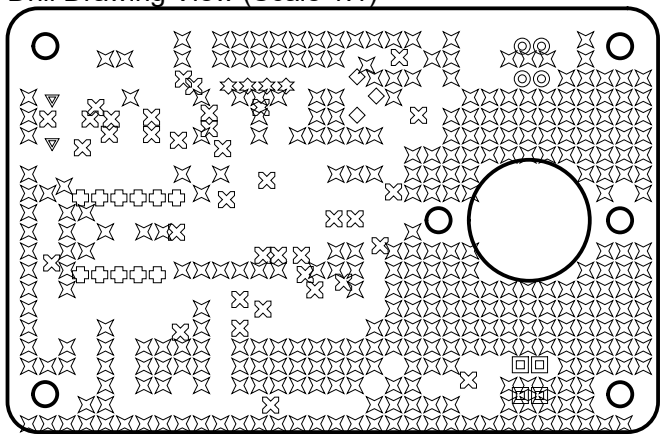

Drill Table

Symbol	Count	Hole Size	Plated	Hole Tolerance
	338	0.30mm	Plated	
	2	0.65mm	Non-Plated	
	3	0.66mm	Plated	
	11	0.71mm	Plated	
	37	0.71mm	Plated	
	4	0.91mm	Plated	
	4	1.05mm	Plated	
	4	1.10mm	Plated	
	403 Total			

Layer Stack Legend

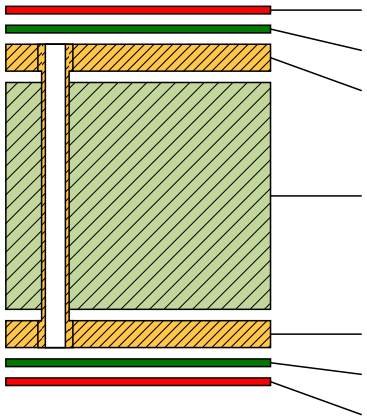

Material	Layer	Thickness	Dielectric Material	Type	Gerber
	Top Overlay			Legend	GTO
Surface Material	Top Solder	0.01mm	Solder Resist	Solder Mask	GTS
Copper	**Top Layer**	**0.04mm**		**Signal**	**GTL**
		1.60mm	*FR-4*	*Dielectric*	
Copper	**Bottom Layer**	**0.04mm**		**Signal**	**GBL**
Surface Material	Bottom Solder	0.01mm	Solder Resist	Solder Mask	GBS
	Bottom Overlay			Legend	GBO

Total thickness: 1.69mm