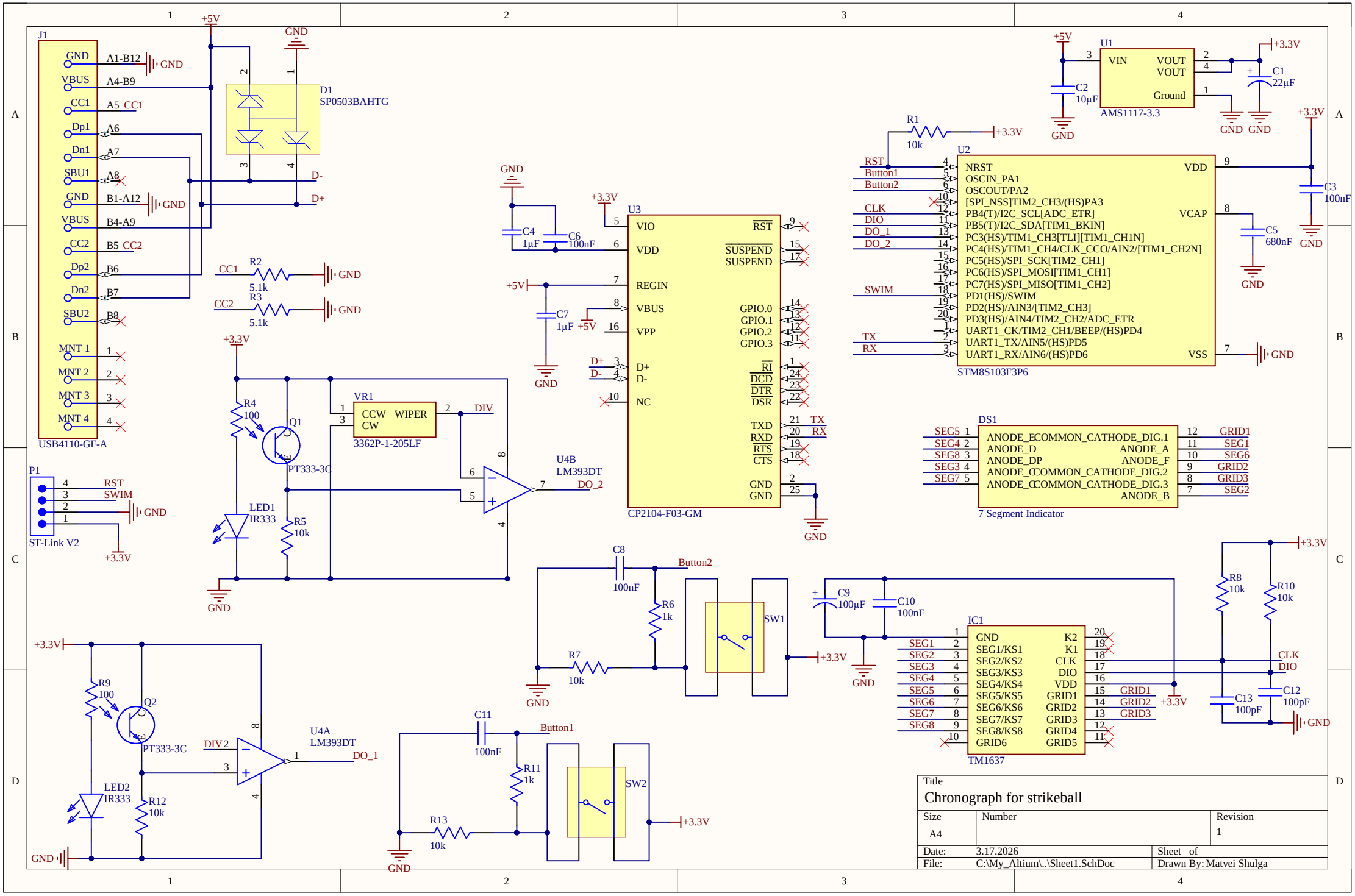
J1
USB4110-GF-A
D1
SP0503BAHTG
U1
AMS1117-3.3
U2
STM8S103F3P6
U3
CP2104-F03-GM
VR1
3362P-1-205LF
U4A
LM393DT
U4B
LM393DT
P1
ST-Link V2
DS1
7 Segment Indicator
IC1
TM1637
SW1
SW2
Title
Chronograph for strikeball
Size
A4
Number
Revision
1
Date: 3.17.2026
File: C:\My_Altium\..\Sheet1.SchDoc
Sheet of
Drawn By: Matvei Shulga

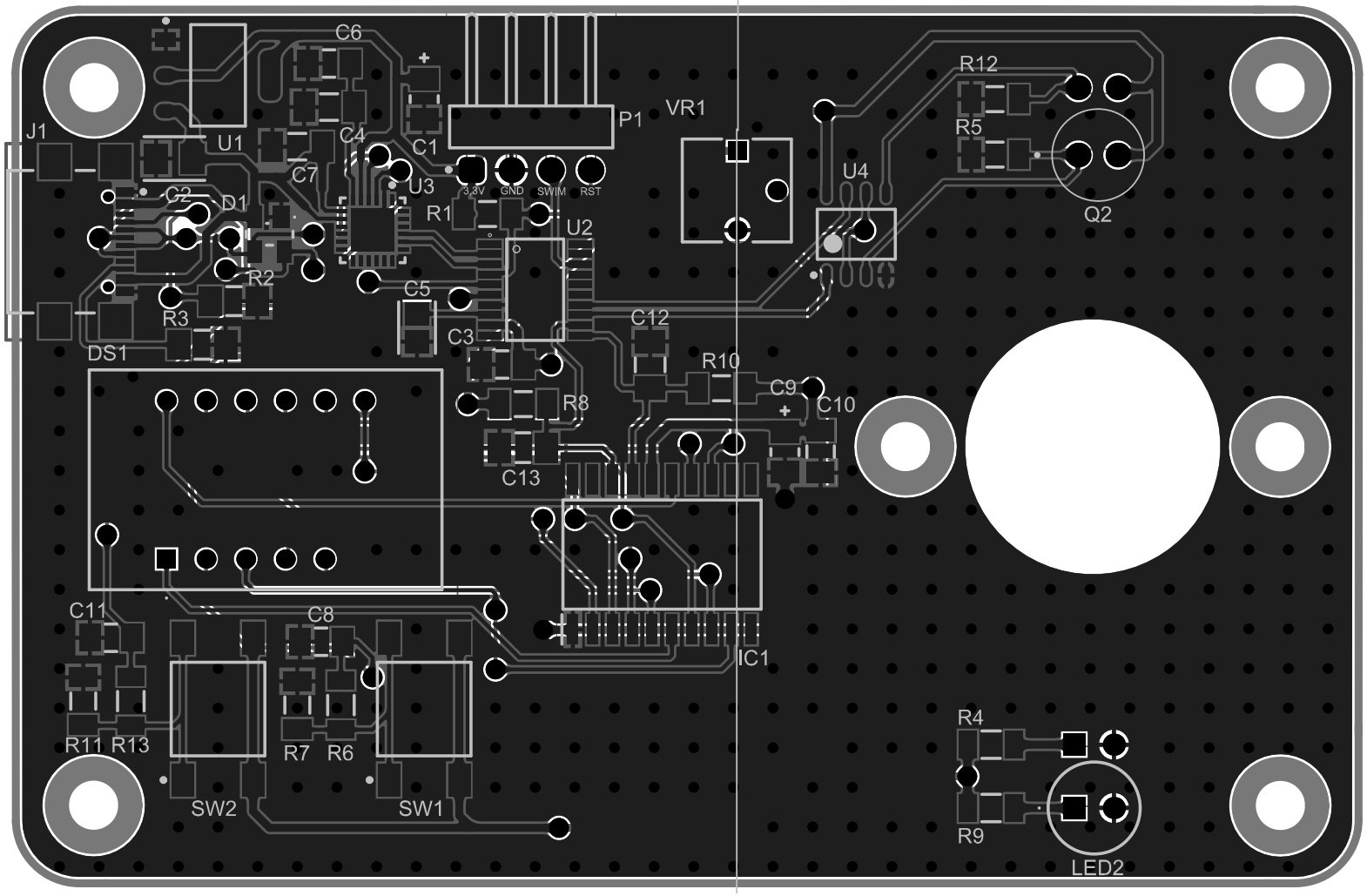
C6
P1
VR1
R12
R5
J1
U1
C4
C1
C7
U3
3,3V
GND
SWIM
RST
U4
Q2
C2
D1
R1
U2
R2
C5
R3
C12
C3
DS1
R10
C9
C10
R8
C13
C11
C8
IC1
R11
R13
R7
R6
R4
SW2
SW1
R9
LED2

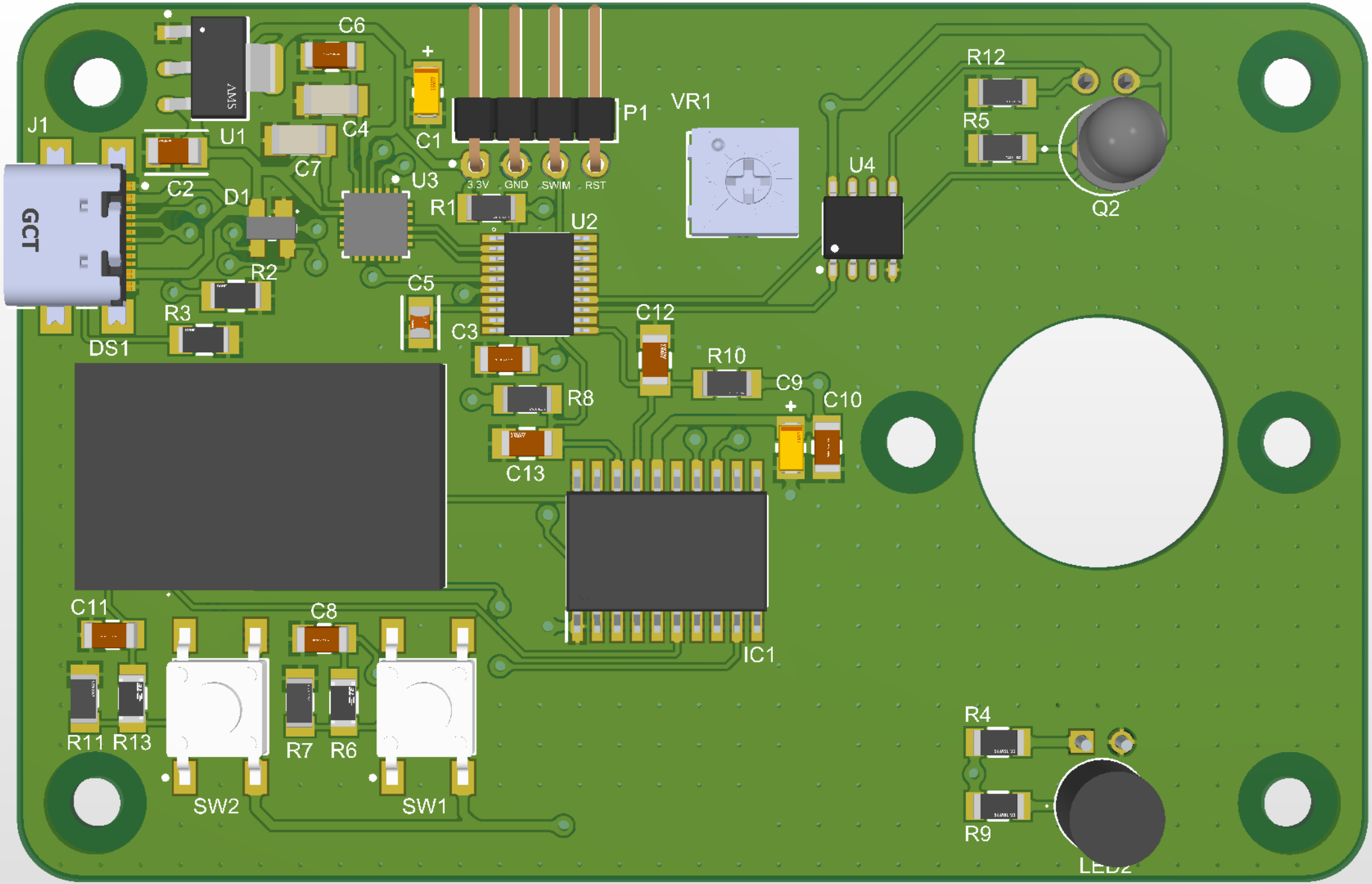
C6
C4
C7
U1
C2
J1
GCT
D1
U3
R2
R3
DS1
C1
P1
3.3V
GND
SWIM
RST
R1
U2
C5
C3
VR1
U4
R12
R5
Q2
C12
R10
C9
C10
R8
C13
IC1
C11
C8
R11
R13
R7
R6
SW2
SW1
R4
R9
LED2

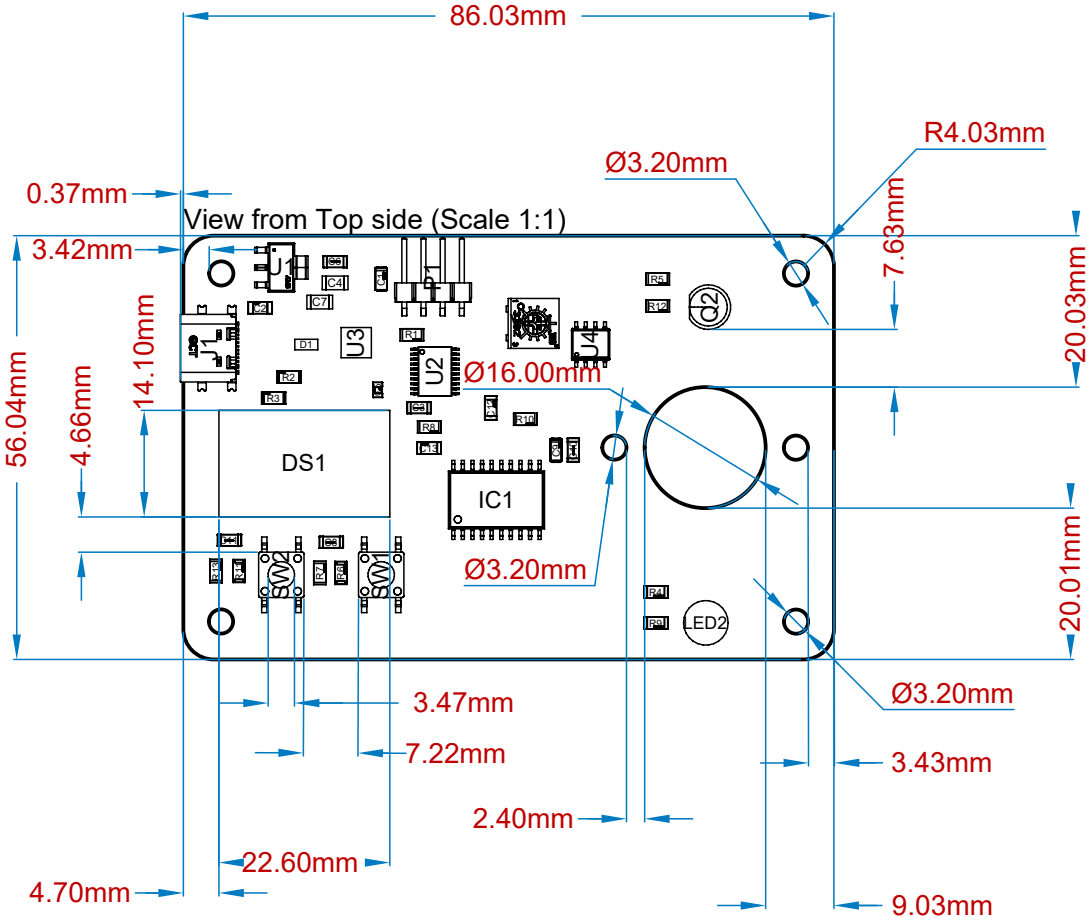
View from Top side (Scale 1:1)
86.03mm
0.37mm
3.42mm
56.04mm
4.66mm
14.10mm
Ø3.20mm
R4.03mm
7.63mm
20.03mm
Ø16.00mm
20.01mm
Ø3.20mm
Ø3.20mm
3.47mm
7.22mm
2.40mm
22.60mm
4.70mm
3.43mm
9.03mm
DS1
IC1
U1
U2
U3
U4
J1
LED2

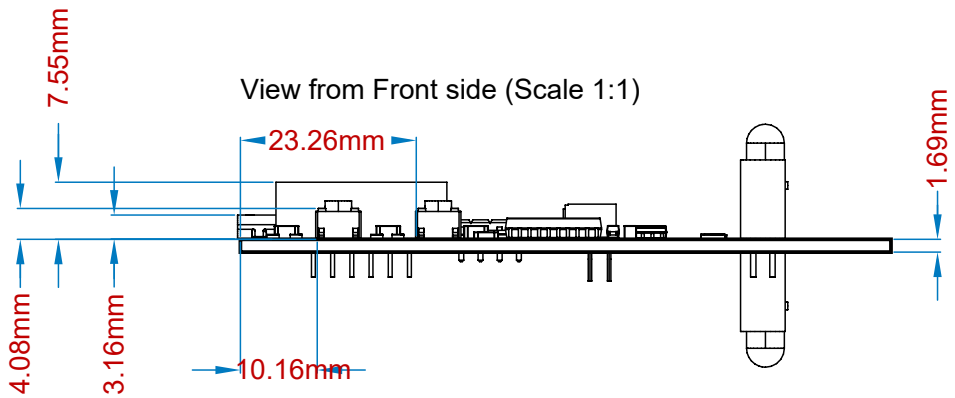
View from Front side (Scale 1:1)
7.55mm
23.26mm
1.69mm
4.08mm
3.16mm
10.16mm

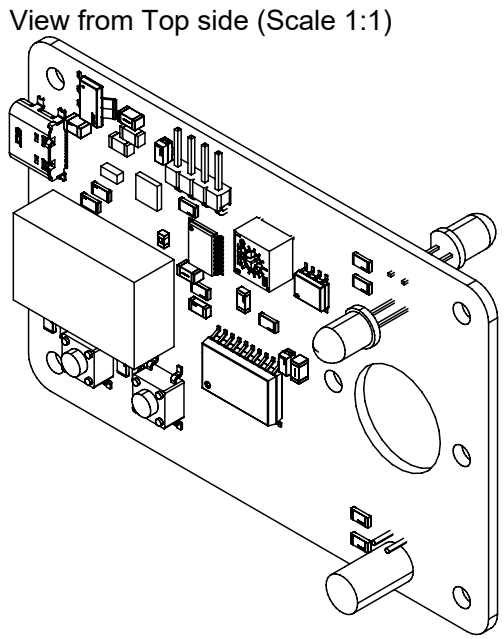
View from Top side (Scale 1:1)

Top Layer (Scale 1:1)

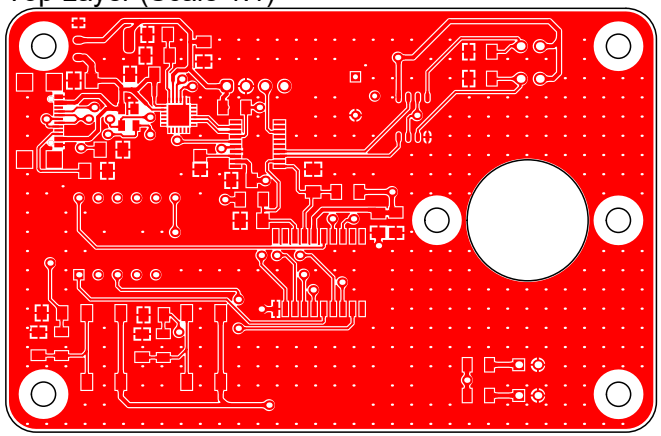

Bottom Layer (Scale 1:1)

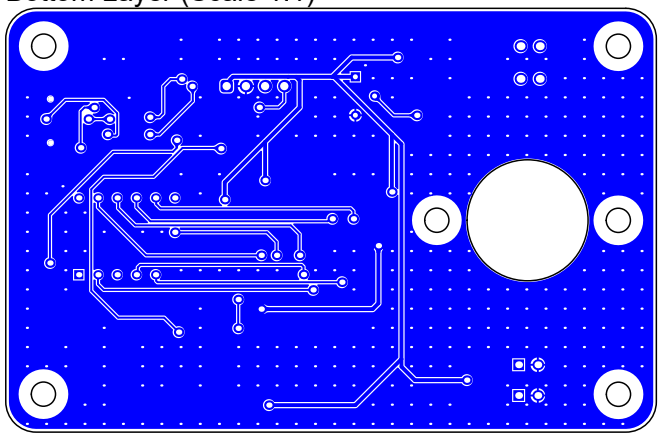

Drill Drawing View (Scale 1:1)

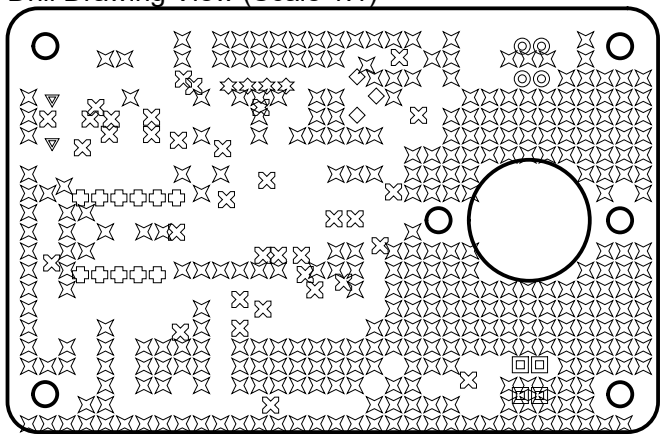

Drill Table

Symbol	Count	Hole Size	Plated	Hole Tolerance
	338	0.30mm	Plated	
	2	0.65mm	Non-Plated	
	3	0.66mm	Plated	
	11	0.71mm	Plated	
	35	0.71mm	Plated	
	4	0.91mm	Plated	
	4	1.05mm	Plated	
	4	1.10mm	Plated	
	401 Total			

Layer Stack Legend

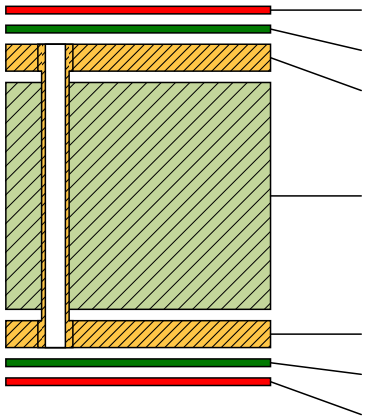

Material	Layer	Thickness	Dielectric Material	Type	Gerber
	Top Overlay			Legend	GTO
Surface Material	Top Solder	0.01mm	Solder Resist	Solder Mask	GTS
Copper	**Top Layer**	**0.04mm**		**Signal**	**GTL**
		1.60mm	*FR-4*	*Dielectric*	
Copper	**Bottom Layer**	**0.04mm**		**Signal**	**GBL**
Surface Material	Bottom Solder	0.01mm	Solder Resist	Solder Mask	GBS
	Bottom Overlay			Legend	GBO

Total thickness: 1.69mm