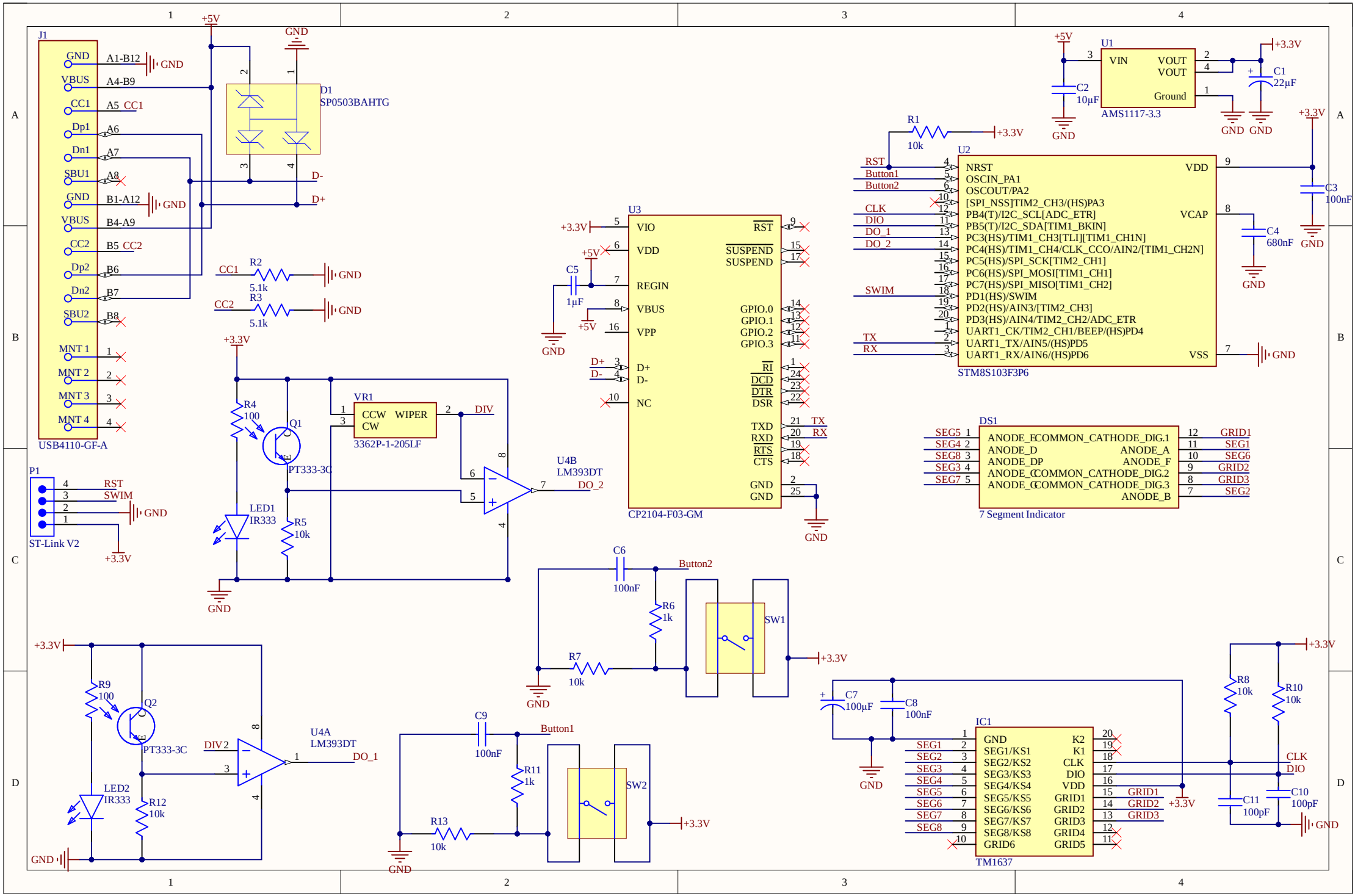
J1
USB4110-GF-A
GND
VBUS
CC1
Dp1
Dn1
SBU1
CC2
Dp2
Dn2
SBU2
MNT 1
MNT 2
MNT 3
MNT 4
A1-B12
A4-B9
A5 CC1
A6
A7
A8
B1-A12
B4-A9
B5 CC2
B6
B7
B8
D1
SP0503BAHTG
D-
D+
+5V
R2
5.1k
R3
5.1k
CC1
CC2
P1
ST-Link V2
RST
SWIM
+3.3V
R4
100
Q1
PT333-3C
LED1
IR333
R5
10k
VR1
3362P-1-205LF
CCW
CW
WIPER
DIV
U4B
LM393DT
DO_2
U3
CP2104-F03-GM
VIO
VDD
REGIN
VBUS
VPP
D+
D-
NC
RST
SUSPEND
SUSPEND
GPIO.0
GPIO.1
GPIO.2
GPIO.3
RI
DCD
DTR
DSR
TXD
RXD
RTS
CTS
TX
RX
C5
1µF
C6
100nF
R6
1k
R7
10k
SW1
R9
100
Q2
PT333-3C
LED2
IR333
R12
10k
U4A
LM393DT
DO_1
C9
100nF
R11
1k
R13
10k
SW2
Button1
Button2
U1
AMS1117-3.3
VIN
VOUT
VOUT
Ground
C2
10µF
C1
22µF
R1
10k
U2
STM8S103F3P6
NRST
OSCIN_PA1
OSCOUT/PA2
[SPI_NSS]TIM2_CH3/(HS)PA3
PB4(T)/I2C_SCL[ADC_ETR]
PB5(T)/I2C_SDA[TIM1_BKIN]
PC3(HS)/TIM1_CH3[TLI][TIM1_CH1N]
PC4(HS)/TIM1_CH4/CLK_CCO/AIN2/[TIM1_CH2N]
PC5(HS)/SPI_SCK[TIM2_CH1]
PC6(HS)/SPI_MOSI[TIM1_CH1]
PC7(HS)/SPI_MISO[TIM1_CH2]
PD1(HS)/SWIM
PD2(HS)/AIN3/[TIM2_CH3]
PD3(HS)/AIN4/TIM2_CH2/ADC_ETR
UART1_CK/TIM2_CH1/BEEP/(HS)PD4
UART1_TX/AIN5/(HS)PD5
UART1_RX/AIN6/(HS)PD6
VDD
VCAP
VSS
C3
100nF
C4
680nF
DS1
7 Segment Indicator
ANODE_E
COMMON_CATHODE_DIG.1
ANODE_D
ANODE_A
ANODE_DP
ANODE_F
ANODE_C
COMMON_CATHODE_DIG.2
ANODE_G
COMMON_CATHODE_DIG.3
ANODE_B
SEG5
SEG4
SEG8
SEG3
SEG7
GRID1
SEG1
SEG6
GRID2
GRID3
SEG2
IC1
TM1637
GND
SEG1/KS1
SEG2/KS2
SEG3/KS3
SEG4/KS4
SEG5/KS5
SEG6/KS6
SEG7/KS7
SEG8/KS8
GRID6
K2
K1
CLK
DIO
VDD
GRID1
GRID2
GRID3
GRID4
GRID5
C7
100µF
C8
100nF
R8
10k
R10
10k
C11
100pF
C10
100pF

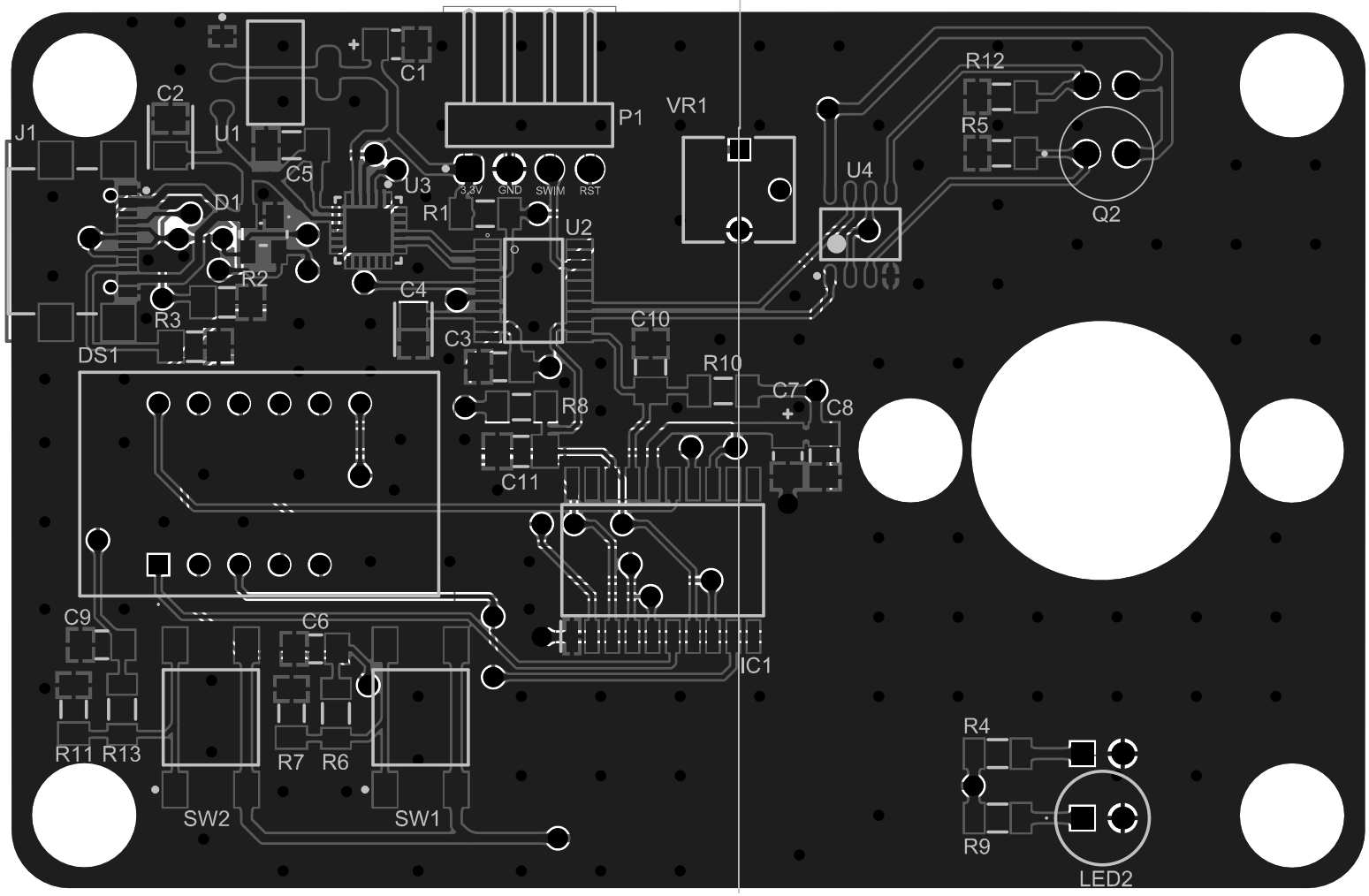
C1
C2
U1
J1
C5
D1
U3
R1
3.3V
GND
SWIM
RST
P1
VR1
U2
R12
R5
U4
Q2
R2
R3
C4
C3
C10
DS1
R10
C7
C8
R8
C11
C9
C6
IC1
R11 R13
R7
R6
SW2
SW1
R4
R9
LED2

Board Stack Report