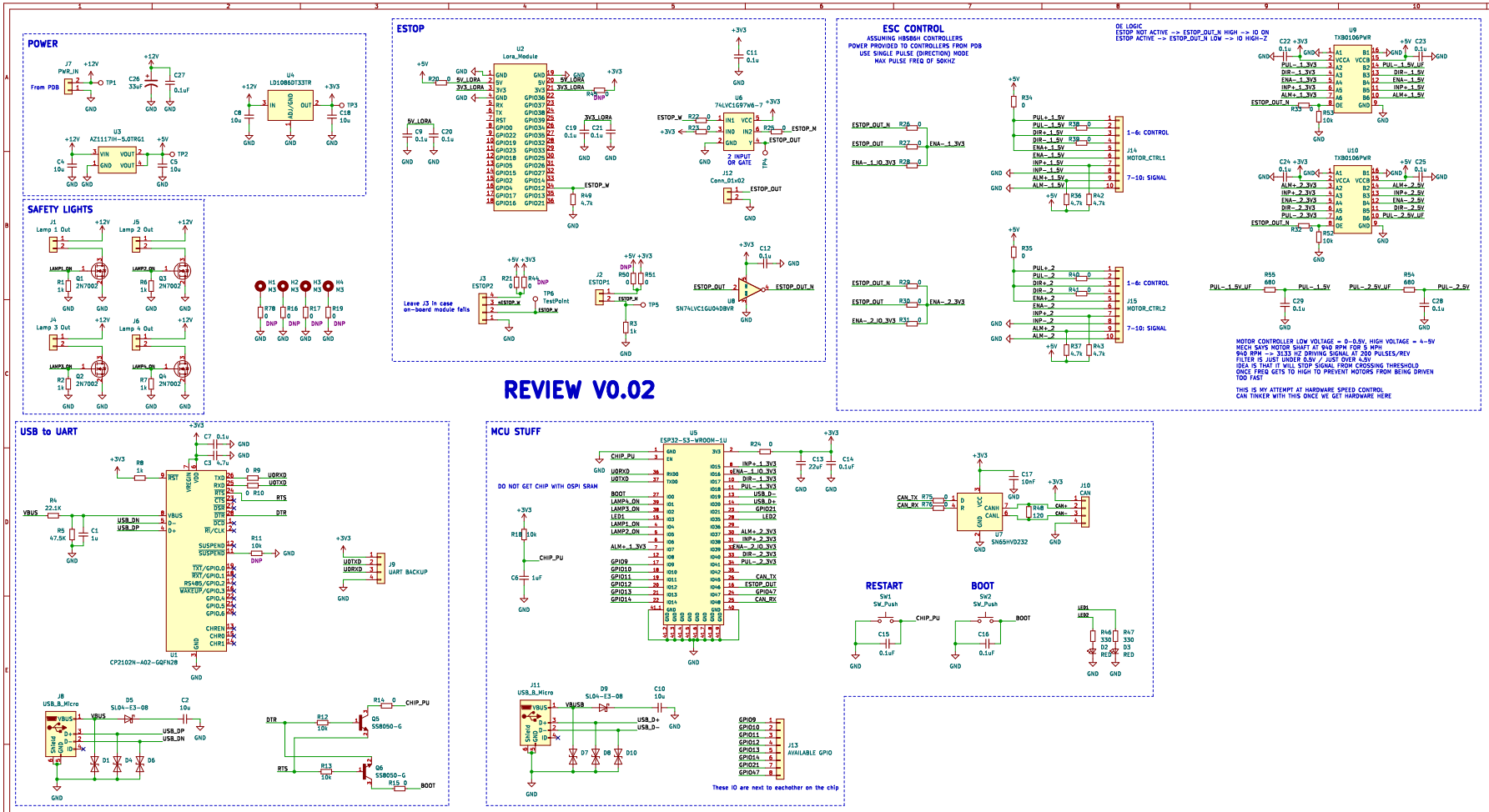
POWER
From PDB
SAFETY LIGHTS
ESTOP
Leave J3 in case on-board module fails
ESC CONTROL
ASSUMING HBS86H CONTROLLERS
POWER PROVIDED TO CONTROLLERS FROM PDB
USE SINGLE PULSE (DIRECTION) MODE
MAX PULSE FREQ OF 50KHZ
OE LOGIC
ESTOP NOT ACTIVE -> ESTOP_OUT_N HIGH -> IO ON
ESTOP ACTIVE -> ESTOP_OUT_N LOW -> IO HIGH-Z
MOTOR CONTROLLER LOW VOLTAGE = 0-0.5V, HIGH VOLTAGE = 4-5V
MECH SAYS MOTOR SHAFT AT 940 RPM FOR 5 MPH
940 RPM -> 3133 HZ DRIVING SIGNAL AT 200 PULSES/REV
FILTER IS JUST UNDER 0.5V / JUST OVER 4.5V
IDEA IS THAT IT WILL STOP SIGNAL FROM CROSSING THRESHOLD
ONCE FREQ GETS TO HIGH TO PREVENT MOTORS FROM BEING DRIVEN
TOO FAST
THIS IS MY ATTEMPT AT HARDWARE SPEED CONTROL
CAN TINKER WITH THIS ONCE WE GET HARDWARE HERE
REVIEW V0.02
USB to UART
MCU STUFF
DO NOT GET CHIP WITH OSPI SRAM
RESTART
BOOT
These IO are next to eachother on the chip
Sheet: /
File: ControlBoard.kicad_sch
Title:
Size: A2
Date:
Rev:
KiCad E.D.A. kicad (6.0.6)
Id: 1/1