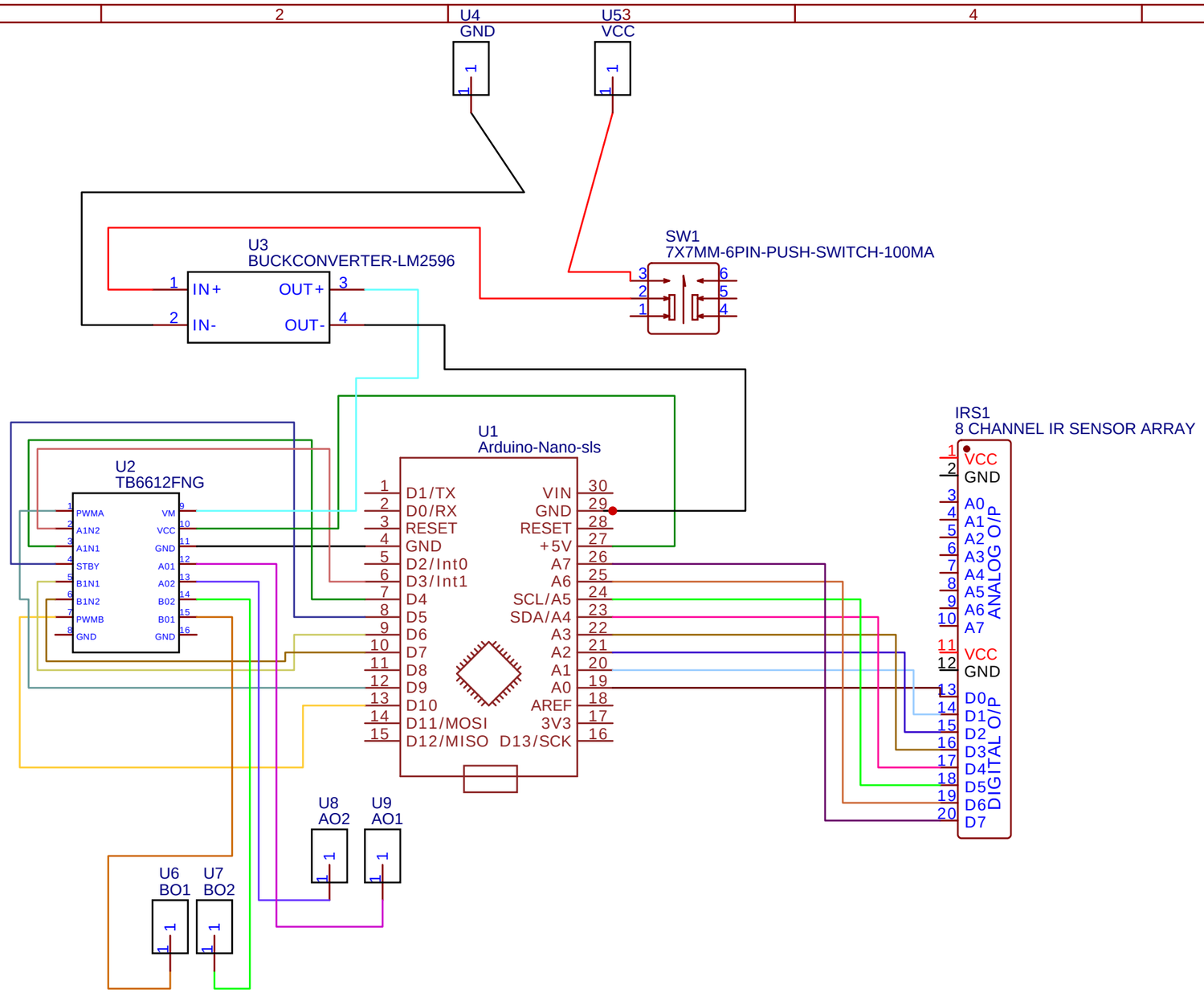

TITLE: PID LINE FOLLOWER

REV: 1.0

Company: Paradox Innovators

Sheet: 1/1

Date: 2024-02-18

Drawn By: ankit_paradox