# Guidance and Control of Unmanned Autonomous Vehicles

Shashi Ranjan Kumar

Associate Professor
Department of Aerospace Engineering
Indian Institute of Technology Bombay
Powai, Mumbai- 400076

https://www.aero.iitb.ac.in/~shashi
srk@aero.iitb.ac.in

# Control Architecture

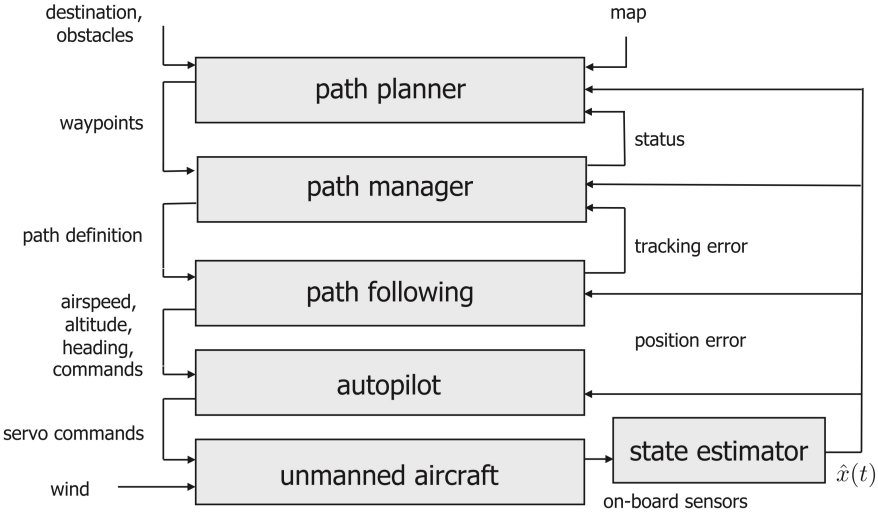

# UAV: Guidance Models

PC: Wikipedia

- Complex equations of motion for UAV considering everything for design purpose
- Necessity to develop significantly less mathematical complex design models that capture essential behavior of the system.
- Approximation of the performance of closed-loop vehicle system to develop reduced-order design models for higher-level guidance design

# UAV: Autopilot Models

- Guidance models use a high-level representation of the autopilot loops.
- **Airspeed and roll-hold loops**, with $b_{V_a}, b_\phi > 0$

$$\dot{V}_a = b_{V_a}\left(V_a^c - V_a\right), \quad \dot{\phi} = b_\phi\left(\phi^c - \phi\right)$$

- Constants $b_{V_a}, b_\phi$ depend on the implementation of autopilot and state estimation techniques
- **Altitude and course-hold loops**, with $b_{\dot{h}}, b_{\dot{\chi}}, b_h, b_\chi > 0$

$$\ddot{h} = b_{\dot{h}}\left(\dot{h}^c - \dot{h}\right) + b_h\left(h^c - h\right), \quad \ddot{\chi} = b_{\dot{\chi}}\left(\dot{\chi}^c - \dot{\chi}\right) + b_\chi\left(\chi^c - \chi\right)$$

- **Load factor**: Ratio of the lift to the weight of UAV
- Autopilot-hold loop for **flight path angle and load factor**, with $b_\gamma > 0,\ b_{\eta_{lf}} > 0$

$$\dot{\gamma} = b_\gamma\left(\gamma^c - \gamma\right), \qquad \dot{\eta}_{lf} = b_{\eta_{lf}}\left(\eta_{lf}^c - \eta_{lf}\right)$$

# UAV: Kinematic Model of Controlled Flight

- How to obtain reduced-order guidance models of UAVs?
- **Simplification**: Eliminate force and moment balance equations of motion
- Elimination of the need to compute complex aerodynamic forces acting on the airframe
- Replacement with simpler kinematic equations for specific flight conditions, such as a coordinated turn and an accelerating climb

- Velocity of UAV w.r.t. the inertial frame

$$\boldsymbol{V}_g^i = V_g \begin{pmatrix} \cos\chi\cos\gamma \\ \sin\chi\cos\gamma \\ -\sin\gamma \end{pmatrix}$$

- Kinematics of UAV

$$\begin{pmatrix} \dot{p}_n \\ \dot{p}_e \\ \dot{h} \end{pmatrix} = V_g \begin{pmatrix} \cos\chi\cos\gamma \\ \sin\chi\cos\gamma \\ \sin\gamma \end{pmatrix}$$

# UAV: Kinematic Model of Controlled Flight

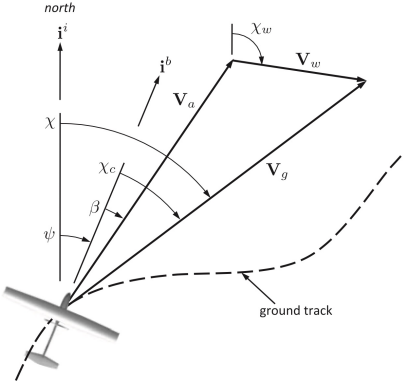


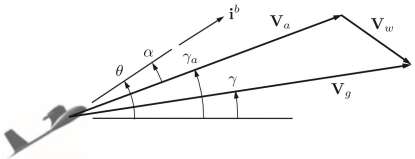


- Control of airspeed and heading is common in practice.

$$\begin{pmatrix} \dot{p}_n \\ \dot{p}_e \\ \dot{h} \end{pmatrix} = V_a \begin{pmatrix} \cos\psi\cos\gamma_a \\ \sin\psi\cos\gamma_a \\ \sin\gamma_a \end{pmatrix} + \begin{pmatrix} w_n \\ w_e \\ -w_d \end{pmatrix}$$

- In case of constant altitude and no upward component of wind

$$\begin{pmatrix} \dot{p}_n \\ \dot{p}_e \\ \dot{h} \end{pmatrix} = V_a \begin{pmatrix} \cos\psi \\ \sin\psi \\ 0 \end{pmatrix} + \begin{pmatrix} w_n \\ w_e \\ 0 \end{pmatrix}$$

- Commonly used kinematic model for the UAV

# UAV: Kinematic Model of Controlled Flight: Coordinated Turn

- **Coordinated turn**: No lateral acceleration in the body frame
- Bank angle set in a way to provide zero net side force acting on the UAV
- For coordinated turn of UAV

$$\dot{\chi} = \frac{g}{V_g} \tan\phi \cos(\chi - \psi)$$

- **Essential behavior of coordinated-turn**: UAV must bank to turn (unlike skid-to-turn)
- Wind triangle, $(\boldsymbol{V}_g - \boldsymbol{V}_w = \boldsymbol{V}_a)$, in component-wise form

$$\begin{pmatrix} \cos\chi\cos\gamma \\ \sin\chi\cos\gamma \\ -\sin\gamma \end{pmatrix} V_g - \begin{pmatrix} w_n \\ w_e \\ w_d \end{pmatrix} = \begin{pmatrix} \cos\psi\cos\gamma_a \\ \sin\psi\cos\gamma_a \\ -\sin\gamma_a \end{pmatrix} V_a$$

# UAV: Kinematic Model of Controlled Flight: Coordinated Turn

- With the time differentiations on both sides

$$\begin{bmatrix} c\chi c\gamma & -V_g s\chi c\gamma & -V_g c\chi s\gamma \\ s\chi c\gamma & V_g c\chi c\gamma & -V_g s\chi s\gamma \\ -s\gamma & 0 & -c\gamma \end{bmatrix} \begin{bmatrix} \dot{V}_g \\ \dot{\chi} \\ \dot{\gamma} \end{bmatrix} = \begin{bmatrix} c\psi c\gamma_a & -V_a s\psi c\gamma_a & -V_a c\psi s\gamma_a \\ c\psi c\gamma_a & V_a c\psi c\gamma_a & -V_a s\psi s\gamma_a \\ -s\gamma_a & 0 & -c\gamma_a \end{bmatrix} \begin{bmatrix} \dot{V}_a \\ \dot{\psi} \\ \dot{\gamma}_a \end{bmatrix}$$

- For constant altitude flight and no down component of wind, $\gamma, \gamma_a, \dot{\gamma}, \dot{\gamma}_a, w_d = 0$

$$\dot{V}_g = \frac{\dot{V}_a}{\cos(\chi - \psi)} + V_g \dot{\chi} \tan(\chi - \psi), \qquad \dot{\psi} = \frac{\dot{V}_a}{V_a} \tan(\chi - \psi) + \frac{V_g \dot{\chi}}{V_a \cos(\chi - \psi)}$$

- For constant airspeed, coordinated turn condition

$$\boxed{\dot{\psi} = \frac{V_g \dot{\chi}}{V_a \cos(\chi - \psi)} = \frac{g \tan\phi \cos(\chi - \psi)}{V_a \cos(\chi - \psi)} = \frac{g}{V_a} \tan\phi}$$

- **Equation is true even in the presence of wind.**

## Accelerating climb

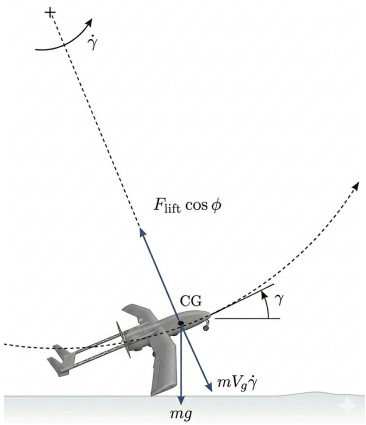


- Pull up maneuver and UAV climbs along an arc
- Due to roll angle $\phi$, the projection of lift force in $\boldsymbol{i}^b - \boldsymbol{k}^b$ plane: $F_{\text{lift}} \cos\phi$
- Force balance equation

$$F_{\text{lift}} \cos\phi = mV_g\dot{\gamma} + mg\cos\gamma$$

$$\dot{\gamma} = \frac{g}{V_g}\left[\frac{F_{\text{lift}}\cos\phi}{mg} - \cos\gamma\right] = \frac{g}{V_g}\left[n_{lf}\cos\phi - \cos\gamma\right]$$

where the load factor $\boxed{\mathrm{n}_{lf} \triangleq \frac{F_{\text{lift}}}{mg}}$

# UAV Kinematic Model of Controlled Flight: Accelerated Climb

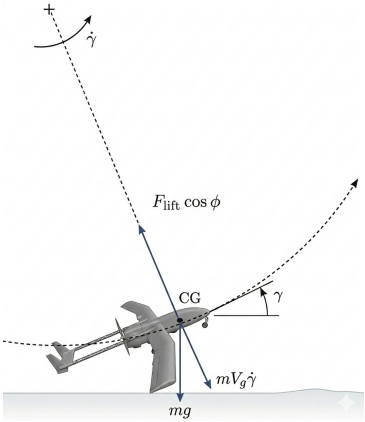


- For wings-level, horizontal flight,

$$\boxed{\phi = \gamma = 0, \quad n_{nf} = 1}$$

- **Load factor**: Representation of the force experienced by aircraft during climbing and turning maneuvers
- Check and flexibility about the commands to UAV within its structural capability
- What would happen to load factor for constant climb conditions?
- For constant climb, $\dot{\gamma} = 0$, $\boxed{n_{lf} = \dfrac{\cos\gamma}{\cos\phi}}$

# UAV Kinematic Guidance Model

- How to obtain a guidance model in the presence of wind?
- Difficult to model wind using a kinematic model, why is it so?
- Presence of wind affects the aerodynamic forces on the UAV.
- These forces are expressed in the dynamic model in terms of $V_a, \alpha, \beta$.
- Velocity vector of the UAV
  - Airspeed, heading, and air-mass-referenced flight-path angle
  - Ground speed, course, and flight-path angle
- Control of **airspeed, course angle, and flight-path angle**
- Compute ground speed, heading, and air-mass-referenced flight path angle using wind triangle
- Do you recall how to compute these quantities?

# UAV Kinematic Guidance Model

**Assumption**: Control of airspeed, altitude, and course angle using the suitable autopilots

**Equations of motion**

$$\dot{p}_n = V_a \cos\psi + w_n$$
$$\dot{p}_e = V_a \sin\psi + w_e$$
$$\ddot{\chi} = b_{\dot{\chi}} \left(\dot{\chi}^c - \dot{\chi}\right) + b_{\chi} \left(\chi^c - \chi\right)$$
$$\ddot{h} = b_{\dot{h}} \left(\dot{h}^c - \dot{h}\right) + b_h \left(h^c - h\right)$$
$$\dot{V}_a = b_{V_a} \left(V_a^c - V_a\right)$$

- **Control inputs**: $h^c, V_a^c, \chi^c$
- Heading angle of UAV, with $\gamma_a = 0$

$$\boxed{\psi = \chi - \sin^{-1}\left[\frac{-w_n \sin\chi + w_e \cos\chi}{V_a}\right]}$$

# UAV Kinematic Guidance Model

- Can we also have some other alternatives for the guidance model?
- Roll angle as the input command of the UAV
- Control of heading angle through the roll angle by using a **coordinated-turn condition**
- **Control inputs**: $h^c, V_a^c, \phi^c$

**Equations of motion**

$$\dot{p}_n = V_a \cos\psi + w_n$$

$$\dot{p}_e = V_a \sin\psi + w_e$$

$$\dot{\psi} = \frac{g}{V_a} \tan\phi$$

$$\ddot{h} = b_{\dot{h}} \left(\dot{h}^c - \dot{h}\right) + b_h \left(h^c - h\right)$$

$$\dot{V}_a = b_{V_a} \left(V_a^c - V_a\right)$$

$$\dot{\phi} = b_\phi \left(\phi^c - \phi\right)$$

# UAV Kinematic Guidance Model

- For longitudinal motion, the altitude is indirectly controlled by flight path angle.
- Flight path angle and course angle are both taken as states as they are referenced in the inertial frame.

**Equations of motion**

$$\dot{p}_n = V_a \cos\psi \cos\gamma_a + w_n, \;\; \dot{p}_e = V_a \sin\psi \cos\gamma_a + w_e$$

$$\dot{h} = V_a \sin\gamma_a - w_d, \;\; \dot{\chi} = \frac{g}{V_g} \tan\phi \cos(\chi - \psi)$$

$$\dot{\gamma} = b_\gamma (\gamma^c - \gamma)$$

$$\dot{V}_a = b_{V_a} (V_a^c - V_a), \;\; \dot{\phi} = b_\phi (\phi^c - \phi)$$

- Control inputs: $\gamma_a^c, V_a^c, \phi^c$
- Other variables computed using these states using the wind triangle relations.

# UAV Kinematic Guidance Model

- Some autopilots control the load factor, rather than the flight path angle
- Use accelerating climb conditions

**Equations of motion**

$$\dot{p}_n = V_a \cos\psi \cos\gamma_a + w_n, \quad \dot{p}_e = V_a \sin\psi \cos\gamma_a + w_e$$

$$\dot{h} = V_a \sin\gamma_a - w_d, \quad \dot{\psi} = \frac{g}{V_a} \tan\phi$$

$$\dot{\gamma} = \frac{g}{V_g}\left(n_{lf} \cos\phi - \cos\gamma\right), \quad \dot{n}_{lf} = b_n \left(n_{lf}^c - n_{lf}\right)$$

$$\dot{V}_a = b_{V_a}\left(V_a^c - V_a\right), \quad \dot{\phi} = b_\phi \left(\phi^c - \phi\right)$$

- **Control inputs**: $n_{lf}^c, V_a^c, \phi^c$
- Other variables $(V_a, \gamma_a, \psi)$ computed using wind triangle relations

# UAV Dynamic Guidance Model

- **Reduced-order guidance models**: Based on kinematic relations between positions and velocities
- Based on first-order differential equations to model the closed-loop response of commanded states
- Advantage of conditions for coordinated turn to eliminate lift force from equations of motion
- Airspeed as a controlled quantity and thus no force balance along body-fixed $\boldsymbol{i}^b$ axis

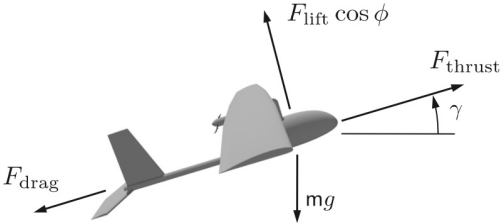

# UAV Dynamic Guidance Model

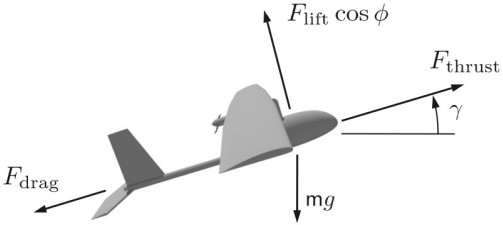


- Using Newton's second law

$$\dot{V}_g = \frac{F_{\text{thrust}}}{m} - \frac{F_{\text{drag}}}{m} - g\sin\gamma$$

- Course angle, using $n_{lf} = \dfrac{\cos\gamma}{\cos\phi} = \dfrac{F_{\text{lift}}}{mg}$, is given by

$$\dot{\chi} = \frac{g}{V_g}\tan\phi\cos(\chi-\psi) = \frac{g\sin\phi\cos(\chi-\psi)}{V_g\cos\gamma}n_{lf} = \frac{F_{\text{lift}}\sin\phi\cos(\chi-\psi)}{mV_g\cos\gamma}$$

# UAV Dynamic Guidance Model

## Equations of motion

$$\dot{p}_n = V_g \cos\chi \cos\gamma, \quad \dot{p}_e = V_g \sin\chi \cos\gamma, \quad \dot{h} = V_g \sin\gamma$$

$$\dot{V}_g = \frac{F_{\text{thrust}}}{m} - \frac{F_{\text{drag}}}{m} - g\sin\gamma$$

$$\dot{\chi} = \frac{F_{\text{lift}} \sin\phi \cos(\chi - \psi)}{m V_g \cos\gamma}, \quad \dot{\gamma} = \frac{F_{\text{lift}}}{m V_g}\cos\phi - \frac{g}{V_g}\cos\gamma$$

- **Lift and drag forces**:

$$L_{\text{lift}} = \frac{1}{2}\rho V_a^2 S C_L, \; D_{\text{lift}} = \frac{1}{2}\rho V_a^2 S C_D, \; C_D = C_{D_0} + K C_L^2$$

- **Control inputs**: Thrust ($F_{\text{thrust}}$), lift coefficient ($C_L$), and bank angle ($\phi$)

# UAV Dynamic Guidance Model

- **Popularity of the point-mass model**: Models aircraft behavior in response to the inputs used by a pilot
- **Control inputs used by the pilot**: Engine thrust, lift from the lifting surfaces, and bank angle
- In the absence of wind, $\boxed{\mathrm{V}_g = V_a,\ \gamma = \gamma_a,\ \chi = \psi}$

**Equations of motion**

$$\dot{p}_n = V_a \cos\psi \cos\gamma, \quad \dot{p}_e = V_a \sin\psi \cos\gamma, \quad \dot{h} = V_a \sin\gamma$$

$$\dot{V}_a = \frac{F_{\text{thrust}}}{m} - \frac{F_{\text{drag}}}{m} - g\sin\gamma$$

$$\dot{\psi} = \frac{F_{\text{lift}} \sin\phi}{m V_a \cos\gamma}, \quad \dot{\gamma} = \frac{F_{\text{lift}}}{m V_a}\cos\phi - \frac{g}{V_a}\cos\gamma$$

# Definitions

## Trajectory Control Problem

To make a vehicle follow a pre-established path in space

- Approaches: Trajectory-tracking controller or Path-following controller

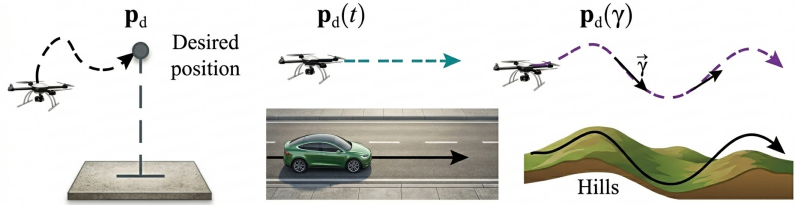


(a) Set-point control (b) Trajectory tracking (c) Path following

- **Trajectory tracking**: A reference path to be tracked specified w.r.t. time
- **Path following**: Problem of following a path without preassigned timing information.

# Definitions

- **Desired path**: A curve in 3D space $\boldsymbol{P}_d(\gamma) := [x_d(\gamma), y_d(\gamma), z_d(\gamma)]^T$ , parameterized by the virtual arc length $\gamma \in [0 \quad \gamma_f]$, where $\gamma_f$ is the total virtual arc length.

**Path Following Problem**

**Control objective**: To design a control law for the vehicle that ensures convergence of the vehicle's position $\boldsymbol{P}(t)$ to the desired path $\boldsymbol{P}_d(\gamma)$.

- Difficulties with small UAVs:
  - Wind makes trajectory tracking approaches difficult, if not infeasible
  - Required precise information on wind at every instant to compute desired airspeed
  - Effect of downwind and upwind on trajectory tracking

# Path Following

## Advantages of Path Following

- Smoother convergence to the path.
- Less demand of control efforts.
- Smaller transient error and strong robustness.
- Control signals less likely to get saturated.

- **Better approach for small UAV**: Path following
- Rather than "follow this trajectory", we control UAV to "stay on this path"
- Objective is to be on the path rather than be at a certain point at particular time.

# Path Following Design Aspects

- **Wind**: Primary challenge in designing a controller for small UAVs
  - Always present to some degree
  - Significant (20–40%) w.r.t. commanded airspeed of UAVs
- **Minimum turn radius**: Order of 10 to 50 m.
  - A fundamental limit on the spatial frequency of paths that can be tracked.
- What kind of path should we aim for when designing controllers of UAVs?
  - Straight line between two points in 3-D
  - Circular orbits or arcs in the horizontal plane
- **Limitations with UAVs**:
  - Capability of UAVs climbing to follow inclined path
  - Turning capability of UAVs to follow orbital path
- What could be possible justifications for targeting these paths?
- A general path can be constructed from these path primitives.
- How to specify the straight-line paths? Possible using two vectors

# Straight-line Path Following

## Straight-line Path

$$\mathcal{P}_{\text{line}}(\boldsymbol{r}, \boldsymbol{q}) = \{\boldsymbol{x} \in \mathbb{R}^3 : \boldsymbol{x} = \boldsymbol{r} + \lambda \boldsymbol{q}, \lambda \in \mathbb{R}\}$$

where $\boldsymbol{r} \in \mathbb{R}^3$ is the origin of path, and $\boldsymbol{q} \in \mathbb{R}^3$ is a unit vector along path.

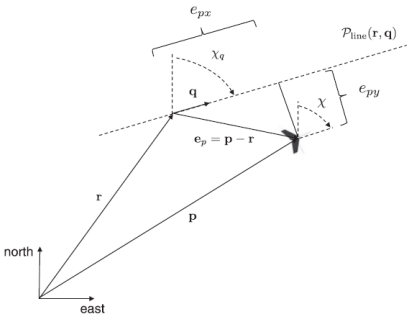


- $\boldsymbol{r}$ : Vector defining initiation (origin) of path
- $\boldsymbol{q}$ : Unit vector defining direction of path
- $\boldsymbol{p}$ : Vector defining current location of vehicle
- $\chi_q$ : Course direction of the path
- $e_{py}$ : Lateral tracking error

$$\boxed{\chi_q \triangleq \tan^{-1}\left(\frac{q_e}{q_n}\right)}$$

# Path following: Straight-line

- **Path following problem**: Better understood in frame relative to straight-line path
- **Center**: $\boldsymbol{r}$ also denoting origin of path frame $\mathcal{P}$
- **Axes**: $x-$axis aligned with projection of $\boldsymbol{q}$ on local NE-plane, $z-$axis aligned with inertial $z-$axis, $y-$axis completes RH system
- What would be the relation between the vectors in these two frames?
- Relative path error, expressed in the path frame

$$\boldsymbol{e}_p = \begin{pmatrix} e_{px} \\ e_{py} \\ e_{pz} \end{pmatrix} \triangleq \mathcal{R}_i^{\mathcal{P}} \left( \boldsymbol{p}^i - \boldsymbol{r}^i \right), \qquad \mathcal{R}_i^{\mathcal{P}} \triangleq \begin{pmatrix} \cos\chi_q & \sin\chi_q & 0 \\ -\sin\chi_q & \cos\chi_q & 0 \\ 0 & 0 & 1 \end{pmatrix}$$

- Dynamics of relative path error in NE inertial plane, expressed in path frame

$$\begin{pmatrix} \dot{e}_{px} \\ \dot{e}_{py} \end{pmatrix} = \begin{pmatrix} \cos\chi_q & \sin\chi_q \\ -\sin\chi_q & \cos\chi_q \end{pmatrix} \begin{pmatrix} V_g \cos\chi \cos\gamma \\ V_g \sin\chi \cos\gamma \end{pmatrix} = \begin{pmatrix} V_g \cos(\chi - \chi_q) \cos\gamma \\ V_g \sin(\chi - \chi_q) \cos\gamma \end{pmatrix}$$

# Straight-line: Lateral Tracking Problem

- How to achieve the path following for UAVs?
- Regulate cross track error $e_{py}$ through selection of desired course angle $\chi_c$

**Relevant Dynamics of Vehicle**

$$\dot{e}_{py} = V_g \sin(\chi - \chi_q)\cos\gamma; \quad \ddot{\chi} = b_{\dot{\chi}}(\dot{\chi}^c - \dot{\chi}) + b_{\chi}(\chi^c - \chi)$$

- What would be the objective of the lateral straight-line path following problem?
- To select $\chi^c$ such that $e_{py} \to 0$, when $\chi_q$ is known.
- How to compute the desired altitude $(h_d)$ of UAVs?
- Projection of relative path error vector onto the vertical plane containing path direction vector $\boldsymbol{q}$ and $\boldsymbol{k}^i$

# Tracking Problem: Longitudinal Plane

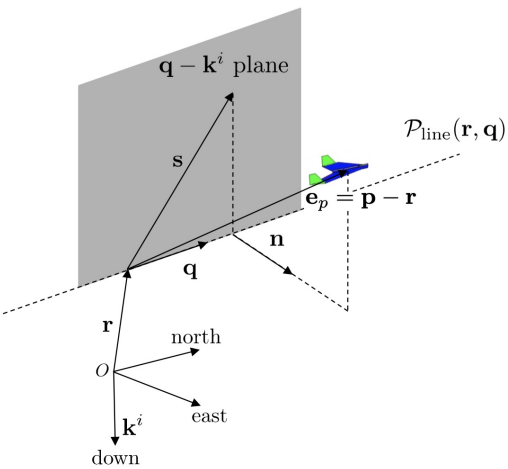


(a)

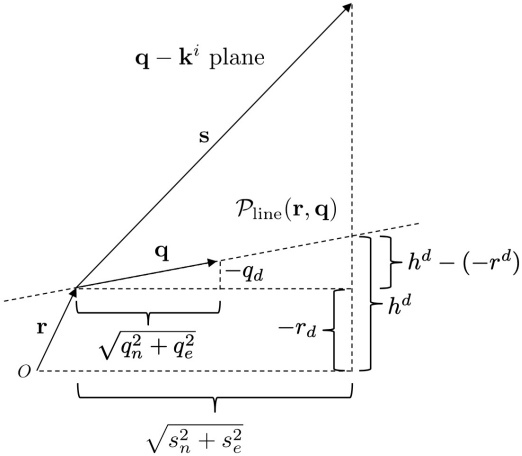


(b)

# Longitudinal Tracking Problem

- Projection of the relative error $\boldsymbol{e}_p$: $\boldsymbol{s}$

$$\boldsymbol{s}^i = \begin{pmatrix} s_n \\ s_e \\ s_d \end{pmatrix} = \boldsymbol{e}_p^i - (\boldsymbol{e}_p^i \cdot \boldsymbol{n})\boldsymbol{n}, \qquad \boldsymbol{e}_p^i = \begin{pmatrix} e_{pn} \\ e_{pe} \\ e_{pd} \end{pmatrix} \triangleq \left(\boldsymbol{p}^i - \boldsymbol{r}^i\right) = \begin{pmatrix} p_n - r_n \\ p_e - r_e \\ p_d - r_d \end{pmatrix}$$

- How to compute the unit vector, $\boldsymbol{n}$, normal to the $\boldsymbol{q}$–$\boldsymbol{k}^i$ plane?

$$\boldsymbol{n} = \frac{\boldsymbol{q} \times \boldsymbol{k}^i}{\|\boldsymbol{q} \times \boldsymbol{k}^i\|}$$

- Using similar triangles

$$\boxed{\frac{h_d + r_d}{\sqrt{s_n^2 + s_e^2}} = \frac{-q_d}{\sqrt{q_n^2 + q_e^2}}}$$

# Longitudinal Tracking Problem

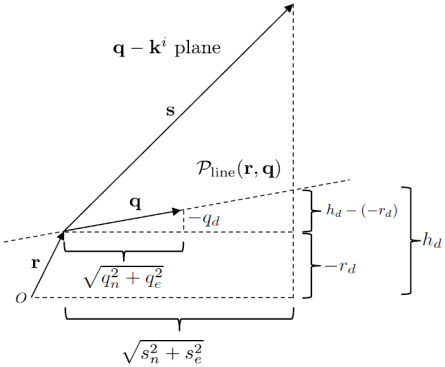


- Desired altitude $h_d \triangleq h_d(\boldsymbol{r}, \boldsymbol{p}, \boldsymbol{q})$

$$h_d = -r_d + \sqrt{s_n^2 + s_e^2}\left[\frac{q_d}{\sqrt{q_n^2 + q_e^2}}\right]$$

- **<u>Altitude dynamics</u>**

$$\ddot{h} = b_{\dot{h}}\left(\dot{h}^c - \dot{h}\right) + b_h\left(h^c - h\right)$$

- **Objective of straight-line path following**: To select $h^c$ so that $h \to h_d(\boldsymbol{r}, \boldsymbol{p}, \boldsymbol{q})$.
- Can we use our previous altitude controller design? Yes
- With $h_c = h_d(\boldsymbol{r}, \boldsymbol{p}, \boldsymbol{q})$, a successful path-following with zero steady-state error in altitude for straight-line paths.

# Longitudinal Guidance Strategy for Straight-line Following

- **Altitude-hold zone**: Use of pitch attitude to control the vehicle's altitude
- Outer loop dynamics for altitude channel, using the successive loop design

$$\frac{h(s)}{h^c(s)} = \frac{b_{\dot{h}}s + b_h}{s^2 + b_{\dot{h}}s + b_h}$$

- **Altitude error**:
  $e_h \triangleq h_d(\boldsymbol{r}, \boldsymbol{p}, \boldsymbol{q}) - h = h^c - h$
- How to check if the vehicle can follow straight-line paths?

- Altitude error in terms of $h^c$

$$e_h(s) = \left(1 - \frac{h(s)}{h^c(s)}\right) h^c(s)$$
$$= \left(\frac{s^2}{s^2 + b_{\dot{h}}s + b_h}\right) h^c(s)$$

- How to obtain the steady-state error of altitude of the vehicle?
- Applying the final value theorem

$$e_{h,ss} = \lim_{s \to 0} s \left[\frac{s^2}{s^2 + b_{\dot{h}}s + b_h}\right] h^c(s)$$

# Longitudinal Guidance Strategy for Straight-line Following

- What can we say about the steady-state errors in UAV's altitude?

$$e_{h,ss} = \lim_{s \to 0} \left[ \frac{s^3}{s^2 + b_{\dot{h}} s + b_h} \right] h^c(s) = 0 \quad \text{for } h^c = \frac{H_0}{s}, \frac{H_0}{s^2}$$

- Perfect tracking for constant and ramp inputs
- Constant disturbances are rejected
- Tracking of constant altitude and inclined straight-line paths, with zero steady-state altitude error
- **Assumption**: Sufficient physical capabilities of the UAVs
- Tracking in the longitudinal plane is now guaranteed.
- How to ensure the tracking in the lateral direction of UAVs?

# Lateral Guidance Strategy for Straight-line Following

- **Objective of lateral PF**: To select a commanded course angle $(\chi^c)$ s.t. $e_{py} \to 0$
- **Strategy**: To construct a desired course angle at every point relative to a straight-line path that results in UAV moving toward the path

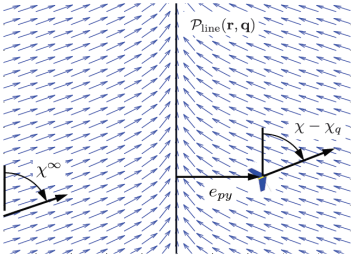


A set of desired course angles at every point will be called **vector field (VF)** because the desired course angle specifies a vector (relative to the straight line) with a magnitude of unity.

- Objectives of VF construction
  - For large $e_{py}$,

$$\chi_d \to \chi^\infty \in (0, \pi/2]$$

  - For $e_{py} \to 0$, $\chi_d \to 0$

# Lateral Guidance Strategy for Straight-line Following

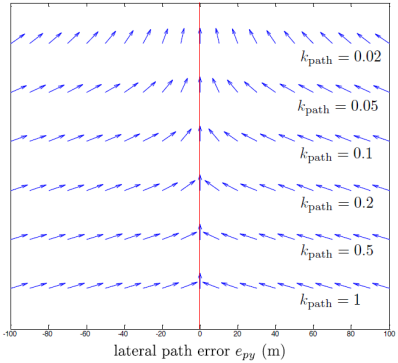


- Desired course of the UAV

$$\chi_d(e_{py}) = -\chi^\infty \frac{2}{\pi} \tan^{-1}(k_{\text{path}} e_{py})$$

- $k_{\text{path}} > 0$ influences the rate of the transition of $\chi_d$ from $\chi^\infty$ to zero
- How does it affect the transition?
- $k_{\text{path}}$ large $\rightarrow$ Short, abrupt transition
- $k_{\text{path}}$ small $\rightarrow$ Long, gradual transition

- **Rule of thumb**: $k_{\text{path}} \approx \dfrac{1}{R_{\text{min}}}$ where $R_{\text{min}}$ is the minimum turn radius.

Randal Beard and Timothy W. McLain, "Small Unmanned Aircraft: Theory and Practice", Princeton University Press, 2012.