Guidance and Control of Unmanned Autonomous Vehicles

Shashi Ranjan Kumar

Associate Professor
Department of Aerospace Engineering
Indian Institute of Technology Bombay
Powai, Mumbai- 400076

https://www.aero.iitb.ac.in/~shashi
srk@aero.iitb.ac.in

Unmanned Autonomous Vehicles: Coordinate Frame

- Aerodynamic forces are generated as the airframe moves through the air surrounding it.
- **Airspeed vector ($\boldsymbol{V}_a$)**: Velocity of the aircraft relative to the surrounding air
- To generate lift, the wings of the airframe must fly at a positive angle (angle of attack α) with respect to $\boldsymbol{V}_a$ (considering symmetric airfoil).

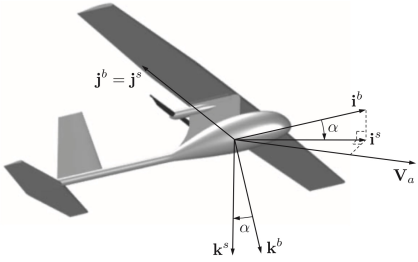

Transformation from $\mathcal{F}^b$ to $\mathcal{F}^s$: Left handed rotation by α

$$\boldsymbol{p}^s = \mathcal{R}_b^s(\alpha)\boldsymbol{p}^b, \quad \mathcal{R}_b^s(\alpha) = \begin{pmatrix} \cos\alpha & 0 & \sin\alpha \\ 0 & 1 & 0 \\ -\sin\alpha & 0 & \cos\alpha \end{pmatrix}$$

Unmanned Autonomous Vehicles: Coordinate Frame

- **Sideslip angle (β)**: Angle between airspeed vector and $\boldsymbol{i}^b - \boldsymbol{k}^b$ plane
- **Wind frame**: Rotation of the stability frame by a right-handed rotation of β about $\boldsymbol{k}^s$
- Unit vector $\boldsymbol{i}^w$ aligned with airspeed vector $\boldsymbol{V}_a$

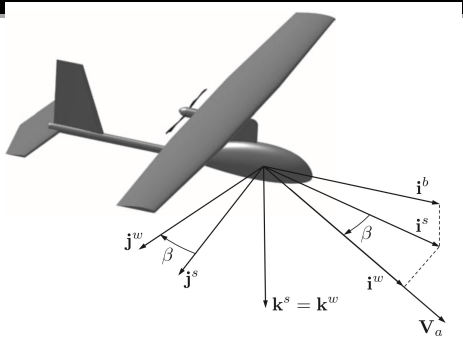

Transformation from $\mathcal{F}^s$ to $\mathcal{F}^w$

$$\boldsymbol{p}^w = \mathcal{R}_s^w(\beta)\boldsymbol{p}^s; \quad \mathcal{R}_s^w(\beta) = \begin{pmatrix} \cos\beta & \sin\beta & 0 \\ -\sin\beta & \cos\beta & 0 \\ 0 & 0 & 1 \end{pmatrix}$$

Unmanned Autonomous Vehicles: Coordinate Frame

Body axes system: Any set of axes fixed to a vehicle and moving with it.

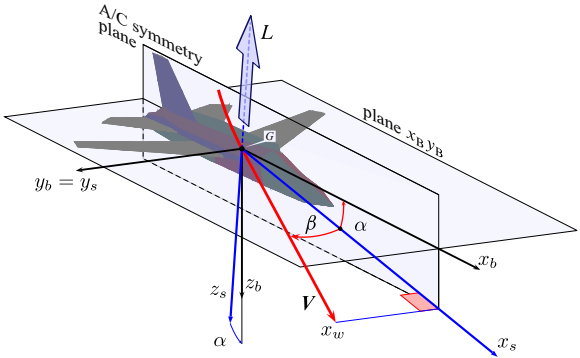

- **Origin**: CG location of vehicle
- Ox_bz_b coincides with the plane of symmetry
- Ox_b axis along the longitudinal centerline or zero-lift line
- Oy_b axis $\perp$ towards right side, Oz_b axis downward to complete RH system
- Special cases of body axes system: Stability and Wind axes systems

Unmanned Autonomous Vehicles: Coordinate Frame

- **Stability axes system**: $Ox_s y_s z_s$
  - Ox_s lies in plane of symmetry (PoS)
  - For $\beta = 0$, Ox_s points in opposite direction of relative wind
  - For $\beta \neq 0$, Ox_s chosen to coincide the projection of relative wind in PoS
  - $Oy_s \perp$ PoS towards right side and Oz_s downward to complete RH system
  - How to locate stability axes w.r.t. body axes? Angle of attack
  - What would be the direction of D and L for $\beta = 0$? Opposite to Ox_s and Oz_s

- **Wind axes system**: $Ox_w y_w z_w$
  - Ox_w points in opposite direction of relative wind
  - Oz_w lies in PoS
  - $Oy_s \perp Ox_w z_w$ towards right side
  - For $\beta \neq 0$, $Ox_w z_w$ will not coincide with PoS
  - How to locate wind axes w.r.t. body axes?Angle of attack and sideslip angle
  - What would be the direction of drag and lift? Opposite to Ox_w and Oz_w

Unmanned Autonomous Vehicles: Coordinate Frame

Total transformation from the body frame to the wind frame

$$\mathcal{R}_b^w(\alpha,\beta) = \mathcal{R}_s^w(\beta)\mathcal{R}_b^s(\alpha)$$

$$= \begin{bmatrix} \cos\beta & \sin\beta & 0 \\ -\sin\beta & \cos\beta & 0 \\ 0 & 0 & 1 \end{bmatrix} \begin{bmatrix} \cos\alpha & 0 & \sin\alpha \\ 0 & 1 & 0 \\ -\sin\alpha & 0 & \cos\alpha \end{bmatrix} = \begin{bmatrix} \mathsf{c}_\beta\mathsf{c}_\alpha & \mathsf{s}_\beta & \mathsf{c}_\beta\mathsf{s}_\alpha \\ -\mathsf{s}_\beta\mathsf{c}_\alpha & \mathsf{c}_\beta & -\mathsf{s}_\beta\mathsf{s}_\alpha \\ -\mathsf{s}_\alpha & 0 & \mathsf{c}_\alpha \end{bmatrix}$$

Transformation from the wind frame to the body frame

$$\mathcal{R}_w^b(\alpha,\beta) = \mathcal{R}_b^w(\alpha,\beta)^\top = \begin{bmatrix} \mathsf{c}_\beta\mathsf{c}_\alpha & -\mathsf{s}_\beta\mathsf{c}_\alpha & -\mathsf{s}_\alpha \\ \mathsf{s}_\beta & \mathsf{c}_\beta & 0 \\ \mathsf{c}_\beta\mathsf{s}_\alpha & -\mathsf{s}_\beta\mathsf{s}_\alpha & \mathsf{c}_\alpha \end{bmatrix}$$

Wind Triangle: Airspeed, Wind Speed, and Ground Speed

- **Inertial forces experienced by vehicle**: Dependent on velocities and accelerations relative to a fixed (inertial) reference frame
- **Aerodynamic forces**: Depend on the velocity of the airframe relative to the surrounding air.
- **Airspeed ($\boldsymbol{V}_a$)**: Velocity of UAV with respect to the surrounding air
- **Ground speed ($\boldsymbol{V}_g$)**: Velocity of UAV with respect to the inertial frame

$$\boxed{\boldsymbol{V}_a = \boldsymbol{V}_g - \boldsymbol{V}_w}$$

- For $\boldsymbol{V}_w = \boldsymbol{0}$, both velocities are the same.
- Velocity of UAV w.r.t. inertial frame, $\boldsymbol{V}_g$, expressed in body frame

$$\boldsymbol{V}_g^b = \begin{bmatrix} u & v & w \end{bmatrix}^\top$$

Airspeed, Wind Speed, and Ground Speed

- If north, east, and down components of wind are w_n, w_e, w_d, then

$$\boldsymbol{V}_w^b = \begin{pmatrix} u_w \\ v_w \\ w_w \end{pmatrix} = R_v^b(\phi, \theta, \psi) \begin{pmatrix} w_n \\ w_e \\ w_d \end{pmatrix}$$

- If body frame components of airspeed is u_r, v_r, w_r then in body frame

$$\boldsymbol{V}_a^b = \begin{pmatrix} u_r \\ v_r \\ w_r \end{pmatrix} = \begin{pmatrix} u - u_w \\ v - v_w \\ w - w_w \end{pmatrix}$$

- For MAV simulation, $u_r, v_r,$ and w_r are used to calculate the aerodynamic forces and moments acting on the MAV.
- Body-frame velocity components $(u,\ v,\ w)$: States of the MAV system
- Wind velocity components (u_w, v_w, w_w): A wind model

Airspeed, Wind Speed, and Ground Speed

- If velocity of UAV is $\boldsymbol{V}_a$ w.r.t. wind then in the wind frame

$$\boldsymbol{V}_a^w = \begin{pmatrix} V_a & 0 & 0 \end{pmatrix}^\top$$

- Airspeed vector body-frame components

$$\boldsymbol{V}_a^b = \begin{pmatrix} u_r & v_r & w_r \end{pmatrix}^\top = \mathcal{R}_w^b \begin{pmatrix} V_a & 0 & 0 \end{pmatrix}^\top$$

$$= \begin{pmatrix} \mathsf{c}_\beta \mathsf{c}_\alpha & -\mathsf{s}_\beta \mathsf{c}_\alpha & -\mathsf{s}_\alpha \\ \mathsf{s}_\beta & \mathsf{c}_\beta & 0 \\ \mathsf{c}_\beta \mathsf{s}_\alpha & -\mathsf{s}_\beta \mathsf{s}_\alpha & \mathsf{c}_\alpha \end{pmatrix} \begin{pmatrix} V_a \\ 0 \\ 0 \end{pmatrix} = \begin{pmatrix} \cos\alpha\cos\beta \\ \sin\beta \\ \cos\beta\sin\alpha \end{pmatrix} V_a$$

- Inverse relations

$$V_a = \sqrt{u_r^2 + v_r^2 + w_r^2}, \qquad \alpha = \tan^{-1}\left[\frac{w_r}{u_r}\right], \quad \beta = \sin^{-1}\left[\frac{v_r}{\sqrt{u_r^2 + v_r^2 + w_r^2}}\right]$$

Airspeed, Wind Speed, and Ground Speed

- For MAVs, the wind speed is often in the range of 20 - 50% of the airspeed, unlike a large aircraft.
- Significant effect of wind on MAVs as compared to larger conventional aircraft
- **Airspeed vector** $\boldsymbol{V}_a$: Direction the vehicle is traveling with respect to the surrounding air mass.
- **Ground speed vector** $\boldsymbol{V}_g$: Direction the vehicle is traveling with respect to the ground.
- Wind triangle:

$$\boxed{\boldsymbol{V}_a = \boldsymbol{V}_g - \boldsymbol{V}_w}$$

- How to specify the direction of the ground speed vector relative to an inertial frame?
- **Course angle and flight path angle of UAV**

Unmanned Autonomous Vehicles: Wind Triangle

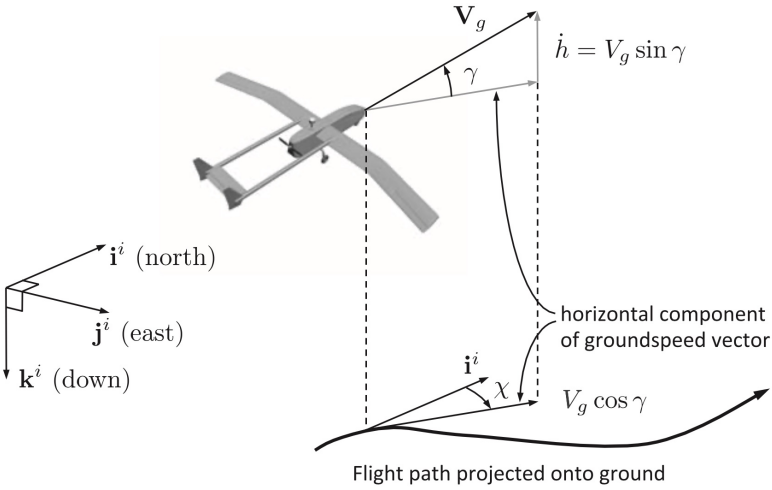

- Course angle (χ): Angle between the projection of the ground velocity vector $\boldsymbol{V}_g$ onto the horizontal plane and true north
- Flight path angle (γ): Angle between the horizontal plane and the ground velocity vector $\boldsymbol{V}_g$

Unmanned Autonomous Vehicles: Wind Triangle

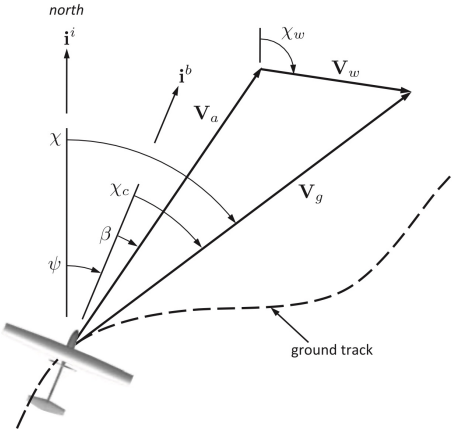

- Heading (yaw) angle (ψ): Angle between $\boldsymbol{i}^i$ and $\boldsymbol{i}^b$
- It defines the direction that vehicle is pointed.
- In steady, level flight, $\boldsymbol{V}_a \to \boldsymbol{i}^b$, and sideslip angle $\beta = 0$.
- Course angle (χ): Angle between inertial north and inertial velocity vector projected onto local north-east plane.
- Crab angle (χ_c): Difference between course and heading angles

$\boldsymbol{i}^i$ vector: North direction

$\boldsymbol{i}^b$ vector: Direction where the vehicle

$$\chi_c \triangleq \chi - \psi$$

Unmanned Autonomous Vehicles: Wind Triangle

- What would be crab angle if there is no wind?
- Zero for $\beta = 0$
- Wind triangle projected onto the vertical plane

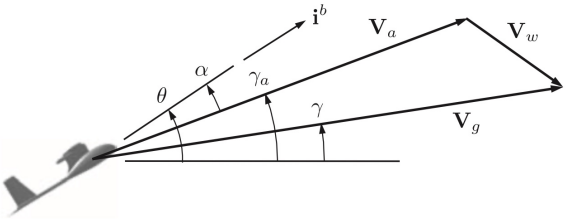

- **Air-mass-referenced flight-path angle (γ_a)**: Angle from inertial north-east plane to $\boldsymbol{V}_a$ in presence of down wind.
- Relation between γ_a, θ, and α

$$\boxed{\gamma_a = \theta - \alpha}$$

- What if there is no wind present?

$$\boxed{\gamma_a = \gamma}$$

Unmanned Autonomous Vehicles: Wind Triangle

Ground speed vector in the inertial frame

$$\boldsymbol{V}_g^i = \begin{bmatrix} \cos\chi & -\sin\chi & 0 \\ \sin\chi & \cos\chi & 0 \\ 0 & 0 & 1 \end{bmatrix} \begin{bmatrix} \cos\gamma & 0 & \sin\gamma \\ 0 & 1 & 0 \\ -\sin\gamma & 0 & \cos\gamma \end{bmatrix} \begin{bmatrix} V_g \\ 0 \\ 0 \end{bmatrix} = \begin{bmatrix} \cos\chi\cos\gamma \\ \sin\chi\cos\gamma \\ -\sin\gamma \end{bmatrix} V_g$$

Airspeed vector in the inertial frame

$$\boldsymbol{V}_a^i = \begin{bmatrix} \cos\psi & -\sin\psi & 0 \\ \sin\psi & \cos\psi & 0 \\ 0 & 0 & 1 \end{bmatrix} \begin{bmatrix} \cos\gamma_a & 0 & \sin\gamma_a \\ 0 & 1 & 0 \\ -\sin\gamma_a & 0 & \cos\gamma_a \end{bmatrix} \begin{bmatrix} V_a \\ 0 \\ 0 \end{bmatrix} = \begin{bmatrix} \cos\psi\cos\gamma_a \\ \sin\psi\cos\gamma_a \\ -\sin\gamma_a \end{bmatrix} V_a$$

Unmanned Autonomous Vehicles: Wind Triangle

- Wind triangle in component form

$$\begin{pmatrix} \cos\chi\cos\gamma \\ \sin\chi\cos\gamma \\ -\sin\gamma \end{pmatrix} V_g - \begin{pmatrix} w_n \\ w_e \\ w_d \end{pmatrix} = \begin{pmatrix} \cos\psi\cos\gamma_a \\ \sin\psi\cos\gamma_a \\ -\sin\gamma_a \end{pmatrix} V_a$$

- Relationships among different variables involved.
- Taking the squared norm of both sides

$$V_g^2 - 2V_g \begin{bmatrix} \cos\chi\cos\gamma & \sin\chi\cos\gamma & -\sin\gamma \end{bmatrix} \begin{bmatrix} w_n \\ w_e \\ w_d \end{bmatrix} + V_w^2 - V_a^2 = 0$$

- Given χ, γ, and wind, one can obtain either V_a or V_g, depending on requirements
- Positive root consideration for V_g
- How to obtain γ_a and ψ given γ, V_a, and V_g?

Unmanned Autonomous Vehicles: Wind Triangle

- For known V_a and V_g, $\boxed{\gamma_a = \sin^{-1}\left(\frac{V_g \sin\gamma + w_d}{V_a}\right)}$
- On multiplying with $\begin{pmatrix} -\sin\chi & \cos\chi & 0 \end{pmatrix}$

$$V_a \cos\gamma_a \left(-\sin\chi\cos\psi + \cos\chi\sin\psi\right) - w_n \sin\chi + w_e \cos\chi = 0$$

$$\implies V_a \cos\gamma_a \sin\left(\psi - \chi\right) - w_n \sin\chi + w_e \cos\chi = 0$$

- On solving above equation, we get

$$\boxed{\psi = \chi - \sin^{-1}\left(\frac{-w_n \sin\chi + w_e \cos\chi}{V_a \cos\gamma_a}\right)}$$

- Computation of χ, γ from known ψ, γ_a
- For negligible wind $(V_w \approx 0)$ and $\beta = 0$,

$$V_g = V_a, u = u_r, v = v_r, w = w_r, \psi = \chi, \gamma = \gamma_a$$

Unmanned Autonomous Vehicles: Coordinate Frame

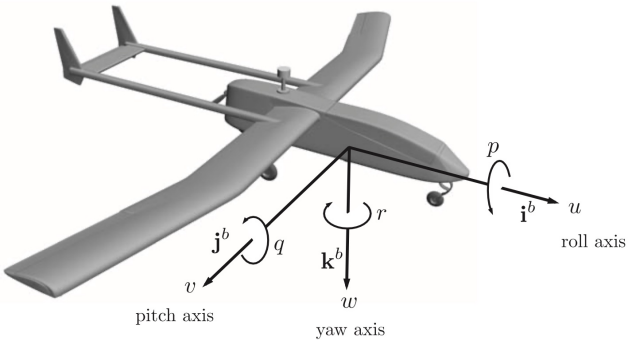

Name	*Description*
p_n	Inertial north position of the MAV along $\mathbf{i}^i$ in $\mathcal{F}^i$
p_e	Inertial east position of the MAV along $\mathbf{j}^i$ in $\mathcal{F}^i$
p_d	Inertial down position (negative of altitude) of the MAV measured along $\mathbf{k}^i$ in $\mathcal{F}^i$
u	Body frame velocity measured along $\mathbf{i}^b$ in $\mathcal{F}^b$
v	Body frame velocity measured along $\mathbf{j}^b$ in $\mathcal{F}^b$
w	Body frame velocity measured along $\mathbf{k}^b$ in $\mathcal{F}^b$
ϕ	Roll angle defined with respect to $\mathcal{F}^{v2}$
θ	Pitch angle defined with respect to $\mathcal{F}^{v1}$
ψ	Heading (yaw) angle defined with respect to $\mathcal{F}^v$
p	Roll rate measured along $\mathbf{i}^b$ in $\mathcal{F}^b$
q	Pitch rate measured along $\mathbf{j}^b$ in $\mathcal{F}^b$
r	Yaw rate measured along $\mathbf{k}^b$ in $\mathcal{F}^b$

Unmanned Autonomous Vehicles: Kinematics

- Translational velocity of the vehicle
  - Velocity components along each of the axes in a body-fixed coordinate frame
  - Inertial velocity of the vehicle projected onto the $\boldsymbol{i}^b, \boldsymbol{j}^b$, and $\boldsymbol{k}^b$ axes
- Translational position of the vehicle: Inertial reference frame
- How to relate the translational position and the velocity of UAV?

$$\begin{pmatrix} \dot{p}_n \\ \dot{p}_e \\ \dot{p}_d \end{pmatrix} = \mathcal{R}_b^v \begin{pmatrix} u \\ v \\ w \end{pmatrix} = \left(\mathcal{R}_v^b\right)^\top \begin{pmatrix} u \\ v \\ w \end{pmatrix}$$

$$\begin{pmatrix} \dot{p}_n \\ \dot{p}_e \\ \dot{p}_d \end{pmatrix} = \begin{pmatrix} \mathsf{C}_\theta \mathsf{C}_\psi & \mathsf{S}_\phi \mathsf{S}_\theta \mathsf{C}_\psi - \mathsf{C}_\phi \mathsf{S}_\psi & \mathsf{C}_\phi \mathsf{S}_\theta \mathsf{C}_\psi + \mathsf{S}_\phi \mathsf{S}_\psi \\ \mathsf{C}_\theta \mathsf{S}_\psi & \mathsf{S}_\phi \mathsf{S}_\theta \mathsf{S}_\psi + \mathsf{C}_\phi \mathsf{C}_\psi & \mathsf{C}_\phi \mathsf{S}_\theta \mathsf{S}_\psi - \mathsf{S}_\phi \mathsf{C}_\psi \\ -\mathsf{S}_\theta & \mathsf{S}_\phi \mathsf{C}_\theta & \mathsf{C}_\phi \mathsf{C}_\theta \end{pmatrix} \begin{pmatrix} u \\ v \\ w \end{pmatrix}$$

Unmanned Autonomous Vehicles: Kinematics

- Euler angles are defined relative to intermediate frames of reference.
- Angular rates (p, q, r) are not same as Euler angle rates.

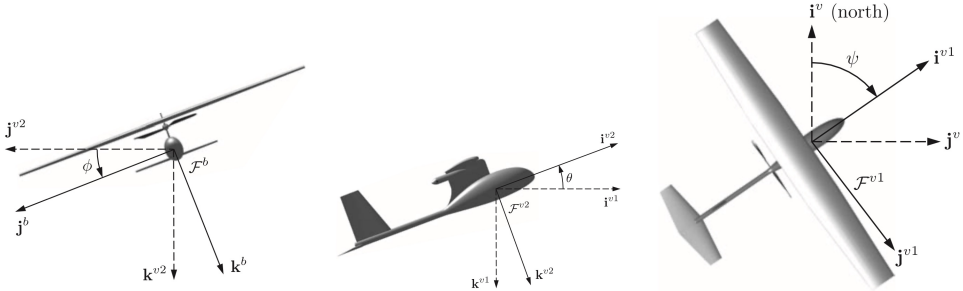

- Roll angle ϕ is a rotation from $\mathcal{F}^{v2}$ to $\mathcal{F}^b$ about the $\boldsymbol{i}^{v2} = \boldsymbol{i}^b$ axis
- Pitch angle θ is a rotation from $\mathcal{F}^{v1}$ to $\mathcal{F}^{v2}$ about the $\boldsymbol{j}^{v1} = \boldsymbol{j}^{v2}$ axis
- Yaw angle ψ is a rotation from $\mathcal{F}^v$ to $\mathcal{F}^{v1}$ about the $\boldsymbol{k}^v = \boldsymbol{k}^{v1}$ axis

Unmanned Autonomous Vehicles: Kinematics

- Body-frame angular rates in terms of Euler angle rates

$$
\begin{aligned}
\begin{pmatrix} p \\ q \\ r \end{pmatrix} &= \begin{pmatrix} \dot{\phi} \\ 0 \\ 0 \end{pmatrix} + \mathcal{R}^{b}_{v2}(\phi) \begin{pmatrix} 0 \\ \dot{\theta} \\ 0 \end{pmatrix} + \mathcal{R}^{b}_{v2}(\phi)\mathcal{R}^{v2}_{v1}(\theta) \begin{pmatrix} 0 \\ 0 \\ \dot{\psi} \end{pmatrix} \\
&= \begin{pmatrix} \dot{\phi} \\ 0 \\ 0 \end{pmatrix} + \begin{pmatrix} 1 & 0 & 0 \\ 0 & \cos\phi & \sin\phi \\ 0 & -\sin\phi & \cos\phi \end{pmatrix} \begin{pmatrix} 0 \\ \dot{\theta} \\ 0 \end{pmatrix} \\
&\quad + \begin{pmatrix} 1 & 0 & 0 \\ 0 & \cos\phi & \sin\phi \\ 0 & -\sin\phi & \cos\phi \end{pmatrix} \begin{pmatrix} \cos\theta & 0 & -\sin\theta \\ 0 & 1 & 0 \\ \sin\theta & 0 & \cos\theta \end{pmatrix} \begin{pmatrix} 0 \\ 0 \\ \dot{\psi} \end{pmatrix}
\end{aligned}
$$

- Note the independence of the above relation with respect to angle ψ

Unmanned Autonomous Vehicles: Kinematics

Body-frame angular rates in terms of Euler angle rates

$$\begin{pmatrix} p \\ q \\ r \end{pmatrix} = \begin{pmatrix} 1 & 0 & -\sin\theta \\ 0 & \cos\phi & \sin\phi\cos\theta \\ 0 & -\sin\phi & \cos\phi\cos\theta \end{pmatrix} \begin{pmatrix} \dot{\phi} \\ \dot{\theta} \\ \dot{\psi} \end{pmatrix}$$

Euler angle rates in terms of body-frame angular rates

$$\begin{pmatrix} \dot{\phi} \\ \dot{\theta} \\ \dot{\psi} \end{pmatrix} = \begin{pmatrix} 1 & \sin\phi\tan\theta & \cos\phi\tan\theta \\ 0 & \cos\phi & -\sin\phi \\ 0 & \sin\phi\sec\theta & \cos\phi\sec\theta \end{pmatrix} \begin{pmatrix} p \\ q \\ r \end{pmatrix}$$

- Under what conditions, Euler angle rates and body rates become equal?
- For $\phi = \theta = 0$,

$$\begin{bmatrix} \dot{\phi} \\ \dot{\theta} \\ \dot{\psi} \end{bmatrix} = \begin{bmatrix} p \\ q \\ r \end{bmatrix}$$

Unmanned Autonomous Vehicles: Dynamics

- Dynamics using Newton's laws, that hold true only in inertial reference frames
- Motion of the body of interest must be referenced to a fixed (i.e., inertial) frame of reference, (ground in our case).
- Flat earth model, appropriate for small and miniature air vehicles
- Newton's second law (translational motion)

$$\boxed{m\frac{d\boldsymbol{V}_g}{dt_i} = \boldsymbol{f}}$$

m: Mass of the vehicle, $\frac{d}{dt_i}$: Derivative w.r.t. inertial frame, $\boldsymbol{f}$: Sum of all external forces acting on vehicle

- What are the possible external forces? Gravity, aerodynamic and propulsion forces

Unmanned Autonomous Vehicles: Dynamics

- Using Transport Theorem between inertial and body frames

$$\boxed{\frac{d\boldsymbol{V}_g}{dt_i} = \frac{d\boldsymbol{V}_g}{dt_b} + \boldsymbol{\omega}_{b/i} \times \boldsymbol{V}_g}$$

where $\boldsymbol{\omega}_{b/i}$ is the angular velocity of vehicle w.r.t. the inertial frame.

- Newton's second law in terms of derivative in body frame

$$\boxed{m\left(\frac{d\boldsymbol{V}_g}{dt_b} + \boldsymbol{\omega}_{b/i} \times \boldsymbol{V}_g\right) = \boldsymbol{f}}$$

- Newton's second law in terms of forces and velocities in body frame

$$\boxed{m\left(\frac{d\boldsymbol{V}_g^b}{dt_b} + \boldsymbol{\omega}_{b/i}^b \times \boldsymbol{V}_g^b\right) = \boldsymbol{f}^b}$$

- What are these vectors $(\boldsymbol{V}_g^b, \boldsymbol{\omega}_{b/i}^b, \boldsymbol{f}^b)$?

Unmanned Autonomous Vehicles: Dynamics

- $\dfrac{d\boldsymbol{V}_g^b}{dt_b}$: Rate of change of velocity expressed in the body frame, as viewed by an observer on the moving body.
- As u, v, w are the instantaneous projections of $\boldsymbol{V}_g^b$ onto body axes,

$$\frac{d\boldsymbol{V}_g^b}{dt_b} = \begin{bmatrix} \dot{u} & \dot{v} & \dot{w} \end{bmatrix}^\top$$

- Translational motion equations

$$\boxed{m\left(\frac{d\boldsymbol{V}_g^b}{dt_b} + \boldsymbol{\omega}_{b/i}^b \times \boldsymbol{V}_g^b\right) = \boldsymbol{f}^b}$$

$$\frac{d\boldsymbol{V}_g^b}{dt_b} = \frac{\boldsymbol{f}^b}{m} - \boldsymbol{\omega}_{b/i}^b \times \boldsymbol{V}_g^b \implies \begin{bmatrix} \dot{u} \\ \dot{v} \\ \dot{w} \end{bmatrix} = \begin{bmatrix} rv - qw \\ pw - ru \\ qu - pv \end{bmatrix} + \frac{1}{m}\begin{bmatrix} f_x \\ f_y \\ f_z \end{bmatrix}$$

Unmanned Autonomous Vehicles: Dynamics

- Newton's second law (rotational motion)

$$\boxed{\frac{d\boldsymbol{h}}{dt_i} = \boldsymbol{m}}$$

$\boldsymbol{h}$: Angular momentum in vector form

$\boldsymbol{m}$: Sum of all externally applied moments

- Is the above expression true for the moments about any point?
- No, true only when moments are summed about the center of mass of the vehicle.
- Derivative of angular momentum, taken in the inertial frame

$$\boxed{\frac{d\boldsymbol{h}}{dt_i} = \frac{d\boldsymbol{h}}{dt_b} + \boldsymbol{\omega}_{b/i} \times \boldsymbol{h} = \boldsymbol{m}}$$

Unmanned Autonomous Vehicles: Dynamics

- Newton's second law (rotational motion) in body frame

$$\boxed{\frac{d\boldsymbol{h}^b}{dt_b} + \boldsymbol{\omega}_{b/i}^b \times \boldsymbol{h}^b = \boldsymbol{m}^b}$$

- How to compute angular momentum of a rigid body?
- **Angular momentum**: Product of inertia matrix $\boldsymbol{J}$ and angular velocity $\boldsymbol{\omega}_{b/i}^b$

$$\boldsymbol{h}^b = \boldsymbol{J}\boldsymbol{\omega}_{b/i}^b$$

$$\boldsymbol{J} = \begin{bmatrix} \int(y^2+z^2)dm & -\int xydm & -\int xzdm \\ -\int xydm & \int(x^2+z^2)dm & -\int yzdm \\ -\int xzdm & -\int yzdm & \int(x^2+y^2)dm \end{bmatrix} \triangleq \begin{bmatrix} J_x & -J_{xy} & -J_{xz} \\ -J_{xy} & J_y & -J_{yz} \\ -J_{xz} & -J_{yz} & J_z \end{bmatrix}$$

Unmanned Autonomous Vehicles: Dynamics

- **Diagonal and off-diagonal terms**: Moments and Products of inertia, respectively
- **Moment of inertia**: Measure of the aircraft's tendency to oppose acceleration about a specific axis of rotation.
- **Interpretation of** J_x: Sum of the product of the mass of each element and the square of the distance of the mass element from the body x axis, $(y^2 + z^2)$, and adding them up.
- Larger J_x, aircraft opposes angular acceleration about x-axis more.
- How to obtain the inertia matrix?
- Numerically from mass properties using CAD models or measured experimentally using the equipment.

Unmanned Autonomous Vehicles: Dynamics

- Is there any benefit of using body axes for the inertia matrix computation?
- Yes, it simplifies the equations of motion. How?
- Inertia matrix $\boldsymbol{J}$ is constant when viewed from the body frame, thus $\dot{\boldsymbol{J}} = 0$.
- As p, q, r are instantaneous components of angular velocity $\boldsymbol{\omega}_{b/i}^{b}$ along body axes,

$$\dot{\boldsymbol{\omega}}_{b/i} = \frac{d\boldsymbol{\omega}_{b/i}^{b}}{dt_b} = \begin{bmatrix} \dot{p} \\ \dot{q} \\ \dot{r} \end{bmatrix}$$

- Equations of rotational motion

$$\boldsymbol{J}\frac{d\boldsymbol{\omega}_{b/i}^{b}}{dt_b} + \boldsymbol{\omega}_{b/i}^{b} \times \left(\boldsymbol{J}\boldsymbol{\omega}_{b/i}^{b}\right) = \boldsymbol{m}^{b} \implies \boxed{\frac{d\boldsymbol{\omega}_{b/i}^{b}}{dt_b} = \boldsymbol{J}^{-1}\left\{-\boldsymbol{\omega}_{b/i}^{b} \times \left(\boldsymbol{J}\boldsymbol{\omega}_{b/i}^{b}\right) + \boldsymbol{m}^{b}\right\}}$$

Unmanned Autonomous Vehicles: Dynamics

- Due to the symmetric nature of aircraft about $\boldsymbol{i}^b$-$\boldsymbol{k}^b$ plane

$$\boldsymbol{J} = \begin{pmatrix} J_x & 0 & -J_{xz} \\ 0 & J_y & 0 \\ -J_{xz} & 0 & J_z \end{pmatrix}$$

- Inverse of inertia matrix

$$\boldsymbol{J}^{-1} = \frac{\text{adj}(\boldsymbol{J})}{\det(\boldsymbol{J})} = \frac{1}{J_y(J_xJ_z - J_{xz}^2)} \begin{pmatrix} J_yJ_z & 0 & J_yJ_{xz} \\ 0 & J_xJ_z - J_{xz}^2 & 0 \\ J_{xz}J_y & 0 & J_xJ_y \end{pmatrix}$$

$$= \begin{pmatrix} J_z/\Gamma & 0 & J_{xz}/\Gamma \\ 0 & 1/J_y & 0 \\ J_{xz}/\Gamma & 0 & J_x/\Gamma \end{pmatrix}; \ \Gamma \triangleq J_xJ_z - J_{xz}^2$$

Unmanned Autonomous Vehicles: Dynamics

- Assume externally applied moments along body axes

$$\boldsymbol{m}^b = \begin{bmatrix} l & m & n \end{bmatrix}^\top$$

- Equations of rotational motion

$$\boxed{\frac{d\boldsymbol{\omega}_{b/i}^b}{dt_b} = \boldsymbol{J}^{-1}\left\{-\boldsymbol{\omega}_{b/i}^b \times \left(\boldsymbol{J}\boldsymbol{\omega}_{b/i}^b\right) + \boldsymbol{m}^b\right\}}$$

$$\begin{bmatrix} \dot{p} \\ \dot{q} \\ \dot{r} \end{bmatrix} = \begin{bmatrix} J_z/\Gamma & 0 & J_{xz}/\Gamma \\ 0 & 1/J_y & 0 \\ J_{xz}/\Gamma & 0 & J_x/\Gamma \end{bmatrix} \left(\begin{bmatrix} 0 & r & -q \\ -r & 0 & p \\ q & -p & 0 \end{bmatrix} \times \begin{bmatrix} J_x & 0 & -J_{xz} \\ 0 & J_y & 0 \\ -J_{xz} & 0 & J_z \end{bmatrix} \begin{bmatrix} p \\ q \\ r \end{bmatrix} + \begin{bmatrix} l \\ m \\ n \end{bmatrix} \right)$$

Unmanned Autonomous Vehicles: Dynamics

- Equations governing the rotational motion of the vehicle

$$\begin{pmatrix} \dot{p} \\ \dot{q} \\ \dot{r} \end{pmatrix} = \begin{bmatrix} J_z/\Gamma & 0 & J_{xz}/\Gamma \\ 0 & 1/J_y & 0 \\ J_{xz}/\Gamma & 0 & J_x/\Gamma \end{bmatrix} \left[\begin{pmatrix} J_{xz}pq + (J_y - J_z)qr \\ J_{xz}(r^2 - p^2) + (J_z - J_x)pr \\ (J_x - J_y)pq - J_{xz}qr \end{pmatrix} + \begin{pmatrix} l \\ m \\ n \end{pmatrix} \right]$$

$$= \begin{bmatrix} \Gamma_1 pq - \Gamma_2 qr + \Gamma_3 l + \Gamma_4 n \\ \Gamma_5 pr - \Gamma_6(p^2 - r^2) + m/J_y \\ \Gamma_7 pq - \Gamma_1 qr + \Gamma_4 l + \Gamma_8 n \end{bmatrix}$$

where the inertia terms are

$$\Gamma_1 = \frac{J_{xz}(J_x - J_y + J_z)}{\Gamma},\ \Gamma_2 = \frac{J_z(J_z - J_y) + J_{xz}^2}{\Gamma},\ \Gamma_3 = \frac{J_z}{\Gamma},\ \Gamma_4 = \frac{J_{xz}}{\Gamma}$$

$$\Gamma_5 = \frac{J_z - J_x}{J_y},\ \Gamma_6 = \frac{J_{xz}}{J_y}, \Gamma_7 = \frac{(J_x - J_y)J_x + J_{xz}^2}{\Gamma},\ \Gamma_8 = \frac{J_x}{\Gamma}$$

Unmanned Autonomous Vehicles: Kinematics

Kinematics of Vehicle

Translational motion

$$\begin{pmatrix} \dot{p}_n \\ \dot{p}_e \\ \dot{p}_d \end{pmatrix} = \begin{pmatrix} \mathsf{C}_\theta \mathsf{C}_\psi & \mathsf{S}_\phi s_\theta \mathsf{C}_\psi - \mathsf{C}_\phi \mathsf{S}_\psi & \mathsf{C}_\phi \mathsf{S}_\theta \mathsf{C}_\psi + \mathsf{S}_\phi \mathsf{S}_\psi \\ \mathsf{C}_\theta \mathsf{S}_\psi & \mathsf{S}_\phi \mathsf{S}_\theta \mathsf{S}_\psi + \mathsf{C}_\phi \mathsf{C}_\psi & \mathsf{C}_\phi \mathsf{S}_\theta \mathsf{S}_\psi - \mathsf{S}_\phi \mathsf{C}_\psi \\ -\mathsf{S}_\theta & \mathsf{S}_\phi \mathsf{C}_\theta & \mathsf{C}_\phi \mathsf{C}_\theta \end{pmatrix} \begin{pmatrix} u \\ v \\ w \end{pmatrix}$$

Rotational motion

$$\begin{pmatrix} \dot{\phi} \\ \dot{\theta} \\ \dot{\psi} \end{pmatrix} = \begin{pmatrix} 1 & \sin\phi \tan\theta & \cos\phi \tan\theta \\ 0 & \cos\phi & -\sin\phi \\ 0 & \sin\phi \sec\theta & \cos\phi \sec\theta \end{pmatrix} \begin{pmatrix} p \\ q \\ r \end{pmatrix}$$

Unmanned Autonomous Vehicles: Dynamics

Dynamics of Vehicle

Translational motion

$$\begin{pmatrix} \dot{u} \\ \dot{v} \\ \dot{w} \end{pmatrix} = \begin{pmatrix} rv - qw \\ pw - ru \\ qu - pv \end{pmatrix} + \frac{1}{m} \begin{pmatrix} f_x \\ f_y \\ f_z \end{pmatrix}$$

Rotational motion

$$\begin{pmatrix} \dot{p} \\ \dot{q} \\ \dot{r} \end{pmatrix} = \begin{pmatrix} \Gamma_1 pq - \Gamma_2 qr \\ \Gamma_5 pr - \Gamma_6 (p^2 - r^2) \\ \Gamma_7 pq - \Gamma_1 qr \end{pmatrix} + \begin{pmatrix} \Gamma_3 & 0 & \Gamma_4 \\ 0 & 1/J_y & 0 \\ \Gamma_4 & 0 & \Gamma_8 \end{pmatrix} \begin{pmatrix} l \\ m \\ n \end{pmatrix}$$

Unmanned Autonomous Vehicles: Kinematics and Dynamics

- Translational motion in terms of **velocities referenced to air-mass surroundings**

$$\begin{pmatrix} \dot{p}_n \\ \dot{p}_e \\ \dot{p}_d \end{pmatrix} = \mathcal{R}_b^v(\phi,\theta,\psi) \begin{pmatrix} u_r \\ v_r \\ w_r \end{pmatrix} + \begin{pmatrix} w_n \\ w_e \\ w_d \end{pmatrix}$$

$$\begin{pmatrix} \dot{u}_r \\ \dot{v}_r \\ \dot{w}_r \end{pmatrix} = \begin{pmatrix} rv_r - qw_r \\ pw_r - ru_r \\ qu_r - pv_r \end{pmatrix} + \frac{1}{m} \begin{pmatrix} f_x \\ f_y \\ f_z \end{pmatrix} - \mathcal{R}_b^v(\phi,\theta,\psi) \begin{pmatrix} \dot{w}_n \\ \dot{w}_e \\ \dot{w}_d \end{pmatrix}$$

$$\mathcal{R}_b^v(\phi,\theta,\psi) = \begin{pmatrix} \mathsf{c}_\theta \mathsf{c}_\psi & \mathsf{s}_\phi s_\theta \mathsf{c}_\psi - \mathsf{c}_\phi \mathsf{s}_\psi & \mathsf{c}_\phi \mathsf{s}_\theta \mathsf{c}_\psi + \mathsf{s}_\phi \mathsf{s}_\psi \\ \mathsf{c}_\theta \mathsf{s}_\psi & \mathsf{s}_\phi \mathsf{s}_\theta \mathsf{s}_\psi + \mathsf{c}_\phi \mathsf{c}_\psi & \mathsf{c}_\phi \mathsf{s}_\theta \mathsf{s}_\psi - \mathsf{s}_\phi \mathsf{c}_\psi \\ -\mathsf{s}_\theta & \mathsf{s}_\phi \mathsf{c}_\theta & \mathsf{c}_\phi \mathsf{c}_\theta \end{pmatrix} = \left(\mathcal{R}_v^b\right)^\top$$

- Importance of wind speeds and accelerations

Unmanned Autonomous Vehicles: Six-DOF Kinematics and Dynamics

$$\begin{pmatrix} \dot{p}_n \\ \dot{p}_e \\ \dot{p}_d \end{pmatrix} = \begin{pmatrix} \mathsf{c}_\theta \mathsf{c}_\psi & \mathsf{s}_\phi s_\theta \mathsf{c}_\psi - \mathsf{c}_\phi \mathsf{s}_\psi & \mathsf{c}_\phi \mathsf{s}_\theta \mathsf{c}_\psi + \mathsf{s}_\phi \mathsf{s}_\psi \\ \mathsf{c}_\theta \mathsf{s}_\psi & \mathsf{s}_\phi \mathsf{s}_\theta \mathsf{s}_\psi + \mathsf{c}_\phi \mathsf{c}_\psi & \mathsf{c}_\phi \mathsf{s}_\theta \mathsf{s}_\psi - \mathsf{s}_\phi \mathsf{c}_\psi \\ -\mathsf{s}_\theta & \mathsf{s}_\phi \mathsf{c}_\theta & \mathsf{c}_\phi \mathsf{c}_\theta \end{pmatrix} \begin{pmatrix} u \\ v \\ w \end{pmatrix}$$

$$\begin{pmatrix} \dot{\phi} \\ \dot{\theta} \\ \dot{\psi} \end{pmatrix} = \begin{pmatrix} 1 & \sin\phi \tan\theta & \cos\phi \tan\theta \\ 0 & \cos\phi & -\sin\phi \\ 0 & \sin\phi \sec\theta & \cos\phi \sec\theta \end{pmatrix} \begin{pmatrix} p \\ q \\ r \end{pmatrix}$$

$$\begin{pmatrix} \dot{u} \\ \dot{v} \\ \dot{w} \end{pmatrix} = \begin{pmatrix} rv - qw \\ pw - ru \\ qu - pv \end{pmatrix} + \frac{1}{m} \begin{pmatrix} f_x \\ f_y \\ f_z \end{pmatrix}$$

$$\begin{pmatrix} \dot{p} \\ \dot{q} \\ \dot{r} \end{pmatrix} = \begin{pmatrix} \Gamma_1 pq - \Gamma_2 qr \\ \Gamma_5 pr - \Gamma_6 (p^2 - r^2) \\ \Gamma_7 pq - \Gamma_1 qr \end{pmatrix} + \begin{pmatrix} \Gamma_3 & 0 & \Gamma_4 \\ 0 & 1/J_y & 0 \\ \Gamma_4 & 0 & \Gamma_8 \end{pmatrix} \begin{pmatrix} l \\ m \\ n \end{pmatrix}$$

Reference

References

1. Randal Beard and Timothy W. McLain, "Small Unmanned Aircraft: Theory and Practice", Princeton University Press, 2012
2. Bernard Etkin and Llyod Duff Reid, Dynamics of Flight Stability and Control, John Wiley and Sons, Third Edition, 1996.
3. Bandhu N. Pamadi, Performance, Stability, and Control of Airplanes, AIAA Education Series, 1998.

Thank you for your attention !!!