Guidance and Control of Unmanned Autonomous Vehicles

Shashi Ranjan Kumar

Associate Professor
Department of Aerospace Engineering
Indian Institute of Technology Bombay
Powai, Mumbai- 400076

https://www.aero.iitb.ac.in/~shashi
srk@aero.iitb.ac.in

Propulsion Forces and Moments: Propeller Thrust

- A simple model for the thrust generated by a propeller using Bernoulli's principle.
- Based on the propeller area and the difference in pressure ahead of and behind the propeller.
- Accurate for a perfectly efficient propeller.
- Total pressure upstream and downstream of propeller

$$\boxed{P_{\text{upstream}} = P_0 + \frac{1}{2}\rho V_a^2, \qquad P_{\text{downstream}} = P_0 + \frac{1}{2}\rho V_{\text{exit}}^2}$$

where P_0 is static pressure, and V_{exit} is the speed of air as it leaves the propeller.

- Linear relation between pulse-width-modulation command and angular velocity of propeller, for negligible transients in the motor.

Propulsion Forces and Moments: Propeller Thrust

- Relation between exit air speed and pulse-width-modulation command δ_t

$$V_{\text{exit}} = k_{\text{motor}}\,\delta_t$$

- Thrust produced by the motor, with S_{prop} as the area swept out by propeller

$$\begin{aligned} F_{x_p} &= S_{\text{prop}} C_{\text{prop}} \left(P_{\text{downstream}} - P_{\text{upstream}}\right) = \frac{1}{2}\rho S_{\text{prop}} C_{\text{prop}} \left(V_{\text{exit}}^2 - V_a^2\right) \\ &= \frac{1}{2}\rho S_{\text{prop}} C_{\text{prop}} \left[\left(k_{\text{motor}}\delta_t\right)^2 - \rho V_a^2\right] \end{aligned}$$

- Total force by the propeller

$$\boldsymbol{f}_p = \frac{1}{2}\rho S_{\text{prop}} C_{\text{prop}} \begin{bmatrix} \left(k_{\text{motor}}\delta_t\right)^2 - \rho V_a^2 \\ 0 \\ 0 \end{bmatrix}$$

- No moments due to the thrust as it acts through the center of mass of the vehicle.

Propulsion Forces and Moments: Propeller Torque

- As the propeller spins, it applies force to the air that passes through the propeller, increasing the momentum of the air while generating a thrust force on the MAV.
- Equal and opposite forces are applied by the air on the propeller
- **Net effect**: A torque about the propeller axis of rotation applied to the vehicle
- **Torque applied by motor to propeller**: An equal and opposite torque applied by the propeller to the motor fixed to the vehicle
- Propeller torque (opposite to the direction of the propeller rotation)

$$T_p = -k_{T_p}\Omega^2 = -k_{T_p}\left(k_\Omega \delta_t\right)^2$$

- Moment due to the propulsion system

$$\boldsymbol{m}_p = \begin{bmatrix} -k_{T_p}\left(k_\Omega \delta_t\right)^2 \\ 0 \\ 0 \end{bmatrix}$$

Unmanned Autonomous Vehicles: Atmospheric Disturbances

- Relationship between ground velocity, air velocity, and wind velocity

$$\boldsymbol{V}_g = \boldsymbol{V}_a + \boldsymbol{V}_w$$

- **Total wind vector**: A combination of steady ambient wind and stochastic process (wind gusts and other atmospheric disturbances)

$$\boldsymbol{V}_w = \boldsymbol{V}_{w_s} + \boldsymbol{V}_{w_g}$$

- Steady ambient wind, in an inertial frame

$$\boldsymbol{V}_{w_s}^i = \begin{pmatrix} w_{n_s} \\ w_{e_s} \\ w_{d_s} \end{pmatrix}$$

- Stochastic (gust) component of the wind: Expressed in the aircraft body frame
- Why is it so?

Unmanned Autonomous Vehicles: Atmospheric Disturbances

- Atmospheric effects in the direction of aircraft forward motion occur at a higher frequency than the lateral and down directions.
- Wind gust in terms of its body-frame components

$$\boldsymbol{V}_{w_g}^b = \begin{pmatrix} u_{w_g} \\ v_{w_g} \\ w_{w_g} \end{pmatrix}$$

- Model for non-steady gust portion of the wind
  - By passing white noise through an LTI filter, given by the von Karmen turbulence spectrum.
- Unfortunately, no rational transfer function for the same.
- We can go for approximations then....

Unmanned Autonomous Vehicles: Atmospheric Disturbances

- **Dryden transfer functions**: Approximation of von Karmen model (**MIL-F-8785C**)

$$H_u(s) = \sigma_u \sqrt{\frac{2V_a}{L_u}} \frac{1}{(s + V_a/L_u)}, \quad H_v(s) = \sigma_v \sqrt{\frac{3V_a}{L_v}} \frac{(s + V_a/\sqrt{3}L_v)}{(s + V_a/L_v)^2}$$

$$H_w(s) = \sigma_w \sqrt{\frac{3V_a}{L_w}} \frac{(s + V_a/\sqrt{3}L_w)}{(s + V_a/L_w)^2}$$

- $\sigma_u, \sigma_v, \sigma_w$: Intensities of turbulence along the vehicle frame axes
- L_u, L_v, L_w: Spatial wavelengths
- V_a: Airspeed of vehicle
- Implementation using a constant nominal airspeed
- Suitable parameters to be chosen based on altitude (low or high) and turbulence (light and moderate) levels.

Unmanned Autonomous Vehicles: Atmospheric Disturbances

- **Overall wind model**: Combination of both steady and gust terms

$$\boldsymbol{V}_w^b = \begin{bmatrix} u_w \\ v_w \\ w_w \end{bmatrix} = \mathcal{R}_v^b(\phi, \theta, \psi) \begin{bmatrix} w_{n_s} \\ w_{e_s} \\ w_{d_s} \end{bmatrix} + \begin{bmatrix} u_{w_g} \\ v_{w_g} \\ w_{w_g} \end{bmatrix}$$

- Airspeed vector in body frame

$$\boldsymbol{V}_a^b = \begin{bmatrix} u_r \\ v_r \\ w_r \end{bmatrix} = \begin{bmatrix} u - u_w \\ v - v_w \\ w - w_w \end{bmatrix}$$

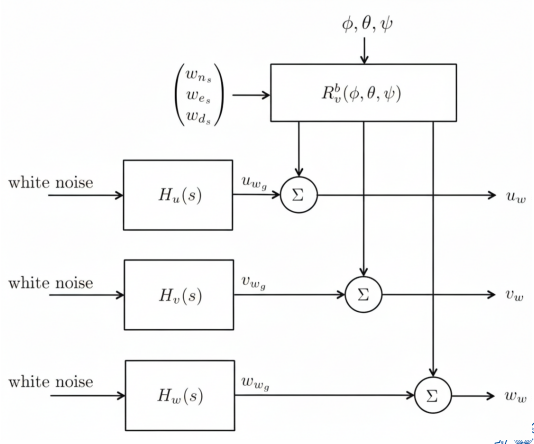

UAV: Kinematics and Dynamics

- **Equations of motion**: A set of 12 nonlinear, coupled, first-order, ODEs
- Difficult to design controller based on complete nonlinear vehicle model
- Reduced order model for control design using decoupling and linearization around the equilibrium point
- Equations of motion
  - **Longitudinal motion**: Airspeed, pitch angle, and altitude
  - **Lateral motion**: Roll and heading angles
- For most vehicles, weak dynamic coupling such that their unwanted effect can be handled by the controller
- **Trim**: Force and moment equilibrium point
- Quasi-linear aerodynamic (nonlinear in α) and propulsion (nonlinear in throttle) models

UAV: Kinematics and Dynamics

$$\begin{bmatrix}\dot{p}_n\\ \dot{p}_e\\ \dot{p}_d\end{bmatrix} = \begin{bmatrix}\mathsf{c}_\theta\mathsf{c}_\psi & \mathsf{s}_\phi s_\theta\mathsf{c}_\psi - \mathsf{c}_\phi\mathsf{s}_\psi & \mathsf{c}_\phi\mathsf{s}_\theta\mathsf{c}_\psi + \mathsf{s}_\phi\mathsf{s}_\psi\\ \mathsf{c}_\theta\mathsf{s}_\psi & \mathsf{s}_\phi\mathsf{s}_\theta\mathsf{s}_\psi + \mathsf{c}_\phi\mathsf{c}_\psi & \mathsf{c}_\phi\mathsf{s}_\theta\mathsf{s}_\psi - \mathsf{s}_\phi\mathsf{c}_\psi\\ -\mathsf{s}_\theta & \mathsf{s}_\phi\mathsf{c}_\theta & \mathsf{c}_\phi\mathsf{c}_\theta\end{bmatrix}\begin{bmatrix}u\\ v\\ w\end{bmatrix}$$

$$\begin{bmatrix}\dot{\phi}\\ \dot{\theta}\\ \dot{\psi}\end{bmatrix} = \begin{bmatrix}1 & \sin\phi\tan\theta & \cos\phi\tan\theta\\ 0 & \cos\phi & -\sin\phi\\ 0 & \sin\phi\sec\theta & \cos\phi\sec\theta\end{bmatrix}\begin{bmatrix}p\\ q\\ r\end{bmatrix}$$

$$\begin{bmatrix}\dot{u}\\ \dot{v}\\ \dot{w}\end{bmatrix} = \begin{bmatrix}rv - qw\\ pw - ru\\ qu - pv\end{bmatrix} + \frac{1}{m}\begin{bmatrix}f_x\\ f_y\\ f_z\end{bmatrix}$$

$$\begin{bmatrix}\dot{p}\\ \dot{q}\\ \dot{r}\end{bmatrix} = \begin{bmatrix}\Gamma_1 pq - \Gamma_2 qr\\ \Gamma_5 pr - \Gamma_6(p^2 - r^2)\\ \Gamma_7 pq - \Gamma_1 qr\end{bmatrix} + \begin{bmatrix}\Gamma_3 & 0 & \Gamma_4\\ 0 & 1/J_y & 0\\ \Gamma_4 & 0 & \Gamma_8\end{bmatrix}\begin{bmatrix}l\\ m\\ n\end{bmatrix}$$

Unmanned Autonomous Vehicles: Forces

$$\begin{pmatrix} f_x \\ f_y \\ f_z \end{pmatrix} = \begin{pmatrix} -mg\sin\theta \\ mg\cos\theta\sin\phi \\ mg\cos\theta\cos\phi \end{pmatrix} + \frac{1}{2}\rho S_{\text{prop}} C_{\text{prop}} \begin{pmatrix} (k_{\text{motor}}\delta_t)^2 - \rho V_a^2 \\ 0 \\ 0 \end{pmatrix}$$

$$+ \frac{\rho V_a^2 S}{2} \begin{bmatrix} C_X(\alpha) + C_{X_q}(\alpha)\dfrac{cq}{2V_a} + C_{X_{\delta_e}}(\alpha)\delta_e \\ C_{Y_0} + C_{Y_\beta}(\beta) + C_{Y_p}\dfrac{bp}{2V_a} + C_{Y_r}\dfrac{br}{2V_a} + C_{Y_{\delta_a}}\delta_a + C_{Y_{\delta_r}}\delta_r \\ C_Z(\alpha) + C_{Z_q}\dfrac{cq}{2V_a} + C_{Y_{\delta_e}}\delta_e \end{bmatrix}$$

$$C_X(\alpha) \triangleq -C_D(\alpha)\cos\alpha + C_L(\alpha)\sin\alpha,\ C_{X_q}(\alpha) \triangleq -C_{D_q}\cos\alpha + C_{L_q}\sin\alpha$$

$$C_{X_{\delta_e}}(\alpha) \triangleq -C_{D_{\delta_e}}\cos\alpha + C_{L_{\delta e}}\sin\alpha,\ C_Z(\alpha) \triangleq -C_D(\alpha)\sin\alpha - C_L(\alpha)\cos\alpha$$

$$C_{Z_q}(\alpha) \triangleq -C_{D_q}\sin\alpha - C_{L_q}\cos\alpha,\ C_{Z_{\delta_e}}(\alpha) \triangleq -C_{D_{\delta_e}}\sin\alpha - C_{L_{\delta_e}}\cos\alpha$$

Unmanned Autonomous Vehicles: Moments

$$
\begin{pmatrix} l \\ m \\ n \end{pmatrix} = \frac{1}{2}\rho V_a^2 S \begin{bmatrix} b\left(C_{l_0} + C_{l_\beta}\beta + C_{l_p}\frac{b}{2V_a}p + C_{l_r}\frac{b}{2V_a}r + C_{l_{\delta_a}}\delta_a + C_{l_{\delta_r}}\delta_r\right) \\ c\left(C_{m_0} + C_{m_\alpha}\alpha + C_{m_q}\frac{b}{2V_a}q + C_{m_{\delta_e}}\delta_e\right) \\ b\left(C_{n_0} + C_{n_\beta}\beta + C_{n_p}\frac{b}{2V_a}p + C_{n_r}\frac{b}{2V_a}r + C_{n_{\delta_a}}\delta_a + C_{n_{\delta_r}}\delta_r\right) \end{bmatrix} + \begin{pmatrix} -k_{T_p}\left(k_\Omega \delta_t\right)^2 \\ 0 \\ 0 \end{pmatrix}
$$

How can we write EOM in terms of a quaternion?

Kinematics of Vehicle in terms of quaternion

Translational motion

$$\begin{pmatrix} \dot{p}_n \\ \dot{p}_e \\ \dot{p}_d \end{pmatrix} = \begin{bmatrix} q_1^2 + q_0^2 - q_2^2 - q_3^2 & 2(q_1 q_2 - q_3 q_0) & 2(q_1 q_3 + q_2 q_0) \\ 2(q_1 q_2 + q_3 q_0) & q_2^2 + q_0^2 - q_1^2 - q_3^2 & 2(q_2 q_3 - q_1 q_0) \\ 2(q_1 q_3 - q_2 q_0) & 2(q_2 q_3 + q_1 q_0) & q_3^2 + q_0^2 - q_2^2 - q_1^2 \end{bmatrix} \begin{pmatrix} u \\ v \\ w \end{pmatrix}$$

Rotational motion

$$\begin{pmatrix} \dot{q}_0 \\ \dot{q}_1 \\ \dot{q}_2 \\ \dot{q}_3 \end{pmatrix} = \frac{1}{2} \begin{pmatrix} 0 & -p & -q & -r \\ p & 0 & r & -q \\ q & -r & 0 & p \\ r & q & -p & 0 \end{pmatrix} \begin{pmatrix} q_0 \\ q_1 \\ q_2 \\ q_3 \end{pmatrix}$$

Unmanned Autonomous Vehicles: Dynamics

Dynamics of Vehicle

Translational motion

$$\begin{pmatrix} \dot{u} \\ \dot{v} \\ \dot{w} \end{pmatrix} = \begin{pmatrix} rv - qw \\ pw - ru \\ qu - pv \end{pmatrix} + \frac{1}{m} \begin{pmatrix} f_x \\ f_y \\ f_z \end{pmatrix}$$

Rotational motion

$$\begin{pmatrix} \dot{p} \\ \dot{q} \\ \dot{r} \end{pmatrix} = \begin{pmatrix} \Gamma_1 pq - \Gamma_2 qr \\ \Gamma_5 pr - \Gamma_6 (p^2 - r^2) \\ \Gamma_7 pq - \Gamma_1 qr \end{pmatrix} + \begin{pmatrix} \Gamma_3 & 0 & \Gamma_4 \\ 0 & 1/J_y & 0 \\ \Gamma_4 & 0 & \Gamma_8 \end{pmatrix} \begin{pmatrix} l \\ m \\ n \end{pmatrix}$$

Unmanned Autonomous Vehicles: Dynamics

Translational motion

$$\begin{pmatrix} \dot{u} \\ \dot{v} \\ \dot{w} \end{pmatrix} = \begin{pmatrix} rv - qw \\ pw - ru \\ qu - pv \end{pmatrix} + \frac{1}{m} \begin{pmatrix} f_x \\ f_y \\ f_z \end{pmatrix}$$

$$\begin{pmatrix} f_x \\ f_y \\ f_z \end{pmatrix} = \begin{pmatrix} mg(q_1 q_3 - q_2 q_0) \\ mg(q_2 q_3 + q_1 q_0) \\ mg(q_3^2 + q_0^2 - q_1^2 - q_2^2) \end{pmatrix} + \frac{1}{2}\rho S_{\text{prop}} C_{\text{prop}} \begin{pmatrix} (k_{\text{motor}}\delta_t)^2 - \rho V_a^2 \\ 0 \\ 0 \end{pmatrix}$$

$$+ \frac{1}{2}\rho V_a^2 S \begin{bmatrix} C_X(\alpha) + C_{X_q}(\alpha)\frac{c}{2V_a}q + C_{X_{\delta_e}}(\alpha)\delta_e \\ C_{Y_0} + C_Y(\beta) + C_{Y_p}\frac{b}{2V_a}p + C_{Y_r}\frac{b}{2V_a}r + C_{Y_{\delta_a}}\delta_a + C_{Y_{\delta_r}}\delta_r \\ C_Z(\alpha) + C_{Z_q}\frac{c}{2V_a}q + C_{Y_{\delta_e}}\delta_e \end{bmatrix}$$

Rotational motion

$$\dot{p} = \Gamma_1 pq - \Gamma_2 qr + \frac{1}{2}\rho V_a^2 Sb\left[C_{p_0} + C_{p_\beta}\beta + C_{p_p}\frac{bp}{2V_a} + C_{p_r}\frac{br}{2V_a} + C_{p_{\delta_a}}\delta_a + C_{p_{\delta_r}}\delta_r\right]$$

$$\dot{q} = \Gamma_5 pr - \Gamma_6(p^2 - r^2) + \frac{\rho V_a^2 Sc}{2J_y}\left[C_{m_0} + C_{m_\alpha}\alpha + C_{m_q}\frac{cq}{2V_a} + C_{m_{\delta_e}}\delta_e\right]$$

$$\dot{r} = \Gamma_7 pq - \Gamma_1 qr + \frac{1}{2}\rho V_a^2 Sb\left[C_{r_0} + C_{r_\beta}\beta + C_{r_p}\frac{bp}{2V_a} + C_{r_r}\frac{br}{2V_a} + C_{r_{\delta_a}}\delta_a + C_{n_{\delta_r}}\delta_r\right]$$

$$C_{p_0} = \Gamma_3 C_{l_0} + \Gamma_4 C_{n_0}, \quad C_{r_0} = \Gamma_4 C_{l_0} + \Gamma_8 C_{n_0}, \quad C_{p_\beta} = \Gamma_3 C_{l_\beta} + \Gamma_4 C_{n_\beta}$$

$$C_{r_\beta} = \Gamma_4 C_{l_\beta} + \Gamma_8 C_{n_\beta}, \quad C_{p_p} = \Gamma_3 C_{l_p} + \Gamma_4 C_{n_p}, \quad C_{r_p} = \Gamma_4 C_{l_p} + \Gamma_8 C_{n_p}$$

$$C_{p_r} = \Gamma_3 C_{l_r} + \Gamma_4 C_{n_r}, \quad C_{r_r} = \Gamma_4 C_{l_r} + \Gamma_8 C_{n_r}, \quad C_{p_{\delta_a}} = \Gamma_3 C_{l_{\delta_a}} + \Gamma_4 C_{n_{\delta_a}}$$

$$C_{r_{\delta_a}} = \Gamma_4 C_{l_{\delta_a}} + \Gamma_8 C_{n_{\delta_a}}, \quad C_{p_{\delta_r}} = \Gamma_3 C_{l_{\delta_r}} + \Gamma_4 C_{n_{\delta_r}}, \quad C_{r_{\delta_r}} = \Gamma_4 C_{l_{\delta_r}} + \Gamma_8 C_{n_{\delta_r}}$$

Unmanned Autonomous Vehicles: Kinematics

- Dynamics remain unchanged even while using a quaternion.
- All forces act in body frame except the gravitational one.

$$\boldsymbol{f}_g^b = mg \begin{bmatrix} 2(q_1 q_3 - q_2 q_0) \\ 2(q_2 q_3 + q_1 q_0) \\ q_3^2 + q_0^2 - q_1^2 - q_2^2 \end{bmatrix}$$

- Kinematical equations change for quaternion and care must be taken during propagation such that $[Q]$ remains a unit quaternion.
- Modification of update equation to account for the unit quaternion $\|[Q]\| = 1$.
- Cost function $J = \frac{1}{8}\left(1 - \|[Q]\|^2\right)^2$
- Due to quadratic nature of J, use gradient descent algorithm to minimize J.

Kinematics of the vehicle in terms of quaternion

$$\begin{pmatrix} \dot{q}_0 \\ \dot{q}_1 \\ \dot{q}_2 \\ \dot{q}_3 \end{pmatrix} = \frac{1}{2} \begin{pmatrix} 0 & -p & -q & -r \\ p & 0 & r & -q \\ q & -r & 0 & p \\ r & q & -p & 0 \end{pmatrix} \begin{pmatrix} q_0 \\ q_1 \\ q_2 \\ q_3 \end{pmatrix} - \lambda \frac{\partial J}{\partial [Q]}$$

$$= \frac{1}{2} \begin{pmatrix} \lambda(1 - \|[Q]\|^2) & -p & -q & -r \\ p & \lambda(1 - \|[Q]\|^2) & r & -q \\ q & -r & \lambda(1 - \|[Q]\|^2) & p \\ r & q & -p & \lambda(1 - \|[Q]\|^2) \end{pmatrix} \begin{pmatrix} q_0 \\ q_1 \\ q_2 \\ q_3 \end{pmatrix}$$

where $\lambda > 0$ denotes the strength of gradient descent.

UAV: Coordinated Turn

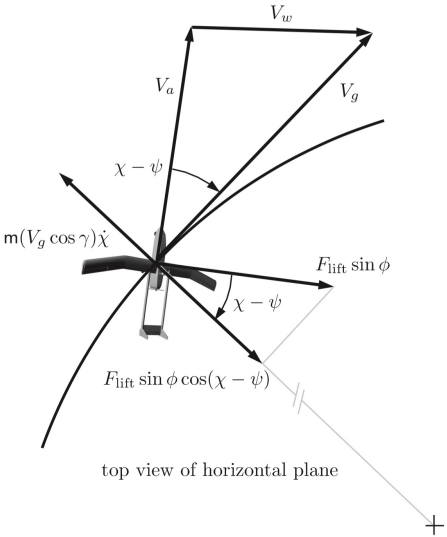

top view of horizontal plane

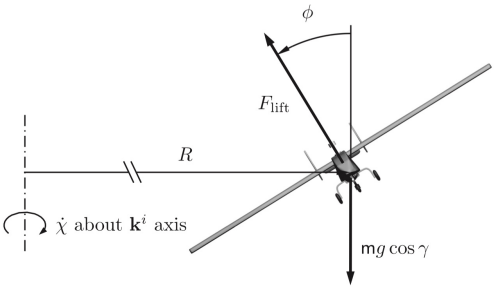

view in direction of $-\mathbf{i}^b$ axis
forces shown in $\mathbf{j}^b$-$\mathbf{k}^b$ plane

UAV: Coordinated Turn

- Heading rate: Depends on pitch rate, yaw rate, and pitch and roll states

$$\boxed{\dot{\psi} = q \sin\phi \sec\theta + r \cos\phi \sec\theta}$$

- Heading rate: Related to roll or bank angle
- Need of a simple relation between these two: **Coordinated turn**
- Coordinated turn: No lateral acceleration in body frame
- Suitable for passenger comfort for manned flight
- Bank angle ϕ chosen in a way that s no net side force acting on vehicle
- **Centrifugal force acting on vehicle**: Equal and opposite to horizontal component of lift force acting in radial direction

$$F_{\text{lift}} \sin\phi \cos(\chi - \psi) = m\frac{v^2}{R} = mv\omega = m(V_g \cos\gamma)\dot{\chi}$$

UAV: Coordinated Turn

- **Vertical component of lift force**: Equal and opposite to the projection of gravitational force onto $\boldsymbol{j}^b - \boldsymbol{k}^b$ plane.

$$F_{\text{lift}} \cos\phi \cos(\chi - \psi) = mg \cos\gamma$$

- Equation for a coordinated turn

$$\boxed{\dot{\chi} = \frac{g}{V_g} \tan\phi \cos(\chi - \psi)}$$

- Turning radius

$$R = \frac{V_g \cos\gamma}{\dot{\chi}} = \frac{V_g^2 \cos\gamma}{g \tan\phi \cos(\chi - \psi)}$$

- In absence of wind, $V_a = V_g$ and $\psi = \chi$,

$$\boxed{\dot{\chi} = \frac{g}{V_g} \tan\phi = \dot{\psi} = \frac{g}{V_a} \tan\phi}$$

UAV: Trim Conditions

- Given a nonlinear system

$$\dot{\boldsymbol{x}} = \boldsymbol{f}(\boldsymbol{x}, \boldsymbol{u}); \boldsymbol{f} : \mathbb{R}^n \times \mathbb{R}^m \to \mathbb{R}^n$$

- When do we say that a system is in its equilibrium?
- System is in equilibrium at state $\boldsymbol{x}^*$ and input $\boldsymbol{u}^*$ if $\boldsymbol{f}(\boldsymbol{x}^*, \boldsymbol{u}^*) = \boldsymbol{0}$
- **Trim condition**: Aircraft in equilibrium
- When the vehicle is in constant-altitude, wings-level steady flight, a subset of its states are in equilibrium.
- $h = -p_d$, constant body frame velocities, constant Euler angle and body rates
- In general, trim conditions may include non-constant states.
- Examples:
  - Steady climb, wing level flight (constant $\dot{h}$)
  - Constant turn (constant $\dot{\psi}$)

UAV: Trim Conditions

- General trim condition

$$\boxed{\dot{\boldsymbol{x}}^* = \boldsymbol{f}(\boldsymbol{x}^*, \boldsymbol{u}^*)}$$

- For trim calculations, treat wind as an unknown disturbance.
- **Objectives**: To compute the trim states and inputs when the vehicle simultaneously satisfies the following conditions:
  - Traveling at a constant speed V_a^*,
  - Climbing at a constant flight path angle of γ^*
  - A constant orbit of radius R^* with $R^* > R_{\min}$
- What about other known flight conditions, such as constant altitude flight?
- For constant altitude, wing level flight, $\boxed{\gamma^* = 0,\ R^* = \infty}$
- For constant altitude orbit with radius R^*, $\boxed{\gamma^* = 0}$

UAV: Trim Conditions

- For fixed-wing aircraft, system state vector and input vector are

$$\boldsymbol{x} = (p_n, p_e, p_d, u, v, w, \phi, \theta, \psi, p, q, r)^\top, \quad \boldsymbol{u} = (\delta_e, \delta_t, \delta_a, \delta_r)^\top$$

- Trimmed flight is independent of position as $\boldsymbol{f}(.)$ does not depend on position.
- As only $\dot{p}_e, \dot{p}_n$ depend on ψ, the trimmed flight is independent of ψ.
- For constant climb orbit,

$$\boxed{\dot{u}^* = \dot{v}^* = \dot{w}^* = 0, \quad \dot{\theta}^* = \dot{\phi}^* = \dot{p}^* = \dot{q}^* = 0}$$

- Constant roll and pitch angles
- Turn and climb rates

$$\boxed{\dot{\psi}^* = \frac{V_a^*}{R^*}\cos\gamma^* \implies \dot{r}^* = 0; \quad \dot{h}^* = V_a^* \sin\gamma^*}$$

UAV: Trim Conditions

$$\dot{\boldsymbol{x}}^* = \begin{bmatrix} \dot{p}_n^* \\ \dot{p}_e^* \\ \dot{h}^* \\ \dot{u}^* \\ \dot{v}^* \\ \dot{w}^* \\ \dot{\phi}^* \\ \dot{\theta}^* \\ \dot{\psi}^* \\ \dot{p}^* \\ \dot{q}^* \\ \dot{r}^* \end{bmatrix} = \begin{bmatrix} \text{Don't care} \\ \text{Don't care} \\ V_a^* \sin\gamma^* \\ 0 \\ 0 \\ 0 \\ 0 \\ 0 \\ \dfrac{V_a^* \cos\gamma^*}{R^*} \\ 0 \\ 0 \\ 0 \end{bmatrix}$$

- Computation of $\boldsymbol{x}^*$
- Solving a nonlinear algebraic system of equations
- Use of the trim command in Simulink or using a subroutine

UAV: Simulink model to Compute Aircraft Trim

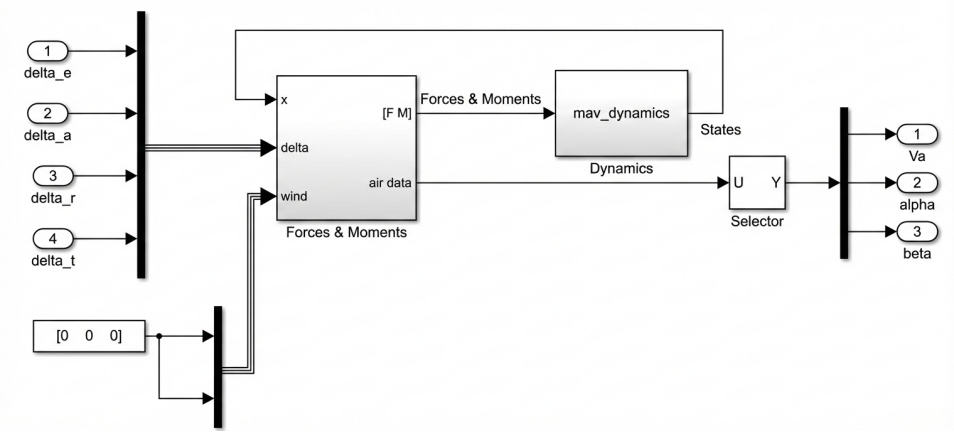

$$\begin{bmatrix} X & U & Y & DX \end{bmatrix} = \text{TRIM}(\text{“SYS”}, X_0, U_0, Y_0, IX, IU, IY, DX_0, IDX)$$

UAV: Simulink model to Compute Aircraft Trim

- Can we perform trim without using the Simulink model?
- Input to trim function: V_a^*, γ^*, R^*
- Variables α, β, ϕ along with V_a^*, γ^*, R^* suffice to compute trim values of UAV.
- Body frame velocities and pitch angle

$$\begin{bmatrix} u^* \\ v^* \\ w^* \end{bmatrix} = V_a^* \begin{bmatrix} \cos\alpha^* \cos\beta^* \\ \sin\beta^* \\ \sin\alpha^* \cos\beta^* \end{bmatrix}, \quad \boxed{\theta^* = \alpha^* + \gamma^*}$$

- Angular rates

$$\begin{bmatrix} p^* \\ q^* \\ r^* \end{bmatrix} = \begin{bmatrix} 1 & 0 & -\sin\theta^* \\ 0 & \cos\phi^* & \sin\phi^* \cos\theta^* \\ 0 & -\sin\phi^* & \cos\phi^* \cos\theta^* \end{bmatrix} \begin{bmatrix} \dot{\phi}^* = 0 \\ \dot{\theta}^* = 0 \\ \dot{\psi}^* = V_a^*/R^* \end{bmatrix} = \frac{V_a^*}{R^*} \begin{bmatrix} -\sin\theta^* \\ \sin\phi^* \cos\theta^* \\ \cos\phi^* \cos\theta^* \end{bmatrix}$$

UAV: Simulink model to Compute Aircraft Trim

- Pitch rate equation

$$\dot{q} = \Gamma_5 pr - \Gamma_6(p^2 - r^2) + \frac{\rho V_a^2 Sc}{2J_y}\left[C_{m_0} + C_{m_\alpha}\alpha + C_{m_q}\frac{cq}{2V_a} + C_{m_{\delta_e}}\delta_e\right] = 0$$

- Elevator input

$$\delta_e^* = \frac{\dfrac{J_{xz}(p^{*2} - r^{*2}) + (J_x - J_z)p^* r^*}{0.5\rho(V_a^*)^2 cS} - C_{m_0} - C_{m_\alpha}\alpha^* - C_{m_q}\dfrac{cq^*}{2V_a^*}}{C_{m_{\delta_e}}}$$

- Equation of $\dot{u}$

$$\begin{aligned}\dot{u} =& rv - qw - mg\sin\theta + \frac{1}{2}\rho S_{\text{prop}} C_{\text{prop}}\left[(k_{\text{motor}}\delta_t)^2 - \rho V_a^2\right] \\ &+ \frac{\rho V_a^2 S}{2}\left[C_X(\alpha) + C_{X_q}(\alpha)\frac{cq}{2V_a} + C_{X_{\delta_e}}(\alpha)\delta_e\right] \\ =& 0\end{aligned}$$

UAV: Simulink model to Compute Aircraft Trim

- Throttle input

$$\delta_t^* = \sqrt{\frac{2m(-r^*v^* + q^*w^* + g\sin\theta^*) - \rho(V_a^*)^2 S\left[C_X(\alpha^*) + C_{X_q}(\alpha^*)\frac{cq^*}{2V_a^*} + C_{X_{\delta_e}}\delta_e^*\right]}{\rho S_{\text{prop}} C_{\text{prop}} k_{\text{motor}}^2} + \frac{(V_a^*)^2}{k_{\text{motor}}^2}}$$

- Roll and yaw rate equations

$$\dot{p} = \Gamma_1 pq - \Gamma_2 qr + \frac{1}{2}\rho V_a^2 Sb\left[C_{p_0} + C_{p_\beta}\beta + C_{p_p}\frac{bp}{2V_a} + C_{p_r}\frac{br}{2V_a} + C_{p_{\delta_a}}\delta_a + C_{p_{\delta_r}}\delta_r\right] = 0$$

$$\dot{r} = \Gamma_7 pq - \Gamma_1 qr + \frac{1}{2}\rho V_a^2 Sb\left[C_{r_0} + C_{r_\beta}\beta + C_{r_p}\frac{bp}{2V_a} + C_{r_r}\frac{br}{2V_a} + C_{r_{\delta_a}}\delta_a + C_{n_{\delta_r}}\delta_r\right] = 0$$

- Aileron and Rudder inputs

$$\begin{bmatrix}\delta_a^* \\ \delta_r^*\end{bmatrix} = \begin{bmatrix} C_{p_{\delta_a}} & C_{p_{\delta_r}} \\ C_{r_{\delta_a}} & C_{p_{\delta_r}}\end{bmatrix}^{-1}\begin{bmatrix}\frac{-\Gamma_1 p^* q^* + \Gamma_2 q^* r^*}{0.5\rho(V_a^*)^2 Sb} - C_{p_0} - C_{p_\beta}\beta^* - C_{p_p}\frac{bp^*}{2V_a^*} - C_{p_r}\frac{br^*}{2V_a^*} \\ \frac{-\Gamma_7 p^* q^* + \Gamma_1 q^* r^*}{0.5\rho(V_a^*)^2 Sb} - C_{r_0} - C_{r_\beta}\beta^* - C_{r_p}\frac{bp^*}{2V_a^*} - C_{r_r}\frac{br^*}{2V_a^*}\end{bmatrix}$$

UAV: Trim Conditions

- To obtain α, β, ϕ with given V_a^*, γ^*, R^*, $(\alpha^*, \beta^*, \phi^*) = \arg\min \|\dot{\boldsymbol{x}}^* - f(\boldsymbol{x}^*, \boldsymbol{u}^*)\|^2$

Algorithm 1 : Trim

1: Input: Desired airspeed V_a^*, desired flight path angle γ^*, and desired turn radius R^*
2: Compute: $(\alpha^*, \beta^*, \phi^*) = \arg\min \|\dot{x}^* - f(x^*, u^*)\|^2$
3: Compute trimmed states:

$$\begin{pmatrix} u^* = V_a^* \cos\alpha^* \cos\beta^* \\ v^* = V_a^* \sin\beta^* \\ w^* = V_a^* \sin\alpha^* \cos\beta^* \\ \theta^* = \alpha^* + \gamma^* \\ p^* = -\frac{V_a^*}{R^*} \sin\theta^* \\ q^* = \frac{V_a^*}{R^*} \sin\phi^* \cos\theta^* \\ r^* = \frac{V_a^*}{R^*} \cos\phi^* \cos\theta^* \end{pmatrix}$$

4: Compute trimmed input: $\begin{pmatrix} \delta_e^* & \delta_t^* & \delta_a^* & \delta_r^* \end{pmatrix}$

UAV: Trim Conditions using Gradient Descent Algorithm

- Cost function: $J(\boldsymbol{\xi}) = \|\dot{\boldsymbol{x}}^* - f(\boldsymbol{x}^*, \boldsymbol{u}^*)\|^2$
- With initial condition $\boldsymbol{\xi}^0$,

$$\boxed{\dot{\boldsymbol{\xi}} = -\kappa \frac{\partial J}{\partial \boldsymbol{\xi}}(\boldsymbol{\xi})}, \qquad \boxed{\boldsymbol{\xi}^{(k+1)} = \boldsymbol{\xi}^{(k)} - \kappa_d \frac{\partial J}{\partial \boldsymbol{\xi}}(\boldsymbol{\xi}^(k))}$$

- For trim calculation,

$$\frac{\partial J}{\partial \boldsymbol{\xi}} = \begin{bmatrix} \frac{\partial J}{\partial \xi_1} & \frac{\partial J}{\partial \xi_2} & \cdots & \frac{\partial J}{\partial \xi_n} \end{bmatrix}^\top$$

- To obtain each component $\frac{\partial J}{\partial \xi_i}$, using numerical approximations

$$\frac{\partial J}{\partial \xi_i} = \lim_{\epsilon \to 0} \frac{J(\xi_1, \cdots, \xi_i + \epsilon, \cdots \xi_n) - J(\xi_1, \cdots, \xi_i, \cdots \xi_n)}{\epsilon}$$

$$\frac{\partial J}{\partial \xi_i} \approx \frac{J(\xi_1, \cdots, \xi_i + \epsilon, \cdots \xi_n) - J(\xi_1, \cdots, \xi_i, \cdots \xi_n)}{\epsilon}$$

UAV: Linearizations

- General nonlinear system of equations

$$\dot{\boldsymbol{x}} = \boldsymbol{f}(\boldsymbol{x}, \boldsymbol{u}); \;\; \boldsymbol{x} \in \mathbb{R}^n, \boldsymbol{u} \in \mathbb{R}^m$$

- **Trim values**: $\boldsymbol{x}^*, \boldsymbol{u}^*$ s.t. $\boldsymbol{f}(\boldsymbol{x}^*, \boldsymbol{u}^*) = \boldsymbol{0}$
- Define deviations in state as $\bar{\boldsymbol{x}} = \boldsymbol{x} - \boldsymbol{x}^*$

$$\begin{aligned}\dot{\bar{\boldsymbol{x}}} =& \boldsymbol{f}(\boldsymbol{x}, \boldsymbol{u}) - \boldsymbol{f}(\boldsymbol{x}^*, \boldsymbol{u}^*) = \boldsymbol{f}(\boldsymbol{x}^* + \boldsymbol{x} - \boldsymbol{x}^*, \boldsymbol{u}^* + \boldsymbol{u} - \boldsymbol{u}^*) - \boldsymbol{f}(\boldsymbol{x}^*, \boldsymbol{u}^*) \\ =& \boldsymbol{f}(\boldsymbol{x}^* + \bar{\boldsymbol{x}}, \boldsymbol{u}^* + \bar{\boldsymbol{u}}) - \boldsymbol{f}(\boldsymbol{x}^*, \boldsymbol{u}^*)\end{aligned}$$

- Using Taylor's series

$$\begin{aligned}\dot{\bar{\boldsymbol{x}}} =& \boldsymbol{f}(\boldsymbol{x}^*, \boldsymbol{u}^*) + \frac{\partial \boldsymbol{f}(\boldsymbol{x}^*, \boldsymbol{u}^*)}{\partial \boldsymbol{x}} \bar{\boldsymbol{x}} + \frac{\partial \boldsymbol{f}(\boldsymbol{x}^*, \boldsymbol{u}^*)}{\partial \boldsymbol{u}} \bar{\boldsymbol{u}} + \text{HOT} - \boldsymbol{f}(\boldsymbol{x}^*, \boldsymbol{u}^*) \\ \approx& \frac{\partial \boldsymbol{f}(\boldsymbol{x}^*, \boldsymbol{u}^*)}{\partial \boldsymbol{x}} \bar{\boldsymbol{x}} + \frac{\partial \boldsymbol{f}(\boldsymbol{x}^*, \boldsymbol{u}^*)}{\partial \boldsymbol{u}} \bar{\boldsymbol{u}}\end{aligned}$$

UAV: Lateral State-Space Equations

- States and input vectors

$$\boldsymbol{x}_{\text{lat}} \triangleq \begin{pmatrix} v \\ p \\ r \\ \phi \\ \psi \end{pmatrix}, \quad \boldsymbol{u}_{\text{lat}} \triangleq \begin{pmatrix} \delta_a \\ \delta_r \end{pmatrix}$$

- Sideslip angle

$$\beta = \tan^{-1}\left(\frac{v}{u^2 + w^2}\right)$$

- Airspeed

$$V_a = \sqrt{u^2 + v^2 + w^2}$$

UAV: Lateral State-Space Equations

$$
\begin{aligned}
\dot{v} =& pw - ru + g\cos\theta\sin\phi + \frac{\rho b\sqrt{u^2+v^2+w^2}}{4m}\left(C_{Y_p}p + C_{Y_r}r\right) \\
&+ \frac{\rho S\left(u^2+v^2+w^2\right)}{2m}\left[C_{Y_0} + C_{Y_\beta}\tan^{-1}\left[\frac{v}{\sqrt{u^2+w^2}}\right] + C_{Y_{\delta_a}}\delta_a + C_{Y_{\delta_r}}\delta_r\right] \\
\dot{p} =& \Gamma_1 pq - \Gamma_2 qr + \frac{\rho b^2\sqrt{u^2+v^2+w^2}}{4}\left(C_{p_p}p + C_{p_r}r\right) \\
&+ \frac{\rho Sb\left(u^2+v^2+w^2\right)}{2}\left[C_{p_0} + C_{p_\beta}\tan^{-1}\left[\frac{v}{\sqrt{u^2+w^2}}\right] + C_{p_{\delta_a}}\delta_a + C_{p_{\delta_r}}\delta_r\right] \\
\dot{r} =& \Gamma_7 pq - \Gamma_1 qr + \frac{\rho b^2\sqrt{u^2+v^2+w^2}}{4}\left(C_{r_p}p + C_{r_r}r\right) \\
&+ \frac{\rho Sb\left(u^2+v^2+w^2\right)}{2}\left[C_{r_0} + C_{r_\beta}\tan^{-1}\left[\frac{v}{\sqrt{u^2+w^2}}\right] + C_{r_{\delta_a}}\delta_a + C_{r_{\delta_r}}\delta_r\right] \\
\dot{\phi} =& p + q\sin\phi\tan\theta + r\cos\phi\tan\theta \\
\dot{\psi} =& q\sin\phi\sec\theta + r\cos\phi\sec\theta
\end{aligned}
$$

UAV: Lateral State-Space Equations

- Linearized equations

$$\boxed{\dot{\bar{\boldsymbol{x}}} \approx \frac{\partial \boldsymbol{f}(\boldsymbol{x}^*, \boldsymbol{u}^*)}{\partial \boldsymbol{x}} \bar{\boldsymbol{x}} + \frac{\partial \boldsymbol{f}(\boldsymbol{x}^*, \boldsymbol{u}^*)}{\partial \boldsymbol{u}} \bar{\boldsymbol{u}}}$$

- Jacobians of equations

$$\frac{\partial \boldsymbol{f}_{\text{lat}}}{\partial \boldsymbol{x}_{\text{lat}}} = \begin{pmatrix} \frac{\partial \dot{v}}{\partial v} & \frac{\partial \dot{v}}{\partial p} & \frac{\partial \dot{v}}{\partial r} & \frac{\partial \dot{v}}{\partial \phi} & \frac{\partial \dot{v}}{\partial \psi} \\ \frac{\partial \dot{p}}{\partial v} & \frac{\partial \dot{p}}{\partial p} & \frac{\partial \dot{p}}{\partial r} & \frac{\partial \dot{p}}{\partial \phi} & \frac{\partial \dot{p}}{\partial \psi} \\ \frac{\partial \dot{r}}{\partial v} & \frac{\partial \dot{r}}{\partial p} & \frac{\partial \dot{r}}{\partial r} & \frac{\partial \dot{r}}{\partial \phi} & \frac{\partial \dot{r}}{\partial \psi} \\ \frac{\partial \dot{\phi}}{\partial v} & \frac{\partial \dot{\phi}}{\partial p} & \frac{\partial \dot{\phi}}{\partial r} & \frac{\partial \dot{\phi}}{\partial \phi} & \frac{\partial \dot{\phi}}{\partial \psi} \\ \frac{\partial \dot{\psi}}{\partial v} & \frac{\partial \dot{\psi}}{\partial p} & \frac{\partial \dot{\psi}}{\partial r} & \frac{\partial \dot{\psi}}{\partial \phi} & \frac{\partial \dot{\psi}}{\partial \psi} \end{pmatrix}, \quad \frac{\partial \boldsymbol{f}_{\text{lat}}}{\partial \boldsymbol{u}_{\text{lat}}} = \begin{pmatrix} \frac{\partial \dot{v}}{\partial \delta_a} & \frac{\partial \dot{v}}{\partial \delta_r} \\ \frac{\partial \dot{p}}{\partial \delta_a} & \frac{\partial \dot{p}}{\partial \delta_r} \\ \frac{\partial \dot{r}}{\partial \delta_a} & \frac{\partial \dot{r}}{\partial \delta_r} \\ \frac{\partial \dot{\phi}}{\partial \delta_a} & \frac{\partial \dot{\phi}}{\partial \delta_r} \\ \frac{\partial \dot{\psi}}{\partial \delta_a} & \frac{\partial \dot{\psi}}{\partial \delta_r} \end{pmatrix}$$

- Stability and control derivatives

UAV: Lateral State-Space Equations

Linearized equations in lateral direction

$$\begin{bmatrix} \dot{\bar{v}} \\ \dot{\bar{p}} \\ \dot{\bar{r}} \\ \dot{\bar{\phi}} \\ \dot{\bar{\psi}} \end{bmatrix} = \begin{bmatrix} Y_v & Y_p & Y_r & g\cos\theta^*\cos\phi^* & 0 \\ L_v & L_p & Y_r & 0 & 0 \\ N_v & N_p & Y_r & 0 & 0 \\ 0 & 1 & \cos\phi^*\tan\theta^* & q^*\cos\phi^*\tan\theta^* - r^*\sin\phi^*\tan\theta^* & 0 \\ 0 & 0 & \cos\phi^*\sec\theta^* & p^*\cos\phi^*\sec\theta^* - r^*\sin\phi^*\sec\theta^* & 0 \end{bmatrix} \begin{bmatrix} \bar{v} \\ \bar{p} \\ \bar{r} \\ \bar{\phi} \\ \bar{\psi} \end{bmatrix} + \begin{bmatrix} Y_{\delta_a} & Y_{\delta_r} \\ Y_{\delta_a} & Y_{\delta_r} \\ Y_{\delta_a} & Y_{\delta_r} \\ 0 & 0 \\ 0 & 0 \end{bmatrix} \begin{bmatrix} \bar{\delta}_a \\ \bar{\delta}_r \end{bmatrix}$$

- Can we use the sideslip angle βin place of the lateral speed $\bar{v}$?
- Yes, one can use sidelslip angle β in place of $\bar{v}$. How?

$$v = V_a \sin\beta \implies \bar{v} = V_a^* \cos\beta^* \bar{\beta} \implies \boxed{\dot{\bar{\beta}} = \left(\frac{1}{V_a^* \cos\beta^*}\right)\dot{\bar{v}}}$$

UAV: Lateral State-Space Equations

$$
\begin{bmatrix} \dot{\bar{\beta}} \\ \dot{\bar{p}} \\ \dot{\bar{r}} \\ \dot{\bar{\phi}} \\ \dot{\bar{\psi}} \end{bmatrix}
=
\begin{bmatrix}
Y_v & \frac{Y_p}{V_a^* \cos\beta^*} & \frac{Y_r}{V_a^* \cos\beta^*} & \frac{g\cos\theta^*\cos\phi^*}{V_a^*\cos\beta^*} & 0 \\
L_v V_a^* \cos\beta^* & L_p & Y_r & 0 & 0 \\
N_v V_a^* \cos\beta^* & N_p & Y_r & 0 & 0 \\
0 & 1 & \cos\phi^* \tan\theta^* & q^* \cos\phi^* \tan\theta^* - r^* \sin\phi^* \tan\theta^* & 0 \\
0 & 0 & \cos\phi^* \sec\theta^* & p^* \cos\phi^* \sec\theta^* - r^* \sin\phi^* \sec\theta^* & 0
\end{bmatrix}
\begin{bmatrix} \bar{\beta} \\ \bar{p} \\ \bar{r} \\ \bar{\phi} \\ \bar{\psi} \end{bmatrix}
$$

$$
+
\begin{bmatrix}
\frac{Y_{\delta_a}}{V_a^* \cos\beta^*} & \frac{Y_{\delta_r}}{V_a^* \cos\beta^*} \\
Y_{\delta_a} & Y_{\delta_r} \\
Y_{\delta_a} & Y_{\delta_r} \\
0 & 0 \\
0 & 0
\end{bmatrix}
\begin{bmatrix} \bar{\delta}_a \\ \bar{\delta}_r \end{bmatrix}
$$

- Randal Beard and Timothy W. McLain, "Small Unmanned Aircraft: Theory and Practice", Princeton University Press, 2012