Guidance and Control of Unmanned Autonomous Vehicles

(Course Code: AE 700)

Department of Aerospace Engineering
Indian Institute of Technology Bombay

Practice Set 2

Instructor: Shashi Ranjan Kumar
February 13, 2026

1. We aim to control the aircraft's course angle using the commanded roll angle via the successive loop closure method. A schematic representation of the course hold autopilot is shown in Figure 1. The values of parameters a_{ϕ_1} and a_{ϕ_2} are given as 8.5 and 56.6, respectively. The maximum allowable error in the roll angle and the maximum aileron deflection are limited to 30° and 45°. Design the controller gains k_{p_ϕ}, k_{d_ϕ}, and k_{i_ϕ} for the inner loop to correspond to a damping ratio of 0.7. Then, by maintaining the same damping ratio and a bandwidth separation of 5, compute the values of gains k_{i_χ} and k_{p_χ}

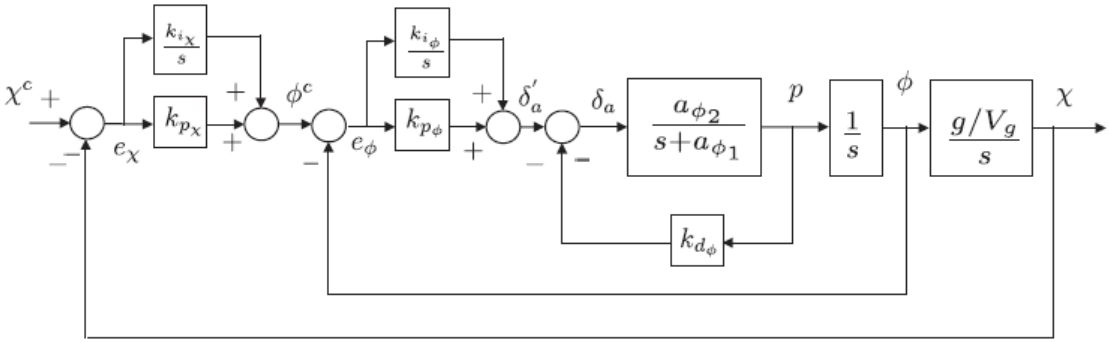

Figure 1: Course hold autopilot using successive loop closure.

2. For the given transfer function

$$\mathcal{G}(s) = \frac{100}{s^2 + 15s + 100}.$$

Find out the peak time ($\mathcal{T}_p$), settling time ($\mathcal{T}_s$), and percent peak overshoot (%OS).

3. Find the transfer function of a second-order system that yields an overshoot of 20% and a settling time of 2 seconds.

4. A feedback system output response has the following specifications :

   - Percentage overshoot: $M_p \leq 12\%$,
   - Settling time: $t_s \leq 5.4$sec,
   - Rise time: $t_r \leq 1.3$sec.

   (a) Sketch the region of acceptable closed-loop poles in the $s-$plane for the given system, assuming the transfer function can be approximated as a simple second-order.

(b) What is the expected overshoot if the rise time and settling time specifications are met exactly?

5. For each of the transfer functions enumerated below, find the locations of the poles and zeros and comment on the nature of each response (overdamped, underdamped, and so on).

(a) $\mathcal{G}(s) = \dfrac{1}{s+2}$

(b) $\mathcal{G}(s) = \dfrac{2}{(s+2)(s+5)}$

(c) $\mathcal{G}(s) = \dfrac{10(s+7)}{(s+10)(s+20)}$

(d) $\mathcal{G}(s) = \dfrac{20}{s^2+6s+144}$

(e) $\mathcal{G}(s) = \dfrac{e^{(-1.5s)}}{s+2}$

(f) $\mathcal{G}(s) = \dfrac{(s+5)}{(s+10)^2}$

6. Determine the validity of the second-order approximation for the following transfer functions using the dominant pole concept.

(a) $\mathcal{G}(s) = \dfrac{700}{(s+15)\,(s^2+4s+100)}$

(b) $\mathcal{G}(s) = \dfrac{360}{(s+4)\,(s^2+2s+90)}$

7. Consider an aircraft equipped with a rudder, and we want to control the sideslip angle using the same. A schematic representation of the closed-loop dynamics is illustrated in Figure 2, where $a_{\beta_1} = 31.84$ and $a_{\beta_2} = 7.29$. Suppose the maximum allowable error in the side slip angle is given by $60°$ and the maximum allowable rudder deflection is given by $15°$. Calculate the gains k_{p_β} and k_{i_β} to achieve a damping ratio of 0.5. Furthermore, obtain the undamped natural frequency of the closed-loop system.

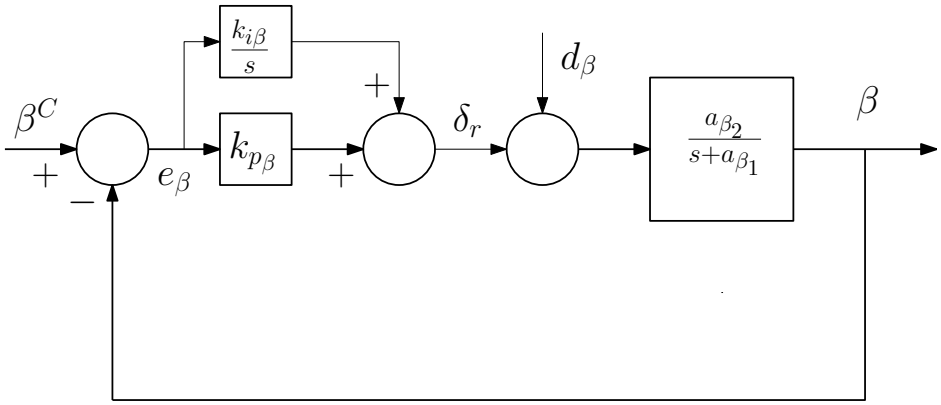

Figure 2: Schematic representation of closed-loop sideslip control.

8. Consider the cascaded feedback control system shown in the block diagram Figure 3 . The system consists of three nested control loops. The plant transfer functions for each stage are given as:

$$P_1(s) = \frac{1}{s+2}, \quad P_2(s) = \frac{1}{s+1}, \quad P_3(s) = \frac{1}{s+0.5}.$$

Your task is to design the controllers $C_1(s)$, $C_2(s)$, and $C_3(s)$ using the successive loop closure method, starting from the innermost loop and moving outwards. Follow the design specifications provided for each loop.

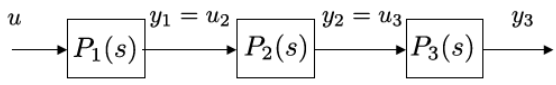

Figure 3: Open-loop transfer function modeled as a cascade of three transfer functions.

(a) Design a Proportional-Integral (PI) controller, $C_1(s) = K_{p1} + \dfrac{K_{i1}}{s}$, to control the plant $P_1(s)$. Use damping ratio, $\zeta = 0.707$ and natural frequency, $\omega_n = 10$ rad/s.

(b) Design a Proportional (P) controller, $C_2(s) = K_{p2}$, ensuring that the bandwidth separation is 5 times.

(c) Design a Proportional (P) controller, $C_3(s) = K_{p3}$, for the effective plant $P_3(s)$. The overall closed-loop system must satisfy a steady-state error requirement (e_{ss}) for a unit step input ($r_3(t) = u(t)$) must be equal to 10% (i.e., $e_{ss} = 0.1$).

Ans: $K_{p1} = 12.14$, $K_{i1} = 100$, $K_{p2} = 1$, $K_{p3} = 4.5$

9. Consider the altitude hold autopilot system shown in Figure 4 with the system parameters:

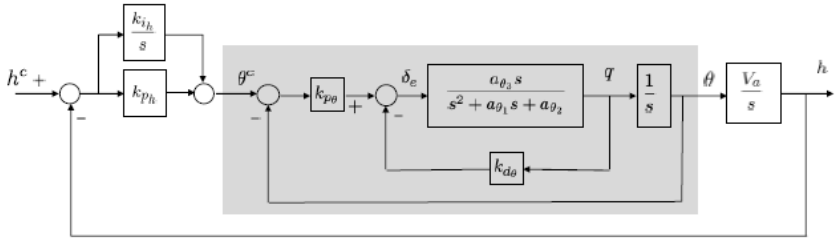

Figure 4: Successive loop feedback structure for altitude-hold autopilot

$a_{\theta_1} = 2.0\,\mathrm{s}^{-1}$, $a_{\theta_2} = 5.0\,\mathrm{s}^{-2}$, $a_{\theta_3} = 20.0\,\mathrm{s}^{-2}$, and airspeed $V_a = 150\,\mathrm{m/s}$.

(a) Calculate the values of gains k_{p_θ} and k_{d_θ} to achieve a closed-loop damping ratio $\zeta_\theta = 0.707$ and a natural frequency $\omega_{n_\theta} = 10\,\mathrm{rad/s}$ for the inner loop (pitch attitude control loop).

(b) Compute the DC gain of the inner loop (highlighted by gray color in Figure 4)

Ans: $k_{p_\theta} = 4.75$, $k_{d_\theta} = 0.607$, $k_{\theta_{DC}} = 0.95$