Queueing Theory: Part 1

Gaurav S. Kasbekar
Dept. of Electrical Engineering
IIT Bombay

References

- R. Wolff: Chapter 5
- S.M. Ross, “Stochastic Processes”: Chapter 5
- S.M. Ross, “Introduction to Probability Models”: Chapter 8
- J.F. Shortle et al., “Fundamentals of Queueing Theory”: Chapters 1 and 3
- D. Bertsekas and R. Gallager, “Data Networks”: Chapter 3
- M. Harchol-Balter: Chapters 16 and 19

Definitions and Notation

- Consider an arbitrary arrival stream of customers C_j, $j \in \{1,2,\dots\}$, where:
  - t_j: arrival instant of C_j, with:
    - $t_0 = 0$ and $t_0 \leq t_1 \leq t_2 \dots$
  - $T_j = t_{j+1} - t_j$: inter-arrival time between C_{j+1} and C_j
- Let:
  - S_j: *service time* (time spent in service) of C_j
  - D_j: *delay in queue of* C_j
  - $W_j = D_j + S_j$: *waiting time in system* of C_j
  - $t_j + W_j$: *departure instant* of C_j
- Number of customers in system at instant t:
  - $N(t) = \sum_{j=1}^{\infty} 1_{\{t_j \leq t < t_j + W_j\}}$
- Similarly, let:
  - number of customers in queue at instant t: $N_q(t)$
  - number of customers in service at instant t: $N_s(t)$
- So, $N(t) = N_q(t) + N_s(t)$
- Number of arrivals by time t:
  - $\Lambda(t) = \max\{j: t_j \leq t\}$
- Number of departures by time t:
  - $\Omega(t) = \Lambda(t) - N(t)$

Performance Metrics

- All of the following limits are assumed to hold w.p. 1
- Arrival rate:
  - $\lambda = \lim_{t\to\infty} \frac{\Lambda(t)}{t}$
- Average number of customers in system:
  - $L = \lim_{t\to\infty} \frac{1}{t}\int_0^t N(u)du$
- Average number of customers in queue:
  - $Q = \lim_{t\to\infty} \frac{1}{t}\int_0^t N_q(u)du$
- Average number of customers in service:
  - $L_s = \lim_{t\to\infty} \frac{1}{t}\int_0^t N_s(u)du$
- Average waiting time in system:
  - $w = \lim_{n\to\infty} \frac{\sum_{j=1}^n W_j}{n}$
- Average delay in queue:
  - $d = \lim_{n\to\infty} \frac{\sum_{j=1}^n D_j}{n}$
- Average service time:
  - $\frac{1}{\mu} = \lim_{n\to\infty} \frac{\sum_{j=1}^n S_j}{n}$
  - where μ is called the service rate

Little's Law ($L = \lambda w$)

- Recall:
  1) $L = \lim_{t\to\infty} \frac{1}{t}\int_0^t N(u)du$
  2) $\lambda = \lim_{t\to\infty} \frac{\Lambda(t)}{t}$
  3) $w = \lim_{n\to\infty} \frac{\sum_{j=1}^{n} W_j}{n}$
  4) $N(t) = \sum_{j=1}^{\infty} 1_{\{t_j \le t < t_j + W_j\}}$
- In fig., $\int_0^T N(t)dt$:
  - ❑ $\int_0^T \sum_{j=1}^{\Lambda(T)} 1_{\{t_j \le t < t_j + W_j\}}\, dt$
  - ❑ $\sum_{j=1}^{\Lambda(T)} \int_0^T 1_{\{t_j \le t < t_j + W_j\}} dt$
  - ❑ $\sum_{j=1}^{\Lambda(T)} W_j$
- For arbitrary t:
  5) $\int_0^t N(u)du = \sum_{j=1}^{\Lambda(t)} W_j + (\text{error term})$
- Dividing both sides of 5) by t, we get:
  6) $\frac{1}{t}\int_0^t N(u)du = \left(\frac{\Lambda(t)}{t}\right)\left[\frac{\sum_{j=1}^{\Lambda(t)} W_j}{\Lambda(t)}\right] + \frac{(\text{error term})}{t}$

- Taking limits as $t \to \infty$, we get:
  7) $L = \lambda w$,
  8) provided that $\lim_{t\to\infty} \frac{(\text{error term})}{t} = 0$
- Proof of equality in 8) is non-trivial and is omitted
- **Theorem** (Little's Law):
  - ❑If the limits 2) and 3) exist with $\lambda < \infty$ and $w < \infty$, then the limit in 1) exists and $L < \infty$
  - ❑Also, $L = \lambda w$

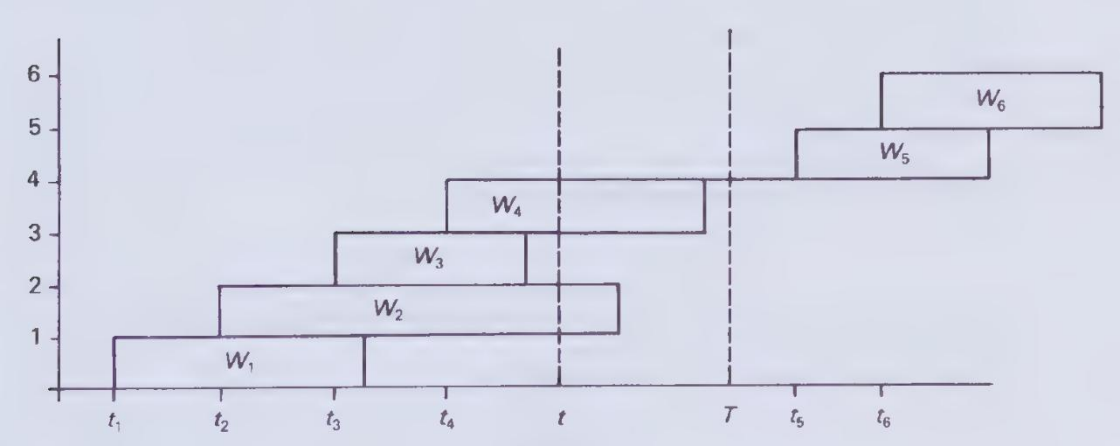

Ref: R. Wolff, "Stochastic Modeling and the Theory of Queues"

Little's Law (contd.)

- Recall:

1) $Q = \lim_{t\to\infty} \frac{1}{t}\int_0^t N_q(u)du$

2) $\lambda = \lim_{t\to\infty} \frac{\Lambda(t)}{t}$

3) $d = \lim_{n\to\infty} \frac{\sum_{j=1}^{n} D_j}{n}$

4) $L_s = \lim_{t\to\infty} \frac{1}{t}\int_0^t N_s(u)du$

5) $\frac{1}{\mu} = \lim_{n\to\infty} \frac{\sum_{j=1}^{n} S_j}{n}$

6) $L = \lambda w$

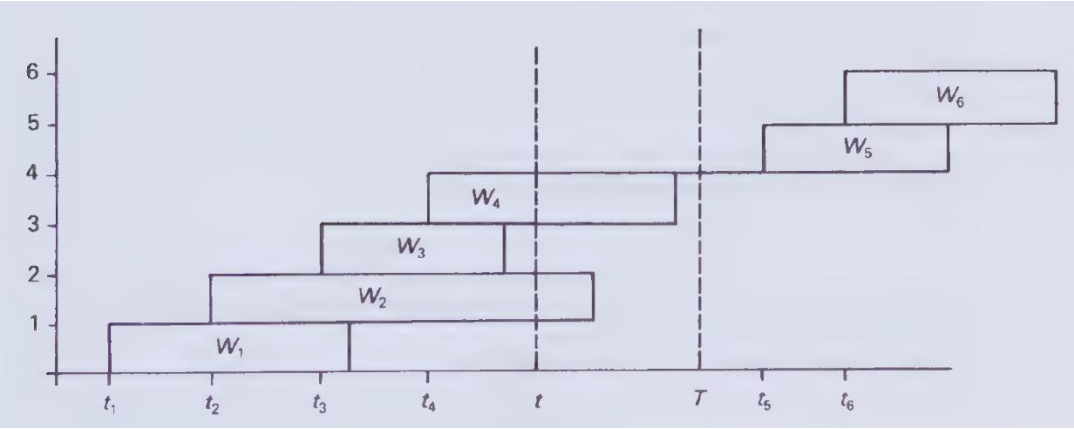

- Similarly, if the limits 2) and 3) exist and are finite, then:
  - ❑ $Q = \lambda d$
- Also, if the limits 2) and 5) exist and are finite, then:
  - ❑ $L_s = \frac{\lambda}{\mu}$

Ref: R. Wolff, "Stochastic Modeling and the Theory of Queues"

Example 1

- An elementary school has 6 grades (1st grade to 6th grade)
- Every year, 30 new students enrol in 1st grade:
- They progress through the successive grades and leave upon completing 6th grade
- Average total number of students enrolled at the school:
  - $L = \lambda w = 30 \times 6 = 180$

Example 2: The M/G/∞ Queue

- Recall the following example:
  - ❑ Calls arrive at a telephone switchboard according to Poisson process with rate λ
  - ❑ Call durations are i.i.d. with CDF $G(.)$ that has mean $\frac{1}{\mu}$, where $0 < \mu < \infty$
  - ❑ Infinite number of phone lines available
  - ❑ $N(t)$: number of calls in progress at time t
- We showed that $N(t)$ is a Poisson r.v. with mean $\lambda \int_0^t G^c(u)\, du$
- It follows that as $t \to \infty$, $N(t)$ converges in distribution to a Poisson r.v. with mean $\frac{\lambda}{\mu}$
- Hence, L:

  1) $\frac{\lambda}{\mu}$
- Also, w:

  2) $\frac{1}{\mu}$,
  - ❑ since no queueing occurs and hence $W_j = S_j$, for all $j \in \{1,2, \dots\}$
- By 1) and 2), Little's law is verified

M/M/1 Queue

- Recall: earlier, we showed that for CTMC of M/M/1 queue, stationary probabilities are given by:

  1) $P_n = \rho^n(1-\rho)$, for all $n \geq 0$, where $\rho = \frac{\lambda}{\mu}$

  - provided that $\rho < 1$
- Average number of customers in system:
  - $L = \sum_{n=0}^{\infty} n\, P_n = \frac{\rho}{1-\rho}$
- Average number of customers in queue:
  - $Q = \sum_{n=1}^{\infty} (n-1)\, P_n = \frac{\rho^2}{1-\rho}$
- Average number of customers in service:
  - $L_s = \frac{\lambda}{\mu} = \rho$
- As expected:
  - $L = L_s + Q$
- When $\rho \geq 1$:
  - queue grows without bound and both L and Q are infinite

M/M/1 Queue (contd.)

- Recall:
  - $L = \sum_{n=0}^{\infty} n\, P_n = \frac{\rho}{1-\rho}$
  - $Q = \sum_{n=1}^{\infty} (n-1)\, P_n = \frac{\rho^2}{1-\rho}$
  - $L_s = \frac{\lambda}{\mu} = \rho$
- Fig. shows plot of L vs. ρ:
  - as $\rho \to 1$, L grows without bound
- Average waiting time in system:
  - $w = \frac{L}{\lambda} = \frac{1}{\mu-\lambda}$
- Average delay in queue:
  - $w = \frac{Q}{\lambda} = \frac{\lambda}{\mu(\mu-\lambda)}$

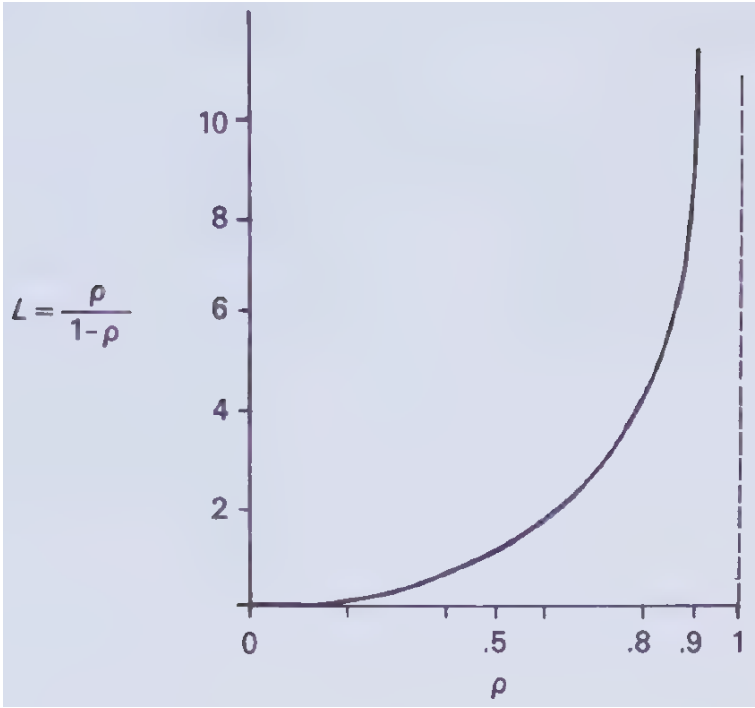

Ref: R. Wolff, "Stochastic Modeling and the Theory of Queues"

Example

- You are considering renting some data processing equipment
- Model 1:
  - ❑ service rate $\mu_1 = 100$ customers/hour,
  - ❑ rent $c_1 = \$1000$/month
- Model 2:
  - ❑ service rate $\mu_2 = 200$ customers/hour,
  - ❑ rent $c_2 = \$1800$/month
- Arrivals: Poisson at rate $\lambda = 80$ customers/hour during normal working hours (about 200 hours/month)
- Service: exponential distribution
- Also, equipment operates only during working hours
- Waiting time cost: $\$1$/customer-hour
- Which model should you rent?

- Rental cost for model $i \in \{1,2\}$: $\frac{c_i}{200}$
- Waiting time cost per hour for model $i \in \{1,2\}$:
  - ❑ $(\$1)L_i = \$L_i$, or equivalently,
  - ❑ $\lambda(\$1)w_i = \$\lambda w_i$
- Total expected cost/hour of Model $i \in \{1,2\}$:
  - ❑ $L_i + \frac{c_i}{200}$,
  - ❑ where $L_i = \frac{\rho_i}{1-\rho_i}$ and $\rho_i = \frac{\lambda}{\mu_i}$
  - ❑ $\$9$/hour for Model 1 and $\$9.67$/hour for Model 2
- Hence, you should rent Model 1

Poisson Arrivals See Time Averages (PASTA)

- Let:
  - ❑ $X(t)$ be the state of a continuous-time stochastic process (not necessarily Markovian) at time t
  - ❑ $\{N(t), t \geq 0\}$ be a Poisson process with rate λ
  - ❑ B be any subset of states, e.g., $B = \{0,1,2,3\}$ or $B = \{j\}$, of state space of $X(t)$
- Probability that system state is in B at time t:
  - *1)* $P(X(t) \in B)$
- Probability that arrival at time t finds system state to be in B:
  - *2)* $P(X(t) \in B | \text{an arrival occurs at time } t)$
- PASTA property states that the probabilities in 1) and 2) are equal, i.e.:
  - *3)* $P(X(t) \in B | \text{an arrival occurs at time } t) = P(X(t) \in B)$
- **Proof**:
  - ❑ Let $\delta > 0$
  - ❑ $P(X(t) \in B | N(t+\delta) - N(t) = 1)$:
    - ○ $\frac{P(\{X(t) \in B\} \cap \{N(t+\delta) - N(t) = 1\})}{P(N(t+\delta) - N(t) = 1)}$
    - ○ $\frac{P(X(t) \in B) P(N(t+\delta) - N(t) = 1)}{P(N(t+\delta) - N(t) = 1)}$, since by the independent increments property, the state of the system, $X(t)$, and future Poisson increment, $N(t+\delta) - N(t)$, are independent
    - ○ $P(X(t) \in B)$
  - ❑ Result follows by letting $\delta \to 0$

Poisson Arrivals See Time Averages (PASTA) (contd.)

- Recall: PASTA property states that:
  3) $P(X(t) \in B | \text{an arrival occurs at time } t) = P(X(t) \in B)$
- Now, suppose the process $X(t)$ is ergodic
- Then:
  - ❑ $P(X(t) \in B) = P_B =$ fraction of total time the system state is in B over an infinite timeline
  - ❑ $P(X(t) \in B | \text{an arrival occurs at time } t) = a_B =$fraction of arriving customers who find the system state to be in B over an infinite timeline
- By 3), the instantaneous probabilities match at all times t, so their long-run averages match as well:
  - ❑ $P_B = a_B$
- E.g.:
  - ❑ Let $X(t)$ be an irreducible and positive recurrent CTMC representing number of customers in a queuing system and $P_n = \lim_{t \to \infty} P(X(t) = n)$
  - ❑ Let a_n be the fraction of arrivals that find n customers in the system
  - ❑ Then by PASTA property, $P_n = a_n$
- In contrast, if the arrival process is not Poisson, then arrivals do not necessarily see time averages

Example

- Consider a queueing model in which:
  - all customers have service times equal to 1
  - interarrival times of customers are always greater than 1 (e.g., they may be uniformly distributed in $(1,2)$)
- Then every arrival finds the system empty, i.e.:
  - fraction of customers that find 0 customers in system=1
- However, fraction of time for which system is empty is not equal to 1
- Thus, arrivals do not see time averages

M/M/1 Queue (contd.)

- Recall: average waiting time in system:

  1) $w = \frac{L}{\lambda} = \frac{1}{\mu - \lambda}$
- Want to find distribution of waiting time
- Let N_a be the number of customers in system seen by an arrival:
  - ❑ denote its PMF by α_n, $n \in \{0,1,2, \dots\}$
- Waiting time:
  - ❑ $W = \sum_{j=1}^{N_a+1} S_j$,
  - ❑ where $\{S_j\}$ are i.i.d. exponential(μ) r.v.s
- By the PASTA property:
  - ❑ $\alpha_n = P_n = \rho^n(1-\rho)$, $n \in \{0,1,2, \dots\}$
- Recall: moment generating function (MGF) of exponentially distributed r.v. with rate μ is $\frac{\mu}{\mu - s}$
- MGF of W:
  - ❑ $E(E\{e^{sW}|N_a\})$
  - ❑ $E\left(\left(\frac{\mu}{\mu - s}\right)^{N_a+1}\right)$
  - ❑ $\sum_{n=0}^{\infty}\left(\frac{\mu}{\mu - s}\right)^{n+1}\rho^n(1-\rho)$
  - ❑ $\frac{\mu - \lambda}{\mu - \lambda - s}$
- Hence, W is exponentially distributed with rate $\mu - \lambda$:
  - ❑ consistent with 1)

M/M/1/N Queue

- Recall: by considering M/M/1/N queue as truncated version of M/M/1 queue, we showed that PMF of number of customers in system is:

  1) $P_n = \frac{\rho^n(1-\rho)}{1-\rho^{N+1}}$, for $n \in \{0, \dots, N\}$
- Since the number of states is finite, 1) holds for every value of $\rho > 0$
- Average number of customers:
  - ❑ $L = \sum_{n=0}^{N} nP_n = \frac{\rho[1-(N+1)\rho^N + N\rho^{N+1}]}{(1-\rho)(1-\rho^{N+1})}$
- Note that whenever there are N customers in system, arrival is blocked
- Average waiting time in system of customers who are served:
  - ❑ $w = \frac{L}{\lambda_s}$,
  - ❑ where λ_s is arrival rate of customers who are served
- λ_s:
  - ❑ $\lambda(1 - P_N)$
- Suppose customers who are not served represent lost sales at a cost of $\$C$ each
- Average cost of lost sales per unit time:
  - ❑ $\lambda P_N C$

M/M/m Queue

- Consider an M/M/m queue in which:
  - Arrival process is Poisson with rate λ,
  - There are $m \geq 1$ servers, and service distribution of each is exponential with rate μ,
  - Let $\rho = \frac{\lambda}{m\mu}$: known as *utilization factor* or *load factor*
- Recall: for a birth and death process:

  1) $P_0 = \frac{1}{1+\sum_{n=1}^{\infty}\frac{\lambda_{n-1}\lambda_{n-2}\dots\lambda_0}{\mu_n\mu_{n-1}\dots\mu_1}}$

  2) $P_n = \frac{\lambda_{n-1}\lambda_{n-2}\dots\lambda_0}{\mu_n\mu_{n-1}\dots\mu_1\left(1+\sum_{n=1}^{\infty}\frac{\lambda_{n-1}\lambda_{n-2}\dots\lambda_0}{\mu_n\mu_{n-1}\dots\mu_1}\right)}$, for all $n \geq 1$

  - Condition needed for limiting probabilities to exist:

    3) $\sum_{n=1}^{\infty}\frac{\lambda_{n-1}\lambda_{n-2}\dots\lambda_0}{\mu_n\mu_{n-1}\dots\mu_1} < \infty$
- Birth and death rates for M/M/m queue:

  4) $\lambda_n = \lambda$, for all $n \geq 0$

  5) $\mu_n = \begin{cases} n\mu, & \text{for } n \in \{1, \dots, m\}, \\ m\mu, & \text{for } n \geq m+1 \end{cases}$
- By 3), 4), and 5), condition for limiting probabilities of M/M/m queue to exist:
  - $\rho < 1$
- By 1), 2), 4), and 5), limiting probabilities of M/M/m queue are given by:
  - $P_0 = \frac{1}{\sum_{n=0}^{m-1}\frac{(m\rho)^n}{n!}+\frac{(m\rho)^m}{m!(1-\rho)}}$
  - $P_n = \begin{cases} P_0\frac{(m\rho)^n}{n!}, & \text{for } n \in \{1, \dots, m\}, \\ P_0\frac{m^m\rho^n}{m!}, & \text{for } n \geq m+1 \end{cases}$

M/M/m Queue (contd.)

- Recall: limiting probabilities of M/M/m queue are given by:

  1) $P_0 = \frac{1}{\sum_{n=0}^{m-1} \frac{(m\rho)^n}{n!} + \frac{(m\rho)^m}{m!(1-\rho)}}$

  2) $P_n = \begin{cases} P_0 \frac{(m\rho)^n}{n!}, & \text{for } n \in \{1, \dots, m\}, \\ P_0 \frac{m^m \rho^n}{m!}, & \text{for } n \geq m+1 \end{cases}$

- Let P^Q be the probability that an arrival will find all servers busy and will hence join the queue
- By PASTA property, P^Q:
  - ❑ $\sum_{n=m}^{\infty} P_n$

    3) $P_0 \frac{(m\rho)^m}{m!(1-\rho)}$
- Equation 3) is known as the *Erlang C formula*:
  - ❑ Often used in telephony to estimate the probability of a call request finding all the m available circuits busy
  - ❑ It is assumed that such a call request "remains in queue", i.e., continuously attempts to find a free circuit

M/M/m Queue (contd.)

- Recall:
  - Limiting probabilities of M/M/m queue are given by:

    1) $P_0 = \frac{1}{\sum_{n=0}^{m-1} \frac{(m\rho)^n}{n!} + \frac{(m\rho)^m}{m!(1-\rho)}}$

    2) $P_n = \begin{cases} P_0 \frac{(m\rho)^n}{n!}, & \text{for } n \in \{1, \dots, m\}, \\ P_0 \frac{m^m \rho^n}{m!}, & \text{for } n \geq m+1 \end{cases}$

    3) $P^Q = P_0 \frac{(m\rho)^m}{m!(1-\rho)}$
- Average number of customers in queue:
  - $Q = \sum_{n=0}^{\infty} n P_{m+n}$
  - $= P_0 \frac{(m\rho)^m}{m!} \sum_{n=0}^{\infty} n\rho^n$
  - $= P^Q \frac{\rho}{1-\rho}$
- Average delay in queue:
  - $d = \frac{Q}{\lambda} = \frac{\rho P^Q}{\lambda(1-\rho)}$, by Little's law
- Average waiting time in system:
  - $w = \frac{1}{\mu} + d$
  - $= \frac{1}{\mu} + \frac{\rho P^Q}{\lambda(1-\rho)}$
  - $= \frac{1}{\mu} + \frac{P^Q}{m\mu - \lambda}$
- Average number of customers in system:
  - $L = \lambda w = m\rho + \frac{\rho P^Q}{1-\rho}$, by Little's law

Example

- Want to compare average waiting times of following two queuing systems:
  - M/M/m queue with arrival rate λ and service rate of each server μ
  - M/M/1 queue with arrival rate λ and service rate of the server $m\mu$
- Average waiting times of M/M/m queue and M/M/1 queue are respectively:

  1) $w = \frac{1}{\mu} + \frac{P^Q}{m\mu - \lambda}$, and

  2) $\tilde{w} = \frac{1}{m\mu} + \frac{\tilde{P}^Q}{m\mu - \lambda}$,
  - where P^Q and $\tilde{P}^Q$ are the queueing probabilities in the two cases
- When $\rho = \frac{\lambda}{m\mu} \ll 1$ (lightly loaded system):
  - $P^Q \approx 0$ and $\tilde{P}^Q \approx 0$
  - So, by 1) and 2), $\frac{w}{\tilde{w}} \approx m$
- When ρ is only slightly less than 1 (heavily loaded system):
  - $P^Q \approx 1$, $\tilde{P}^Q \approx 1$, and $\frac{1}{\mu} \ll \frac{1}{m\mu - \lambda}$
  - So, by 1) and 2), $\frac{w}{\tilde{w}} \approx 1$
- *Intuition*:
  - In lightly loaded case, in the M/M/m queue, for a large fraction of time, only a few of the m servers are used and hence much of the total available service rate $m\mu$ is unutilized
  - In contrast, in the M/M/1 queue, the full service rate $m\mu$ is used whenever system is busy

M/M/m/m Queue

- Consider an M/M/m/m queue in which:
  - ❑ Arrival process is Poisson with rate λ,
  - ❑ There are $m \geq 1$ servers, and service distribution of each is exponential with rate μ
  - ❑ If an arrival finds all m servers busy, then it does not enter the system and is lost instead
- Recall: for a birth and death process:

  1) $P_0 = \frac{1}{1+\sum_{n=1}^{\infty}\frac{\lambda_{n-1}\lambda_{n-2}\dots\lambda_0}{\mu_n\mu_{n-1}\dots\mu_1}}$

  2) $P_n = \frac{\lambda_{n-1}\lambda_{n-2}\dots\lambda_0}{\mu_n\mu_{n-1}\dots\mu_1\left(1+\sum_{n=1}^{\infty}\frac{\lambda_{n-1}\lambda_{n-2}\dots\lambda_0}{\mu_n\mu_{n-1}\dots\mu_1}\right)}$, for all $n \geq 1$
- Birth and death rates for M/M/m/m queue:

  3) $\lambda_n = \lambda$, for $n \in \{0, 1, \dots, m-1\}$

  4) $\mu_n = n\mu$, for $n \in \{1, \dots, m\}$
- By 1), 2), 3), and 4), limiting probabilities of M/M/m/m queue are given by:

  5) $P_0 = \frac{1}{\sum_{n=0}^{m}\left[\frac{1}{n!}\left(\frac{\lambda}{\mu}\right)^n\right]}$

  6) $P_n = P_0\frac{1}{n!}\left(\frac{\lambda}{\mu}\right)^n$, for $n \in \{1, \dots, m\}$

M/M/m/m Queue (contd.)

- Recall: limiting probabilities of M/M/m/m queue are given by:

  5) $P_0 = \frac{1}{\sum_{n=0}^{m}\left[\frac{1}{n!}\left(\frac{\lambda}{\mu}\right)^n\right]}$

  6) $P_n = P_0 \frac{1}{n!}\left(\frac{\lambda}{\mu}\right)^n$, for $n \in \{1, \dots, m\}$

- Probability that an arrival will find all m servers busy and hence will be lost is:

  7) $P_m = \frac{\frac{1}{m!}\left(\frac{\lambda}{\mu}\right)^m}{\sum_{n=0}^{m}\left[\frac{1}{n!}\left(\frac{\lambda}{\mu}\right)^n\right]}$

- Equation 7):
  - ❑ is known as *Erlang B formula*
  - ❑ is widely used for evaluating the blocking probability of telephone systems

Burke's Theorem

- Recall:
  - ❑ A stationary CTMC is said to be time reversible if for all i and j:

  1) $q_{ij}^* = q_{ij}$
- Since the rates q_{ij} define the CTMC, by 1), it follows that if a CTMC is time-reversible, then:
  - ❑ its reverse chain is statistically identical to the forward chain,
  - ❑ i.e., the reverse chain can be described by same CTMC as forward chain
- **Theorem**: (Burke's Theorem) The following are true for a stationary M/M/m system with arrival rate λ:

  a) The departure process is Poisson(λ)

  b) The number of customers in the system at each time t is independent of the sequence of departure times prior to time t
- Note that:
  - ❑ whenever $n \leq m$ servers are busy, departures occur at rate $n\mu$
  - ❑ when system is empty, time until next departure is exp(λ) +exp(μ)
- So, part a), which says that interdeparture times are exp(λ), is surprising
- Part b) implies, e.g., that knowing that there was recently a stream of closely spaced departures does not indicate that the number of customers in the system is currently below average; it is also surprising

Burke's Theorem (contd.)

- Recall:
  - If a CTMC is time-reversible, then its reverse chain is statistically identical to the forward chain
  - **Proposition**: A stationary ergodic birth and death process is time reversible
  - **Theorem**: (Burke's Theorem) The following are true for a stationary M/M/m system with arrival rate λ:
    a) The departure process is Poisson(λ)
    b) The number of customers in the system at each time t is independent of the sequence of departure times prior to time t
- **Proof**:
  - Departures in forward process occur at points of arrival in reverse process
  - The M/M/m system is a birth and death process and hence is time reversible
  - So, reverse process is statistically identical to forward process
  - Hence, points of arrival of reverse process constitute a Poisson process with rate λ
  - So, by our previous observation, points of departures of forward process also constitute a Poisson process with rate λ, which proves a)
  - Sequence of departure times prior to time t in forward process is exactly the sequence of arrival times after time t in the reverse process
  - However, the future arrival pattern for the reverse process does not depend on number of customers at time t, because this process is a Poisson process
  - Hence, for the forward process, the number of customers at time t is independent of the sequence of departures prior to time t

Tandem Servers

- Want to find limiting probabilities of the two-server tandem system shown in Fig.
- A brute force approach is to model the system as a CTMC with state (n_1, n_2), where n_i, $i \in \{1,2\}$, is number of customers in queue i
- Fragment of state transition diagram shown in upper Fig.
- For $n_1 \geq 1$ and $n_2 \geq 1$, the balance equations are given by:
  - $P_{n_1,n_2}(\lambda + \mu_1 + \mu_2) = P_{n_1-1,n_2}\lambda + P_{n_1+1,n_2-1}\mu_1 + P_{n_1,n_2+1}\mu_2$
- These balance equations are hard to solve
- In contrast, Burke's theorem can be used to find limiting probabilities easily as follows

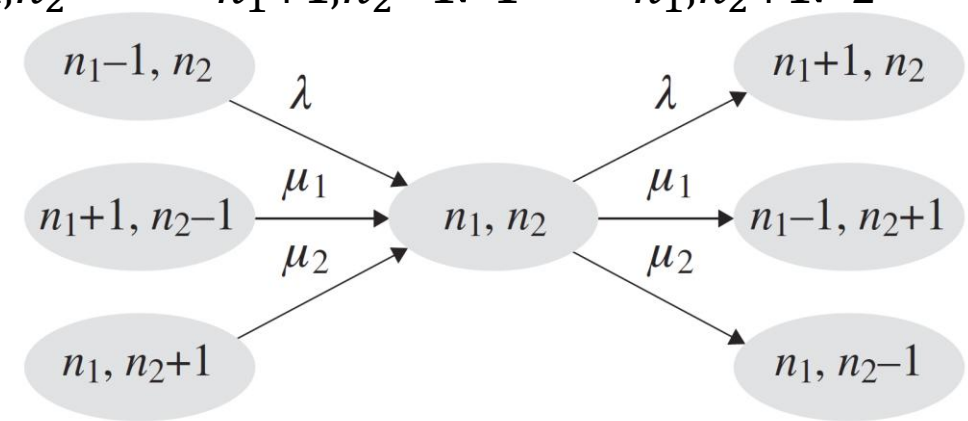

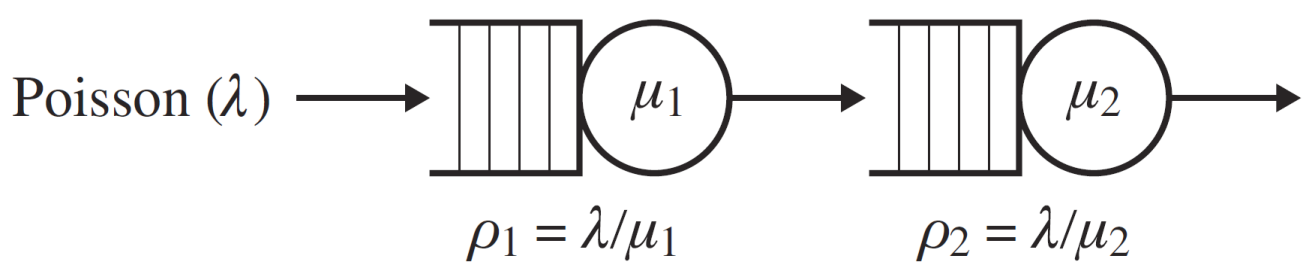

Ref: M. Harchol-Balter, "Performance Modeling and Design of Computer Systems"

Tandem Servers (contd.)

- Recall:
  - ❑ **Theorem**: (Burke's Theorem) The following are true for a stationary M/M/m system with arrival rate λ:
    - a) The departure process is Poisson(λ)
    - b) The number of customers in the system at each time t is independent of the sequence of departure times prior to time t
  - ❑ For $n_1 \geq 1$ and $n_2 \geq 1$, the balance equations are given by:
    - *1)* $P_{n_1,n_2}(\lambda + \mu_1 + \mu_2) = P_{n_1-1,n_2}\lambda + P_{n_1+1,n_2-1}\mu_1 + P_{n_1,n_2+1}\mu_2$
- By part a) of Burke's theorem, the arrival stream into queue 2 is Poisson(λ)
- Hence, each of the two queues is an M/M/1 system with arrival rate λ
- Let $N_i(t)$ be number of customers in system $i \in \{1,2\}$ at time t
- Then:
  - ❑ $\lim_{t\to\infty} P(N_i(t) = n_i) = \rho_i^{n_i}(1-\rho_i)$, for $i \in \{1,2\}$, where $\rho_i = \frac{\lambda}{\mu_i}$
- By part b) of Burke's theorem, sequence of arrivals into system 2 prior to time t is independent of $N_1(t)$
- Since $N_2(t)$ is completely determined by sequence of arrivals into system 2 prior to time t, it follows that:
  - ❑ $N_1(t)$ and $N_2(t)$ are independent for all t
- So, limiting probabilities of overall system are given by:

2) $P_{n_1,n_2} = \rho_1^{n_1}(1-\rho_1)\rho_2^{n_2}(1-\rho_2)$

- As an alternative proof, it can be verified that P_{n_1,n_2} given by 2) satisfy the balance equations in 1)

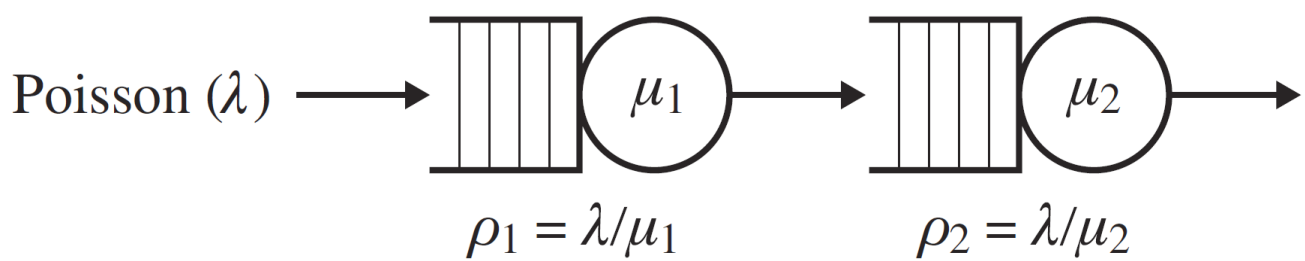

Ref: M. Harchol-Balter, "Performance Modeling and Design of Computer Systems"

Example

- Which of the two systems in Fig. has better performance in terms of average waiting time in system?
- For both systems:
  - ❑ $L = E[N_1] + E[N_2] = \frac{\rho_1}{1-\rho_1} + \frac{\rho_2}{1-\rho_2}$,
  - ❑ where $\rho_1 = \frac{\lambda}{3}$ and $\rho_2 = \frac{\lambda}{6}$
- So, by Little's law, average waiting time in system is same for both systems

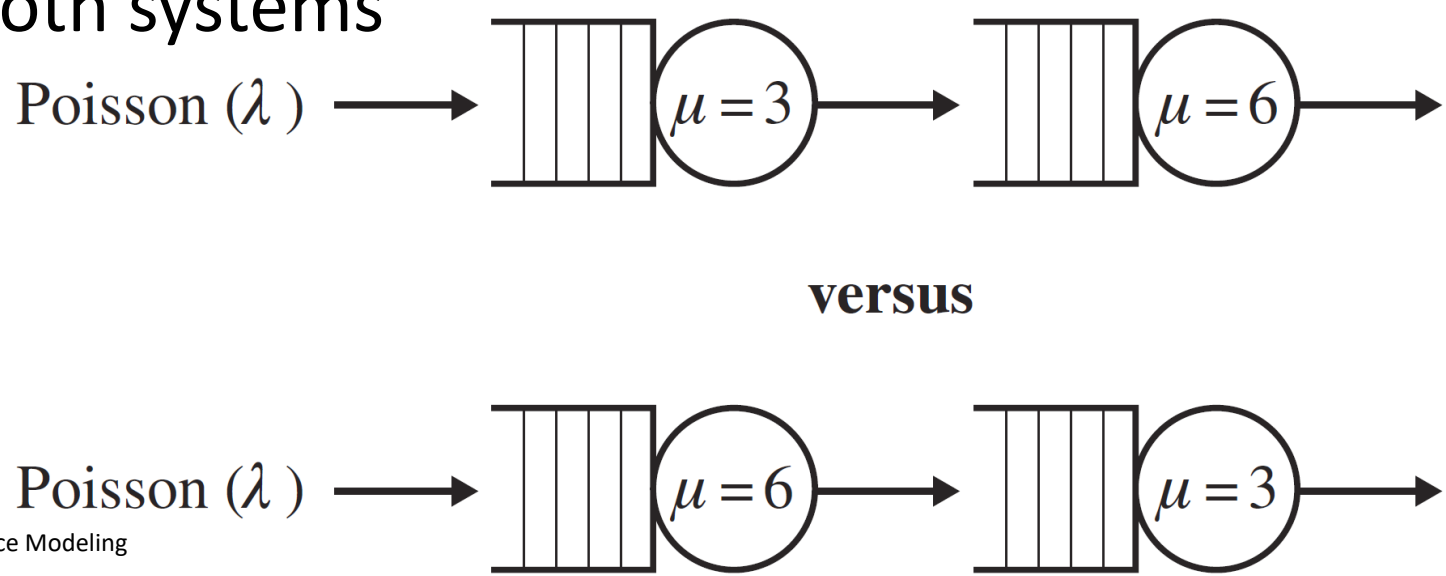

Ref: M. Harchol-Balter, "Performance Modeling and Design of Computer Systems"

Open Queueing Networks

- Consider a network of K first-come first-serve, single-server queues in which (see Fig.):
  - ❑ customers arrive from outside the network at each queue i in accordance with independent Poisson processes at rate r_i
- We allow $r_i = 0$, in which case there are no external arrivals at queue i
- However, we require that $r_i > 0$ for at least one i
- Once a customer is served at queue i, it proceeds:
  - ❑ to join queue $j \in \{1, \dots, K\}$ w.p. P_{ij}, or
  - ❑ to exit the network w.p. $1 - \sum_{j=1}^{K} P_{ij}$
- We allow the network to be *cyclic*, i.e.:
  - ❑ probability that a customer visits the same queue twice may be positive
- Total arrival rates λ_j, $j \in \{1, \dots, K\}$, can be obtained by solving the following system of equations:

  1) $\lambda_j = r_j + \sum_{i=1}^{K} \lambda_i P_{ij}$, for $j \in \{1, \dots, K\}$
- System in 1) is a linear system of equations with the K unknowns λ_j, $j \in \{1, \dots, K\}$

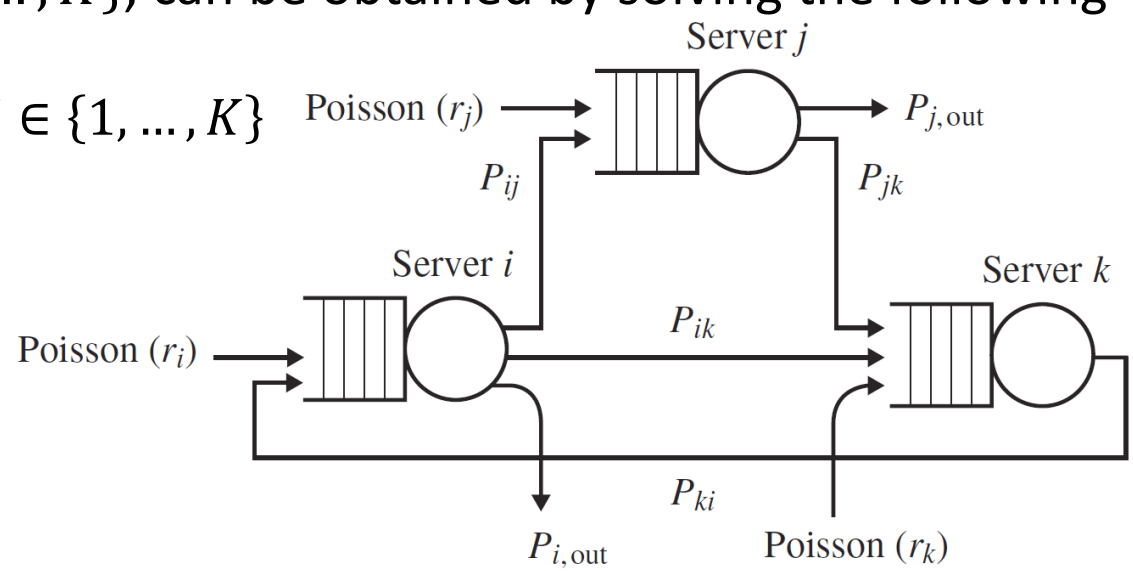

Ref: M. Harchol-Balter, "Performance Modeling and Design of Computer Systems"

Open Queueing Networks (contd.)

- Recall: total arrival rates λ_j, $j \in \{1, \dots, K\}$, can be obtained by solving the following system of equations:

  1) $\lambda_j = r_j + \sum_{i=1}^{K} \lambda_i P_{ij}$, for $j \in \{1, \dots, K\}$
- We assume that:
  - ❑ for every queue i_1, there is a queue i with $1 - \sum_{j=1}^{K} P_{ij} > 0$ and a sequence $i_1, i_2, \dots, i_k, i$ such that $P_{i_1,i_2} > 0, \dots, P_{i_{k-1},i_k} > 0, P_{i_k,i} > 0$
  - ❑ i.e., each customer eventually exits the system w.p. 1
- It can be shown that under this assumption, the system 1) has a unique solution λ_j, $j \in \{1, \dots, K\}$ (proof omitted)
- Service times of customers at jth queue are assumed to be exponentially distributed with rate μ_j and are:
  - ❑ mutually independent, and
  - ❑ independent of arrival process at the queue
- Let $\rho_j = \dfrac{\lambda_j}{\mu_j}$, for $j \in \{1, \dots, K\}$
- We assume that $\rho_j < 1$ for all $j \in \{1, \dots, K\}$
- Above network is called an *open* queueing network, since customers can arrive into and depart from the network

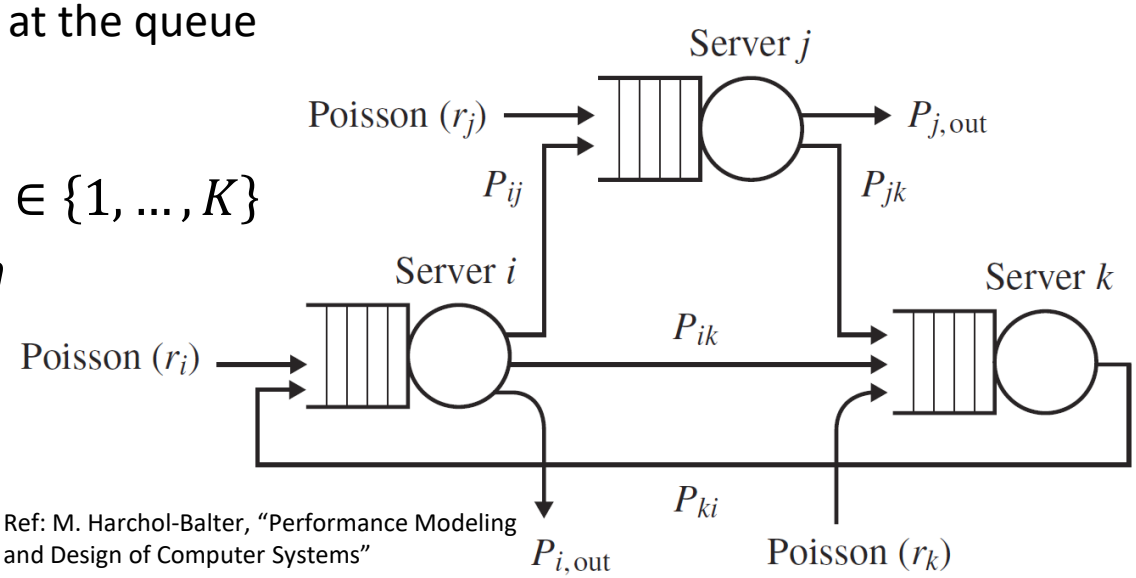

Ref: M. Harchol-Balter, "Performance Modeling and Design of Computer Systems"

Open Queueing Networks (contd.)

- Above system is a CTMC in which state is:
  - $n = (n_1, \dots, n_K)$,
  - where n_i is number of customers at queue i
- Possible successor states of a given state $n = (n_1, \dots, n_K)$ correspond to a single customer arrival and/ or departure
- In particular, transition rate from n to state:
  - $n(j^+) = (n_1, \dots, n_{j-1}, n_j + 1, n_{j+1}, \dots, n_K)$, corresponding to external arrival at queue j, has transition rate $q_{n,n(j^+)} = r_j$,
  - $n(j^-) = (n_1, \dots, n_{j-1}, n_j - 1, n_{j+1}, \dots, n_K)$, corresponding to departure from queue j to the outside, has transition rate $q_{n,n(j^-)} = \mu_j \left(1 - \sum_{i=1}^{K} P_{ji}\right)$,
  - $n(i^+, j^-) = (n_1, \dots, n_{i-1}, n_i + 1, n_{i+1}, \dots, n_{j-1}, n_j - 1, n_{j+1}, \dots, n_K)$, corresponding to a customer moving from queue j to queue i, has transition rate $q_{n,n(i^+,j^-)} = \mu_j P_{ji}$
- Let $P(n_1, \dots, n_K)$ denote the stationary distribution of above CTMC

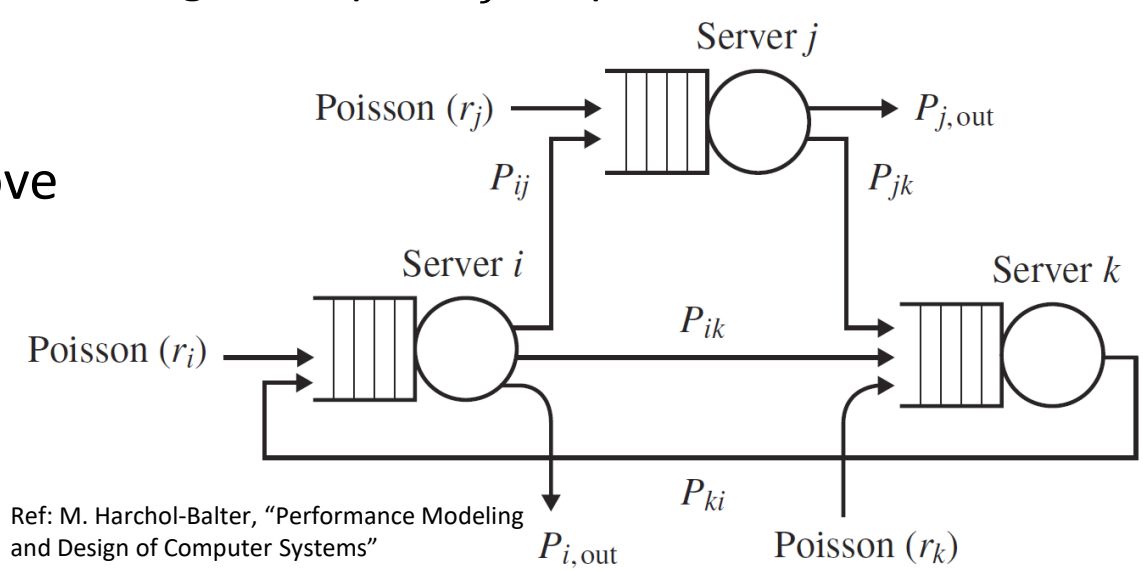

Ref: M. Harchol-Balter, "Performance Modeling and Design of Computer Systems"

Open Queueing Networks (contd.)

- Recall:
  - ❑ Above system is a CTMC in which state is:
    - $n = (n_1, \dots, n_K)$,
    - where n_i is number of customers at queue i
  - ❑ $P(n_1, \dots, n_K)$ denotes the stationary distribution of above CTMC
- **Theorem:** (Jackson's Theorem) Assuming that $\rho_j < 1$ for all $j \in \{1, \dots, K\}$, we have that for all $n_1, \dots, n_K \geq 0$:
  - ❑ $P(n) = P_1(n_1)P_2(n_2) \dots P_K(n_K)$,

  where $n = (n_1, \dots, n_K)$ and:
  - ❑ $P_j(n_j) = \rho_j^{n_j}(1 - \rho_j)$, for $n_j \geq 0$
- We omit the proof
- Jackson's theorem says that numbers of customers in the system's queues are distributed as if each queue is M/M/1 and is independent of the other queues
- However, the total arrival process at each queue need not be Poisson, as shown by following example

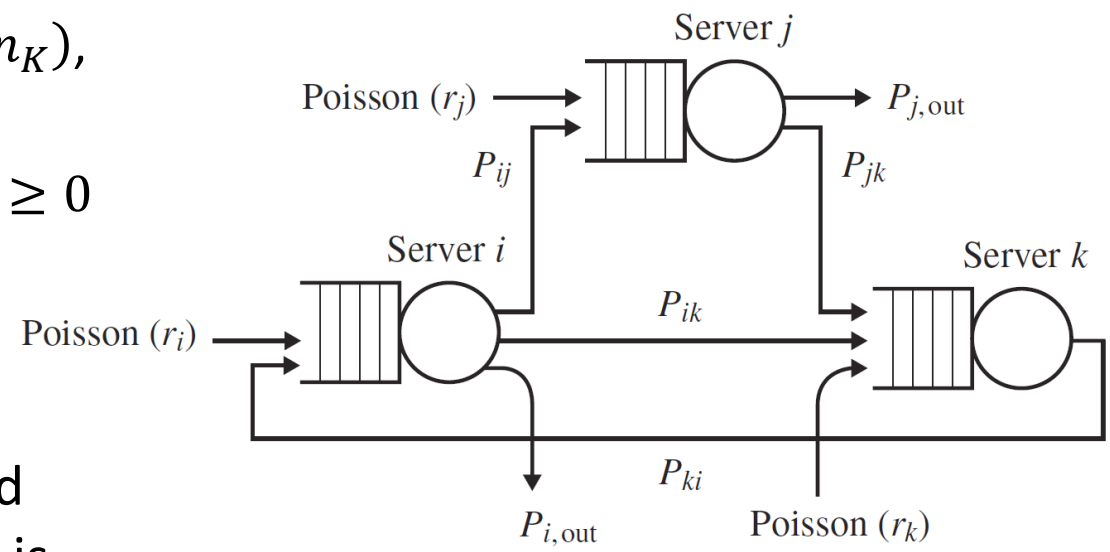

Ref: M. Harchol-Balter, "Performance Modeling and Design of Computer Systems"

Example 1

- As shown in fig., there is a single queue with service rate which is very large relative to arrival rate from outside
- Also, w.p. p, which is close to 1, a customer upon completion of service is fed back into the queue
- When an arrival occurs at the queue, there is a large probability of another arrival at the queue in a short time (i.e., the feedback arrival)
- In contrast, at an arbitrary time, there will be only a very slight chance of an arrival occurring in a short time since λ is small
- That is, queue arrivals tend to occur in bursts triggered by the arrival of a single customer from the outside
- Hence, the queue arrival process does not have independent increments and cannot be Poisson

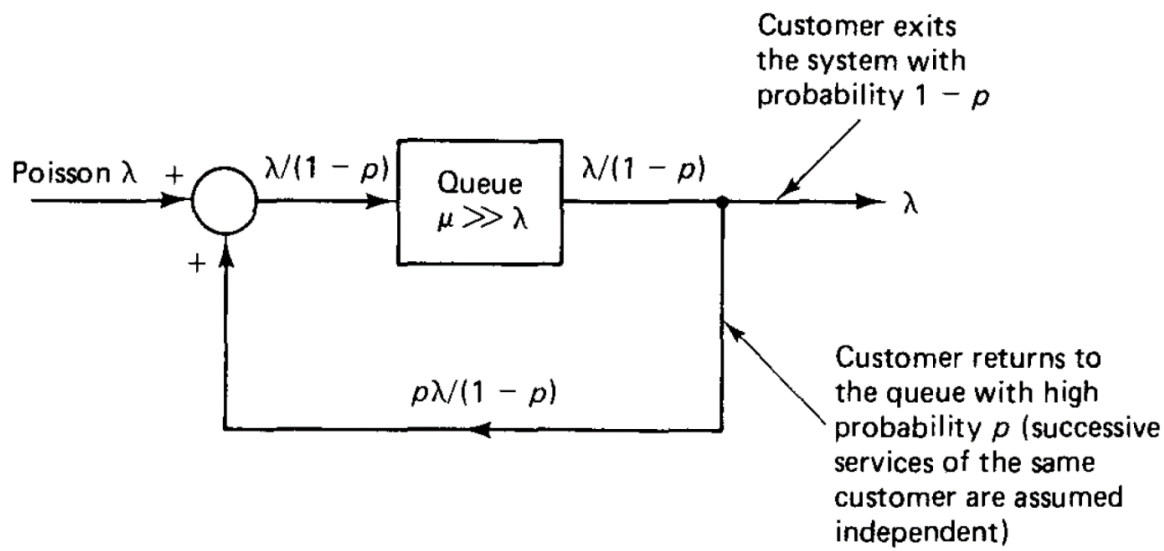

Ref: D. Bertsekas and R. Gallager, "Data Networks"

Example 2

- Consider a model of a computer CPU connected to an I/O device as shown in Fig. (a)
- Process of external arrivals into system is Poisson with rate λ, and service time of CPU is $\exp(\mu_1)$
- Upon exiting the CPU, a job:
  - ❑ w.p. p_1, exits the system, and
  - ❑ w.p. $p_2 = 1 - p_1$, uses the I/O device for a time that is $\exp(\mu_2)$
- Upon exit from the I/O device, a job again joins CPU queue
- We assume that all service times, including successive service times of the same job at the CPU or the I/O device, are independent

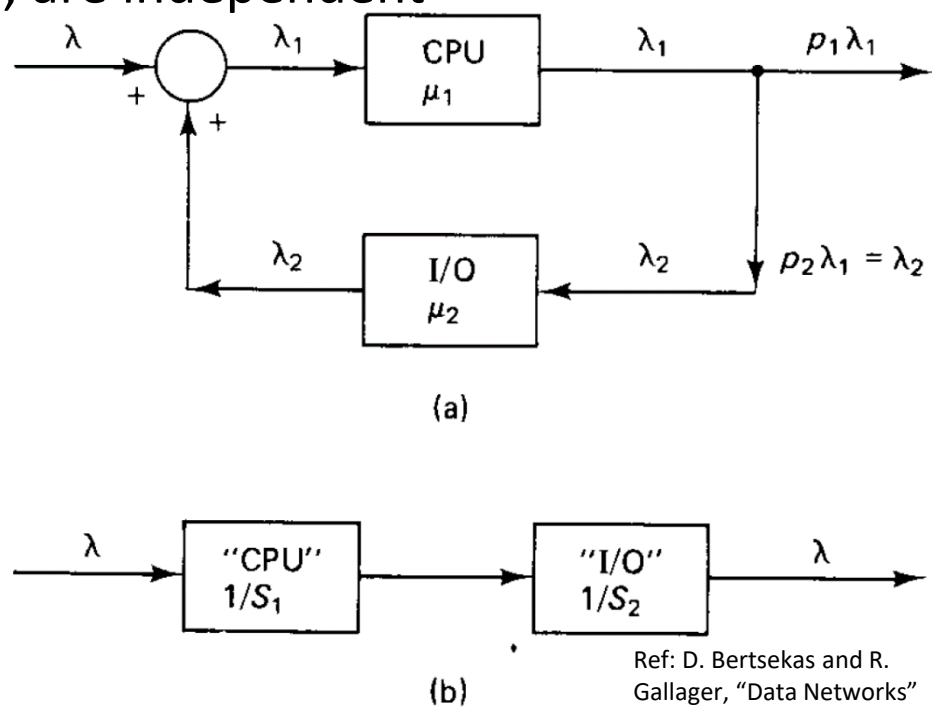

- Arrival rates, λ_1 and λ_2, at CPU and I/O device queues, can be obtained by solving following system of equations:
  1) $\lambda_1 = \lambda + \lambda_2$ and $\lambda_2 = p_2\lambda_1$
- Solving the system 1), we get:
  2) $\lambda_1 = \frac{\lambda}{p_1}$ and $\lambda_2 = \frac{\lambda p_2}{p_1}$
- Let $\rho_j = \frac{\lambda_j}{\mu_j}$, for $j \in \{1,2\}$

Ref: D. Bertsekas and R. Gallager, "Data Networks"

Example 2 (contd.)

- Limiting probabilities of the system are given by Jackson's theorem:
  - $P(n_1, n_2) = \rho_1^{n_1}(1-\rho_1)\,\rho_2^{n_2}(1-\rho_2)$
- Average number of jobs, L_j, in the jth queue is the same as for an M/M/1 system with utilization factor ρ_j, i.e.:
  - $L_j = \frac{\rho_j}{1-\rho_j}$, for $j \in \{1,2\}$
- Average total number in the system:
  - $L = L_1 + L_2 = \frac{\rho_1}{1-\rho_1} + \frac{\rho_2}{1-\rho_2}$
- Average waiting time in system:
  - $w = \frac{L}{\lambda} = \frac{\rho_1}{\lambda(1-\rho_1)} + \frac{\rho_2}{\lambda(1-\rho_2)}$

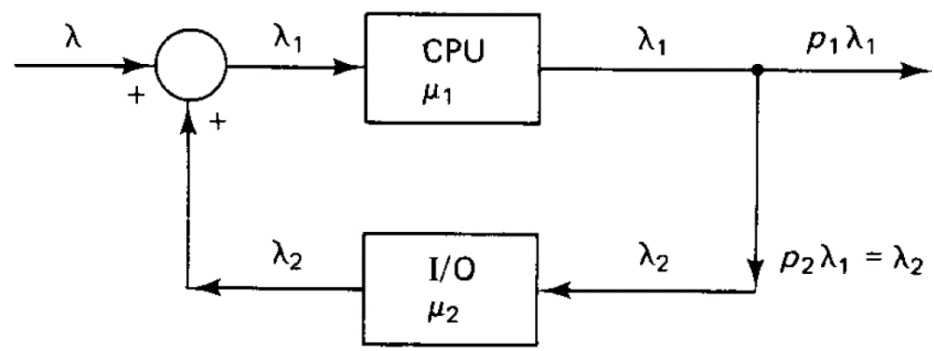

(a)

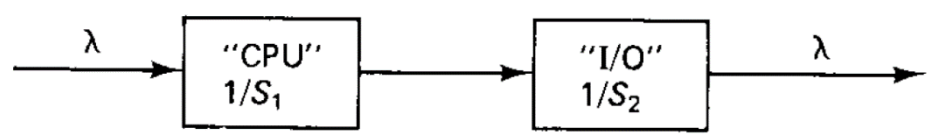

(b)

Ref: D. Bertsekas and R. Gallager, "Data Networks"

Example 2 (contd.)

- Recall:

  2) $\lambda_1 = \frac{\lambda}{p_1}$ and $\lambda_2 = \frac{\lambda p_2}{p_1}$

  ❑ $\rho_j = \frac{\lambda_j}{\mu_j}$, for $j \in \{1,2\}$

  ❑ Average waiting time in system:

  ○ $w = \frac{L}{\lambda} = \frac{\rho_1}{\lambda(1-\rho_1)} + \frac{\rho_2}{\lambda(1-\rho_2)}$

- Substituting $\rho_j = \frac{\lambda_j}{\mu_j}$ for $j \in \{1,2\}$, using 2), and simplifying, we get:

  3) $w = \frac{1}{\frac{1}{S_1}-\lambda} + \frac{1}{\frac{1}{S_2}-\lambda}$,

  4) where $S_1 = \frac{1}{\mu_1 p_1}$ and $S_2 = \frac{p_2}{\mu_2 p_1}$

- Note that:

  ❑the utilization factor of CPU queue is $\rho_1 = \frac{\lambda_1}{\mu_1} = \frac{\lambda}{\mu_1 p_1}$,

  ❑and the arrival rate of new job arrivals at CPU (as opposed to feedback arrivals) is λ

- Hence, by Little's theorem, S_1 is the total CPU time a job requires on the average; this includes all visits of the job to the CPU

- Similarly, S_2 is the total I/O time a job requires on the average

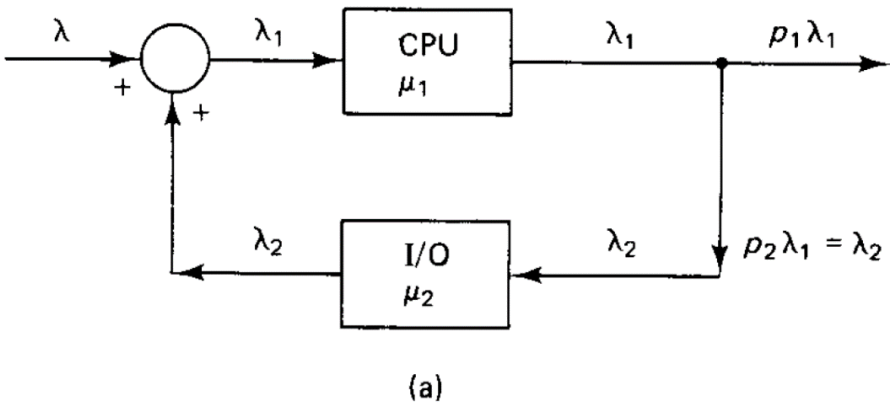

(a)

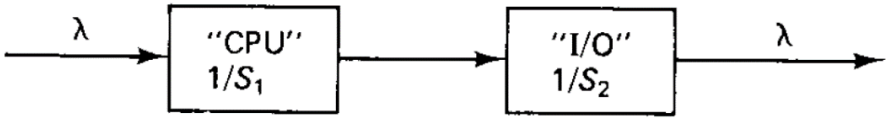

(b)

Ref: D. Bertsekas and R. Gallager, "Data Networks"

Example 2 (contd.)

- Recall:

  3) $w = \frac{1}{\frac{1}{S_1}-\lambda} + \frac{1}{\frac{1}{S_2}-\lambda}$,

  4) where $S_1 = \frac{1}{\mu_1 p_1}$ and $S_2 = \frac{p_2}{\mu_2 p_1}$

- Interpretation of 3) and 4):
  - ❑ average number of jobs and average time in system are same as in an "equivalent" tandem model of CPU and I/O queues with service rates $\frac{1}{S_1}$ and $\frac{1}{S_2}$, respectively, as shown in Fig. (b)
- However, probability density function of time in the system is not the same in the feedback and tandem systems, e.g.:

❑Suppose that $p_1 = p_2 = \frac{1}{2}$ and $\mu_1 \gg \mu_2$

❑Then half the jobs in the feedback system do not require any I/O service and their average time in system is much smaller than average time of the other half

❑This is not so in the tandem system, where the average job time in the "CPU" queue is very small and the system time is distributed approximately as in the "I/O" queue, i.e., as in an M/M/1 queue with Poisson rate λ and service rate $\frac{1}{S_2}$

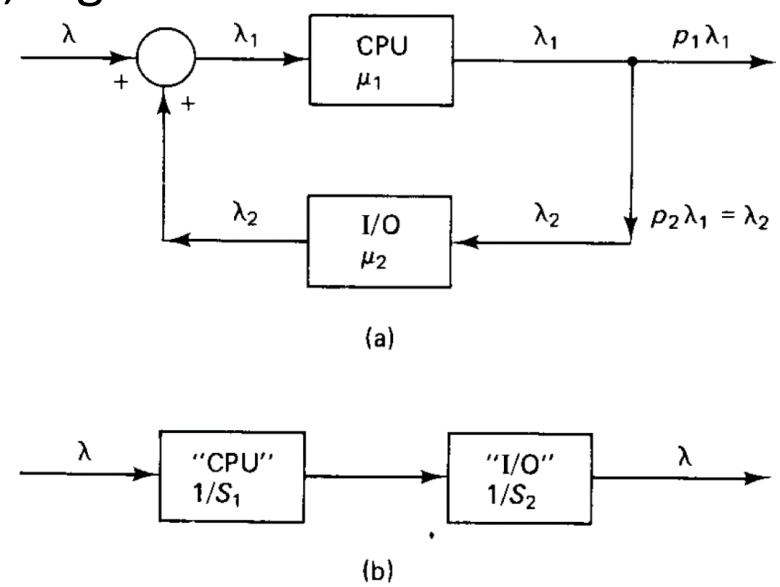

Ref: D. Bertsekas and R. Gallager, "Data Networks"

Closed Queueing Networks

- Closed queueing networks are those in which total number of customers is fixed (fig. shows an example):
  - no customers are allowed to arrive into or depart from network
- Let:
  - M be the fixed number of customers in the system
  - P_{ij} be the routing probability that a customer that departs from queue i will next visit queue j
- Since no customer can exit the system:
  - $\sum_{j=1}^{K} P_{ij} = 1$, for $i \in \{1, \dots, K\}$
- Let μ_j be service rate at jth queue
- Arrival rates satisfy following equations:
  1) $\lambda_j = \sum_{i=1}^{K} \lambda_i P_{ij}$, for $j \in \{1, \dots, K\}$

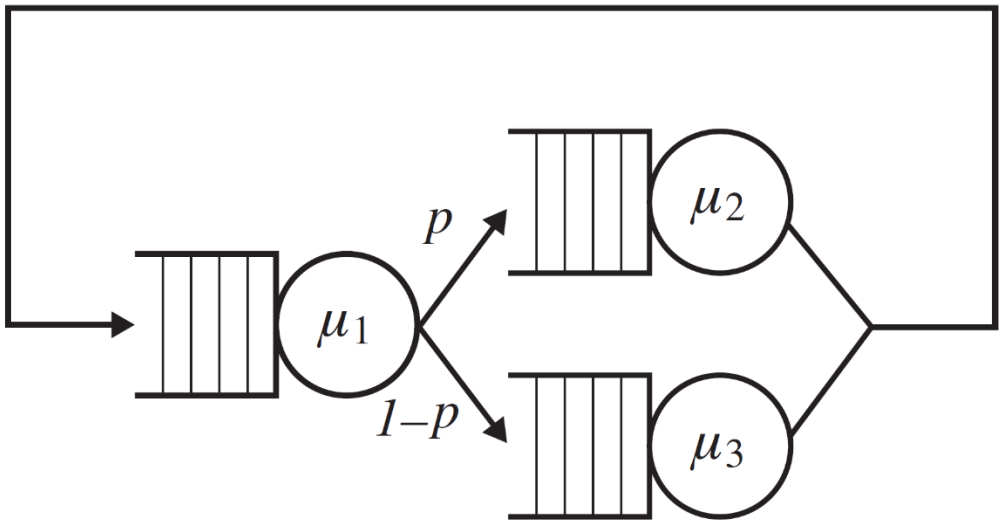

Ref: M. Harchol-Balter, "Performance Modeling and Design of Computer Systems"

Closed Queueing Networks (contd.)

- Recall: arrival rates satisfy following equations:

  1) $\lambda_j = \sum_{i=1}^{K} \lambda_i P_{ij}$, for $j \in \{1, \dots, K\}$
- The system 1) does not have a unique solution
- Assume that the DTMC with states $1, \dots, K$ and transition probabilities P_{ij} is irreducible:
  - then it can be shown that solution of 1) is unique up to a multiplicative constant (proof omitted)
- In particular, all solutions λ_j, $j \in \{1, \dots, K\}$, of 1) are of the form:
  - $\lambda_j = \alpha \bar{\lambda}_j$,
  - where $\bar{\lambda}_j > 0$ for all $j \in \{1, \dots, K\}$

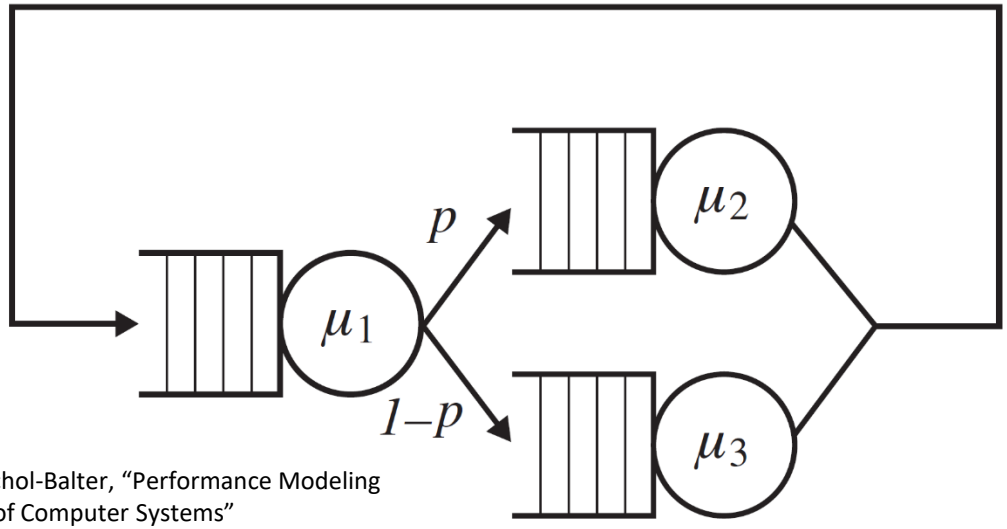

Ref: M. Harchol-Balter, "Performance Modeling and Design of Computer Systems"

Closed Queueing Networks (contd.)

- Recall: arrival rates satisfy following equations:

  1) $\lambda_j = \sum_{i=1}^{K} \lambda_i P_{ij}$, for $j \in \{1, \dots, K\}$

- Let:

  2) $\rho_j = \frac{\lambda_j}{\mu_j}$, for $j \in \{1, \dots, K\}$,

  ❑ where $\left\{\lambda_j \mid j \in \{1, \dots, K\}\right\}$ is any positive solution of the system 1)

- Let:

  3) $G(M) = \sum_{\{(n_1,\dots,n_K) \mid n_1+\cdots+n_K=M\}} \rho_1^{n_1} \dots \rho_K^{n_K}$

- **Theorem**: (Jackson's Theorem for Closed Networks) For state $n = (n_1, \dots, n_K)$ with $n_1 + \cdots + n_K = M$, the limiting probability is:

  4) $P(n) = \frac{\rho_1^{n_1} \dots \rho_K^{n_K}}{G(M)}$

- We omit the proof
- Note that the expression in 4) is independent of which particular solution to the system 1) is selected

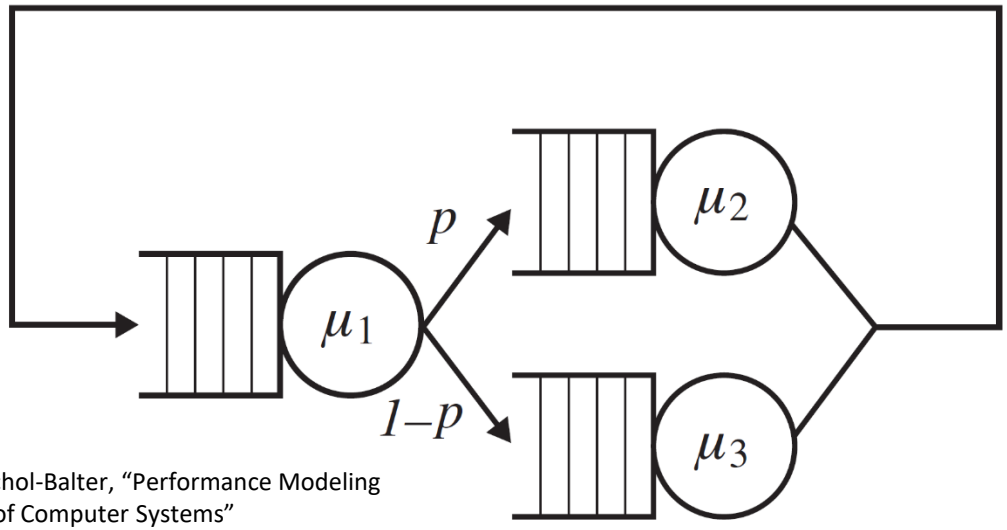

Ref: M. Harchol-Balter, "Performance Modeling and Design of Computer Systems"

Example 1

- Consider the system shown in Fig.
- There are M jobs in the system
- Want to find limiting probabilities and CPU utilization factor
- Arrival rates satisfy following equations:
  1) $\lambda_2 = p_2\lambda_1$ and $\lambda_1 = \lambda_2 + p_1\lambda_1$
- We select the following solution of 1):
  - $\lambda_1 = \mu_1$ and $\lambda_2 = p_2\mu_1$
- We have:
  - $\rho_1 = 1$ and $\rho_2 = \frac{p_2\mu_1}{\mu_2}$
- Note that the CPU utilization factor is *not* $\rho_1 = 1$, because it was derived using an arbitrarily selected value of λ_j, $j \in \{1,2\}$
- Limiting probabilities of the system:
  - $P(M-n, n) = \frac{\rho_2^n}{G(M)}$, for $n \in \{0,1,\dots,M\}$,
  - where $G(M) = \sum_{n=0}^{M} \rho_2^n$
- CPU utilization factor is:
  - $U(M) = 1 - P(0, M)$
  - $= 1 - \frac{\rho_2^M}{G(M)}$
  - $= \frac{G(M-1)}{G(M)}$

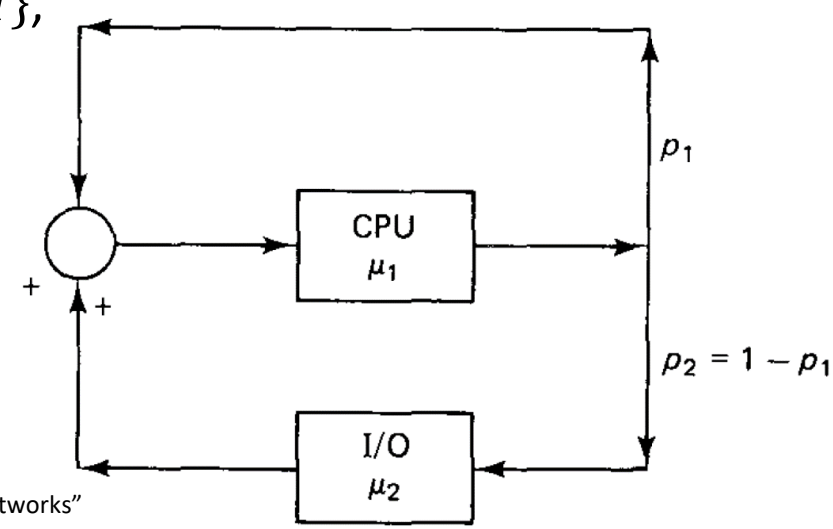

Ref: D. Bertsekas and R. Gallager, "Data Networks"

Example 2

- Consider the closed queueing network shown in Fig., where:
  - $M = 2, \mu_1 = 1, \mu_2 = 2, \mu_3 = 3$, and $p = \frac{1}{3}$
- Want to find:
  - limiting probabilities,
  - expected number of jobs at server 1, and
  - utilization of server 1
- Arrival rates satisfy following equations:

  1) $\lambda_1 = \lambda_2 + \lambda_3$

  2) $\lambda_2 = \frac{1}{3}\lambda_1$

  3) $\lambda_3 = \frac{2}{3}\lambda_1$
- We arbitrarily select $\lambda_1 = 1$
- So, by 2) and 3):
  - $\lambda_2 = \frac{1}{3}$ and $\lambda_3 = \frac{2}{3}$
- Hence:

  4) $\rho_1 = 1, \rho_2 = \frac{1}{6}$, and $\rho_3 = \frac{2}{9}$
- Note that quantities in 4) are *not* the utilizations of the servers since they were derived using arbitrarily selected value for λ_1
- $G(2)$:
  - $\rho_1^0\rho_2^0\rho_3^2 + \rho_1^0\rho_2^2\rho_3^0 + \rho_1^2\rho_2^0\rho_3^0 + \rho_1^1\rho_2^0\rho_3^1 + \rho_1^1\rho_2^1\rho_3^0 + \rho_1^0\rho_2^1\rho_3^1$
  - 1.5031
- Limiting probabilities:
  - $P(0,0,2) = \frac{\rho_1^0\rho_2^0\rho_3^2}{G(2)} = 0.033$
  - $P(0,2,0) = \frac{\rho_1^0\rho_2^2\rho_3^0}{G(2)} = 0.018$
  - $P(2,0,0) = \frac{\rho_1^2\rho_2^0\rho_3^0}{G(2)} = 0.665$
  - $P(1,0,1) = \frac{\rho_1^1\rho_2^0\rho_3^1}{G(2)} = 0.148$
  - $P(1,1,0) = \frac{\rho_1^1\rho_2^1\rho_3^0}{G(2)} = 0.111$
  - $P(0,1,1) = \frac{\rho_1^0\rho_2^1\rho_3^1}{G(2)} = 0.025$
- $E[\text{number at server 1}]$:
  - $P(1,0,1) + P(1,1,0) + 2P(2,0,0)$
  - 1.589
- Utilization of server 1:
  - $1 - P(0,0,2) - P(0,2,0) - P(0,1,1)$
  - 0.924

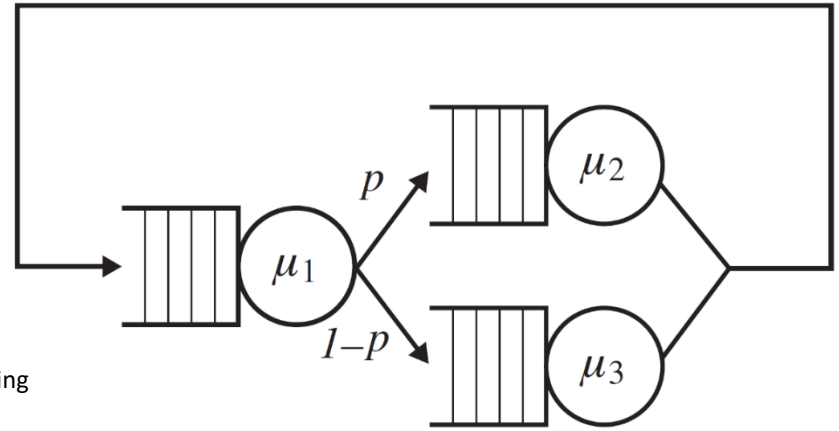

Ref: M. Harchol-Balter, "Performance Modeling and Design of Computer Systems"