2 INTEGRATE AND FIRE MODEL

Using the Hodgkin-Huxley model, we have seen that a neuron, starting from a resting potential, (in the following indicated with E_0) fires an action potential (or more briefly a "spike") when its membrane potential reaches a threshold value (hereinafter V_t). Typical values of the resting potential and the threshold are E_0 = - 70 mV, V_{th} = - 55 mV, although these values vary from neuron to neuron. Furthermore, we have seen that, during the development of an action potential, the potential follows a stereotyped form. Taking these elements into account, it is possible to formulate a model of a neuron that produces spikes ("spiking neuron" in the Anglo-Saxon literature) using very simplified equations. The basic idea is as follows:

i) for values of $V < V_t$,, the neuron simply behaves as a capacitance that is discharged or charged through a resistance; in this region of behavior, in fact, the opening of the sodium channels, described through the variable *m* (which, remember, represents the element triggering the action potential) still has negligible effects on the overall dynamics. Of course, the other variables (*n*, *h*), characterized by slower dynamics, are almost constant. This is the sub-threshold region, well highlighted in the two previous second order models (see Chapter 1) with a rapid return of the trajectories towards the equilibrium point. Therefore, for such values of *V*, it is sufficient to describe the neuron with a simple capacity-resistance parallel, without taking into account the opening of the voltage-dependent channels.

ii) for values of $V > V_t$, the dynamics of the ion channels become fundamental. However, since the shape of the action potential is stereotyped, it is possible to drastically simplify the model by generating a spike of a fixed shape, and to reset the neuron to a reset potential (hereinafter, V_r). The reset potential practically coincides with the rest potential E_0 but, for completeness, in the following discussion we will consider these two parameters as distinct.

The model based on the two previous assumptions is called "integrate and fire" precisely because it consists of a simple integrator with losses (the RC circuit) which integrates the current, followed by the generation of a spike of assigned shape.

The corresponding circuit is shown in the following figure:

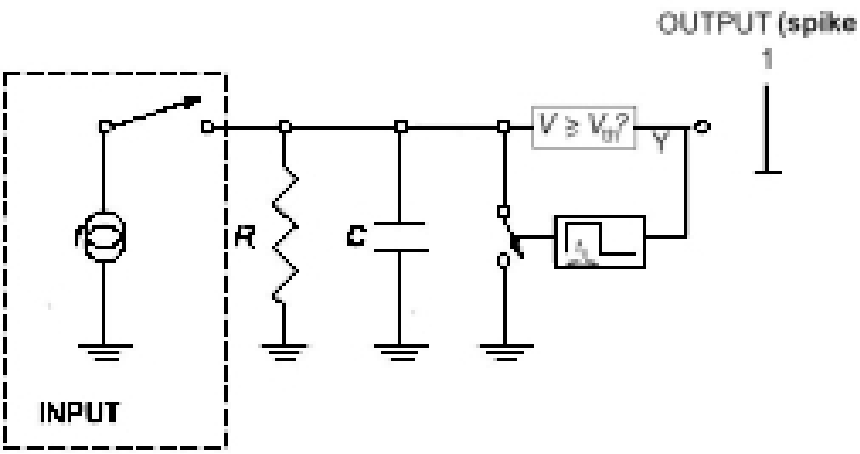

Schematic diagram of the integrate and fire model: the input is integrated by an RC circuit; when a threshold value is reached, a spike is generated and the capacity is discharged. Note that, in the figure, the equilibrium potential is assumed at zero (i.e., this is a variation model).

2.1 Electrical equivalent of the neuron below threshold

The first step in building the integrate and fire model is to simplify the Hodgkin-Huxley model, in order to consider its behavior below threshold. In practice, since we are interested only in the sub-threshold behavior, when alla conductances are still practically constant, it is possible to switch from the electrical analog represented by the panel at the top in the following figure, to the electrical analog represented in the panel at the bottom. Note that, in the complete analogue at the top, we also introduced chloride channels, although they were not explicitly considered in the H.H. model.

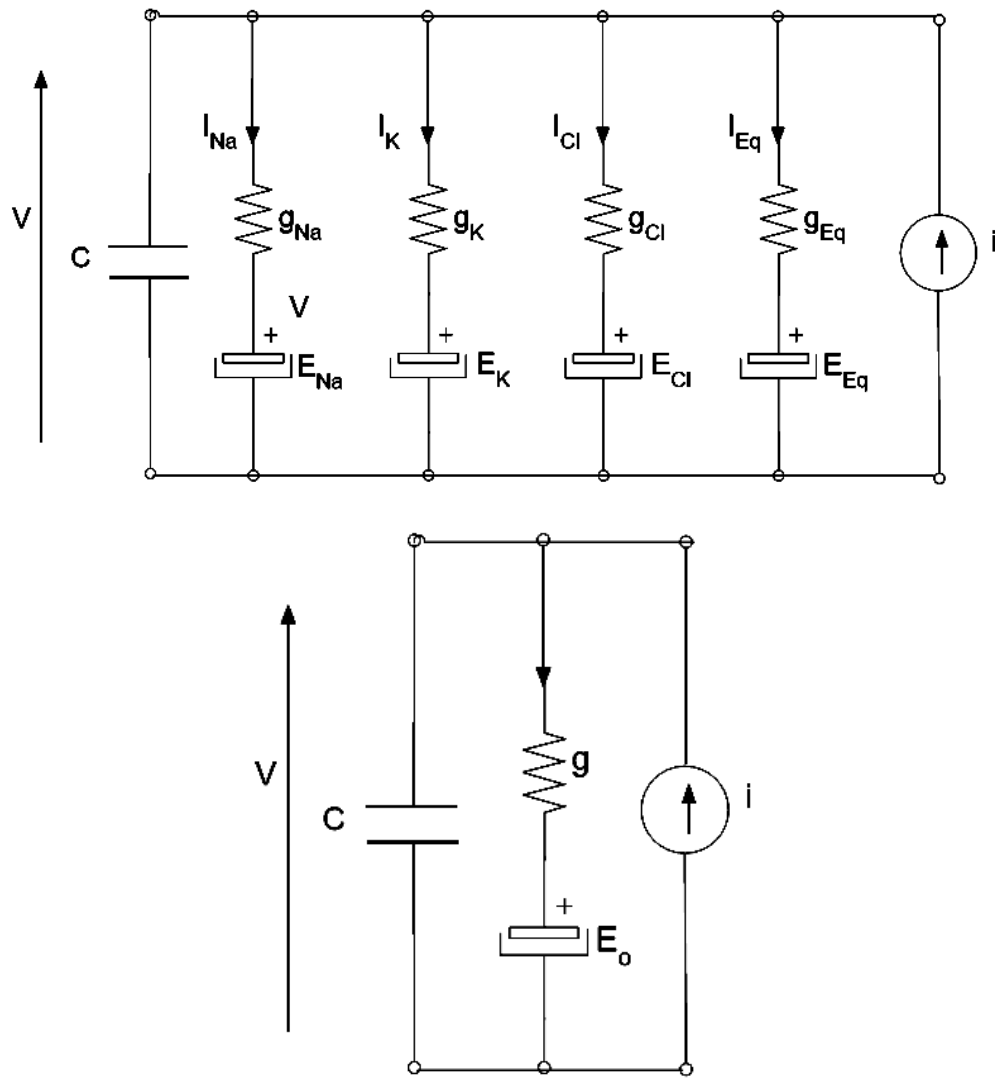

Electrical analog of the membrane, in which the different ion channels appear (above) and a simplified model, to be used below threshold, where all channels are combined together (below).

To move from one electric analog to the other, it is sufficient to write the corresponding equations (by considering all conductances constant since below threshold) and then equate the equivalent terms. We have

Complete model:

$$C\frac{dV}{dt} + g_{NA}(V - E_{Na}) + g_k(V - E_k) + g_{cl}(V - E_{cl}) + g_{eq}(V - E_{eq}) = i \qquad (1)$$

Simplified model:

$$C\frac{dV}{dt}+g(V-E_0)=i \tag{2}$$

where the parameter g is named the **membrane conductance**, and E_0 represents the potential at equilibrium (i.e., the value of the potential in steady state conditions when no external current is applied to the membrane).

Equalizing the left-hand members of Eqs. (1) and (2) (i.e. by equating the multiplicative coefficient of V and the known term) we obtain:

$$g = g_{NA} + g_k + g_{cl} + g_{eq} \tag{3}$$

$$gE_0 = g_{NA}E_{Na} + g_kE_k + g_{cl}E_{cl} + g_{eq}E_{eq}$$

from which

$$E_0 = \frac{g_{NA}E_{Na} + g_kE_k + g_{cl}E_{cl} + g_{eq}E_{eq}}{g_{NA} + g_k + g_{cl} + g_{eq}} \tag{4}$$

The Eqs. (3) and (4) allow us to obtain the simplified electrical diagram, on which we will work in the integrate and fire model.

The model therefore consists in equation (2), below threshold, and in the genesis of a stereotyped spike as soon as the voltage V reaches the threshold value, with subsequent reset of the potential.

2.2 The integrate and fire model with a constant current

A very simple case, in which the solution of the problem can be obtained analytically, occurs when the current that stimulates the neuron is constant. In this case, in fact, below the threshold equation (2) presents an analytical solution.

First of all, we can rewrite the equation as follows

$$\tau\frac{dV}{dt} = -V + E_0 + ri \tag{5}$$

where we have set $r = 1/g$ (membrane resistance) and $\tau = rC$ (time constant of the membrane). In the case of a constant current, Eq. (5) admits the following solution

$$V(t) = (V_0 - V_\infty)\exp\left(-\frac{t-t_0}{\tau}\right) + V_\infty \tag{6}$$

with $V_0 = V(t_0)$ e $V_\infty = E_0 + ri$.

Using solution (6), and assuming for simplicity that the spike has a negligible duration (instantaneous) and that, therefore, the reset occurs instantaneously, we want to calculate at what frequency the neuron fires, subjected to a constant current of value i. Suppose that at the instant t_0 the neuron has just reset and indicate with V_r the reset voltage. Let us also suppose that after a time T the potential of the neuron reaches the threshold value, V_t, and that therefore the neuron produces an

instantaneous spike. At steady state, assuming a constant current, these events will repeat themselves periodically, generating a sequence of spikes with period T. The discharge frequency will therefore be $f = 1/T$. Using the previous assumptions within Eq. (6), we can write:

$$V(t+T) = V_t = (V_r - V_\infty)\exp\left(-\frac{t_0 + T - t_0}{\tau}\right) + V_\infty$$

from which, by introducing the expression of V_∞, in which the current explicitly appears, we get:

$$\exp\left(-\frac{T}{\tau}\right) = \frac{V_t - E_0 - r\,i}{V_r - E_0 - r\,i} = \frac{E_0 + r\,i - V_t}{E_0 + r\,i - V_r} \tag{7}$$

The sign at the numerator and denominator has been changed to take into account the following inequalities, which surely hold when a neuron is firing: $V_\infty > V_t > V_r$. Finally, from (7) we obtain

$$T = -\tau \ln\left(\frac{E_0 + r\,i - V_t}{E_0 + r\,i - V_r}\right) = \tau \ln\left(\frac{E_0 + r\,i - V_r}{E_0 + r\,i - V_t}\right) \tag{8}$$

Note the inversion of the numerator and denominator in the last member of (8), justified by the fact that $V_r < V_t$. Solution (8) has a physical meaning only if T is positive. This happens when the asymptotic value of the voltage exceeds the threshold value, that is when $V_\infty = E_0 + r\,i > V_t$ and, therefore:

$$i > \frac{V_t - E_0}{r} = i_t \tag{9}$$

Equation (9) represents a very important phenomenon, in full agreement with what has been seen using the previous neuron models: for the neuron to "shoot" a train of spikes, the current must be higher than a certain threshold current value i_t. In previous models, a Hopf bifurcation occurred at this current value, with the appearance of a stable limit cycle.

The presence of a threshold value for the stimulus, below which the neuron remains silent, is an important property of neurons, with various neurophysiological consequences. In particular, **neurons tend to neglect stimuli with a small amplitude**, a phenomenon that has a clear confirmation in psychometric tests.

Finally, from (8) we can write the expression of the frequency at which the neuron fires, equal to the reciprocal of the period T:

$$f = \frac{1}{T} = \left[\tau \ln\left(\frac{E_0 + r\,i - V_r}{E_0 + r\,i - V_t}\right)\right]^{-1} \qquad \text{con} \quad i > \frac{V_t - E_0}{r} = i_t \tag{10}$$

From the expressions (8) and (10) it can be immediately deduced that $\lim_{i\to\infty} T = 0$ and therefore $\lim_{i\to\infty} f = \infty$. Moreover, it is also possible to obtain the asymptotic expression of f for high values of the current, remembering that, using the Taylor series expansion, the following approximation of the natural logarithm holds in the neighborhood of the value $x = 1$:

$$\ln(x) \cong \ln(1) + \left.\frac{1}{x}\right|_{x=1} (x-1) = x-1 \quad \text{at} \quad x \cong 1$$

By using this approximation of the logarithm within expression (8), and assuming high values for the current, (and so by using $x = \frac{E_0 + r\,i - V_r}{E_0 + r\,i - V_t} \cong 1$) we get

$$T = \tau \ln\left(\frac{E_0 + r\,i - V_r}{E_0 + r\,i - V_t}\right) \cong \tau\left(\frac{E_0 + r\,i - V_r}{E_0 + r\,i - V_t} - 1\right) = \tau \frac{V_t - V_r}{E_0 + r\,i - V_t}$$

Hence, by considering the expression for the spike frequency

$$f \cong \frac{1}{\tau}\frac{E_0 + r\,i - V_t}{V_t - V_r} = \frac{1}{\tau}\frac{r}{V_t - V_r}\left(i - i_t\right) \tag{11}$$

Eq. (11), which only holds for high values of the current, is the expression of a straight line, passing through the point with coordinates (i_t, 0) and slope $\frac{1}{\tau}\frac{r}{V_t - V_r}$.

2.3 Improvements to the integrate and fire model

While the existence of a threshold value for the current, below which the neuron remains silent, is entirely in accord with physiology, the fact that the firing rate increases infinitely as the stimulus increases is not physiological at all. In fact, each neuron, as the stimulus increases (in our case the current i) exhibits a higher saturation, that is, a maximum limit for the discharge rate. In other terms, the real curve of neurons deviates from the straight line predicted by Eq. (11) to strive at a horizontal level.

Let us ask ourselves now why the integrate and fire model examined up to this point fails for high frequency values. The main reasons are basically two:

i) we considered the duration of the spike to be instantaneous. Consequently, as the current increases, the spikes become more and more close together, up to a distance tending to zero. To remedy this defect, it is sufficient to assume a spike of finite duration, that is to maintain the voltage at a high value (zero or slightly positive) before resetting. With this modification, indicating with T_s the duration of a single spike, (8) becomes

$$T = \tau \ln\left(\frac{E_0 + r\,i - V_r}{E_0 + r\,i - V_t}\right) + T_s \tag{12}$$

and so $\lim_{i\to\infty} T = T_s$ and $\lim_{i\to\infty} f = \frac{1}{T_s}$.

For instance, if one assumes a spike duration as long as 1 ms, an upper bound for the maximal spike frequency is 1000 Hz.

ii) However, considering the effective duration of the spike leads to very modest benefits (in fact, 1000 Hz is a far excessive frequency compared to the saturation values presented by normal neurons). In reality, the mechanism which significantly limits the firing rate in real neurons is the presence of refractory times, in particular the absolute refractory time. It is therefore advisable to introduce the presence of refractory time into the integrate and fire model. The simplest way to do this is to consider that the threshold V_t is not constant, but is a dynamic variable.

Let's imagine, therefore, that, in the absence of spikes, the threshold is at its standard value, i.e. a "low" value, which we will denote, from now on, with V_{tL}. Let us also suppose that, when a spike occurs, the threshold is raised to a very high value (V_{tH}), and then allowed to progressively decay towards its base value with a first order dynamics, characterized by a time constant τ_t (time constant of the threshold). The whole can be represented by the following differential equation

$$\tau_t \frac{dV_t}{dt} = -V_t + V_{tL} \tag{13}$$

If we indicate with t_j the instant at which the jth spike occurred (and therefore with t_{j+1} the instant of the next spike), and indicate with V_{tH} the high value of the threshold immediately after the spike (with $V_{tH} > V_{tL}$) , then, between one spike and the next, eq., (13) admits the following solution

$$V_t(t) = (V_{tH} - V_{tL})\exp\left(-\frac{t - t_j}{\tau_t}\right) + V_{tL} \quad \text{per} \quad t_j < t < t_{j+1} \tag{14}$$

The consequence of the use of (13) (or indifferently of (14) which represents the analytical solution) is that, after each spike, the threshold drastically increases, returning to the base value only after two or three time constants. Therefore, it will be much more difficult to produce an action potential and this will take a longer time, limiting the firing rate of the neuron.

2.4 Inclusion of ionic channels within the Integrate and Fire model

In the model described previously, the external stimulus, able to excite the neuron, consisted of a current *i*. Naturally, if the direction of this current is positive, it produces a depolarization, that is, it charges the capacitance C, with an **excitatory** effect. Only if the current exceeds the threshold value (see Eq. (10)) it is able to produce a train of spikes. A negative current discharges the capacity, producing a repolarization of the cell, and therefore prevents the genesis of the action potential and has an **inhibitory** effect.

In the reality, although the presence of currents coming from electrical junctions cannot be excluded, most of the currents that cross the membrane of a neuron are determined by the opening of ion channels.

In particular, the following types of channels can be present in the membrane of a typical neuron:

i) <u>voltage-dependent channels</u>. The opening and closing of the gates is determined by the variations of the membrane potential. We have already seen the following channels in action, in the model of Hodgkin and Huxley,

- ✓ sodium channels
- ✓ potassium channels

They are fundamental for the genesis of the action potential. However, another class of voltage dependent channel is also present in the neuron membrane:

- ✓ calcium channels

The latter, although do not play a significant role in the genesis of the action potential, have a role in letting calcium enter the cell every time the cell is depolarized. In other words, a neuron that fires many spikes opens the calcium channels, allowing calcium to enter the membrane. Calcium does not affect the membrane potential significantly (at least for what concerns the neuron), but *the internal concentration of calcium ions is a marker of the previous activity of the neuron*.

In the following the "voltage-dependent" channels will not be explicitly considered in the integrate and fire model for the following reasons: a) the sodium and potassium channels come into play only above the threshold. In the integrate and fire model, the behavior above threshold is described by a stereotyped form; b) the calcium current is negligible. The role of calcium is to act as an intermediary between the pre-synaptic action potentials and the opening of chemical channels (see below). To simplify the model, we will assume that a spike directly opens the chemical channels, neglecting the actual processes occurring in the membrane. This aspect will be better clarified in the point below.

ii) <u>channels dependent on a chemical substance</u>. The opening and closing of the gates is determined by the concentration of a substance at the membrane. In particular we will have:

- ✓ channels sensitive to **glutamate**.

These channels allow the passage both of sodium ions and of other chemical substances. The balance of the current is reached at a potential of about 0 mV. They are therefore excitatory channels for the neuron (since the equilibrium potential is moved above threshold). In the following they will therefore be indicated with the subscript *e*.

- ✓ channels sensitive to **GABA** (γ-aminobutyric acid)

These are predominantly chloride channels, and therefore have an equilibrium potential of approximately - 70 mV. Note that, although they have no effect on the resting neuron, since the potential of the resting neuron is very close to that of chloride, they perform an inhibitory function, because they tend to keep the potential far from the activation threshold of the action potential. In the following they will be indicated with the subscript *i*.

- ✓ **calcium**-sensitive channels.

These are mainly potassium channels, and therefore have a strongly negative equilibrium potential, around - 90 mV. They also perform the function of inhibiting the neuron; however, since they are not sensitive to a neurotransmitter coming from a pre-synaptic neuron, but to the calcium inside the neuron itself, they determine a phenomenon of **adaptation** of the neuron. We will indicate them in the following with the subscript *a*.

Based on what has been said about chemical-dependent channels, we can now describe the chain of events that occurs when a postsynaptic neuron receives excitation or inhibition from a pre-synaptic neuron. The diagram of the synaptic connection is represented in the following figure:

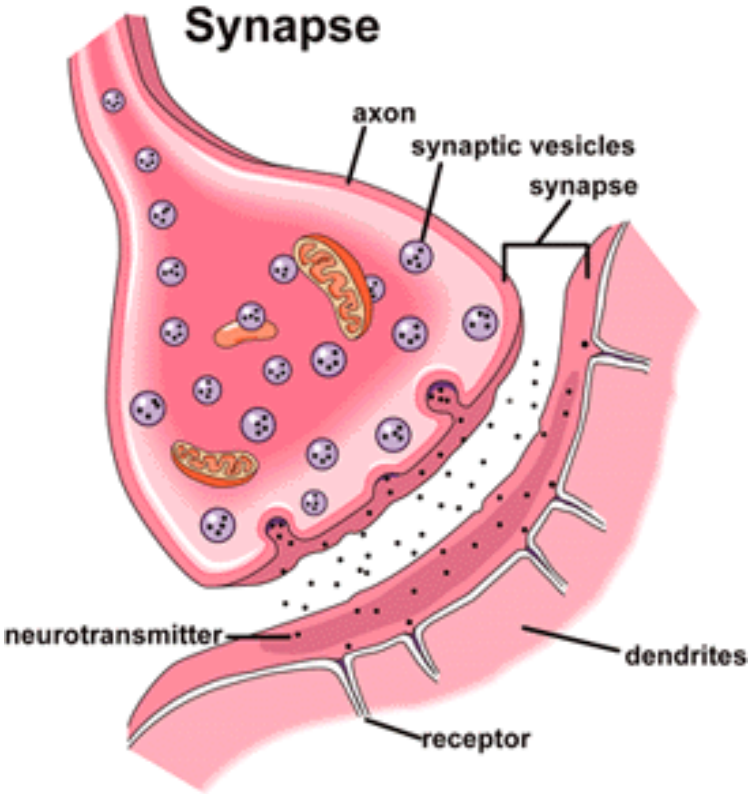

Representation of a chemical synapse

In the termination of an axon there are vesicles containing the neurotransmitter. Remember that each neuron uses only one type of neurotransmitter, therefore a certain neuron (in our case the pre-synaptic neuron, which sends its action potentials towards the postsynaptic neuron) can only be excitatory (if it uses glutamate) or only inhibitory (if it uses GABA). Upon arrival of the action potentials along the axon, calcium channels open (in the pre-synaptic axon) causing an increase in the concentration of Ca^{++}. This increase in concentration determines the migration of the vesicles towards the axon wall: the vesicle membrane fuses with the axon membrane, causing the neurotransmitter to escape into the space between the axon and the dendrite of the post-synaptic neuron. As a consequence of the presence of the neurotransmitter, the ion channels sensitive to it (glutamate channels, if the pre-synaptic axon uses glutamate, GABA channels in the other case) open, modifying the membrane potential of the post-synaptic neuron. The effect will be excitatory or inhibitory depending on the neurotransmitter. For the purposes of the integrate and fire model, we can say that the channels open when the presynaptic neuron fires. In fact, it is the pre-synaptic spike that determines the opening of the channels, through the mediation of calcium. Spikes in an excitatory presynaptic neuron will open the glutamatergic channels, *e*, and, spikes in an inhibitory presynaptic neuron will open the GABAergic channels, *i*.

Finally, suppose that, due to an excitation (which can come either from excitatory pre-synaptic neurons or directly from an injected current) our postsynaptic neuron starts firing a train of spikes. The presence of action potentials will determine the opening of calcium channels in the post-synaptic neuron, resulting in calcium entry into the cell. Remember, in fact, that calcium is a marker of the previous activity of the neuron. But the increased post-synaptic concentration of calcium will determine the opening of the potassium channels, which have an inhibitory effect on the neuron itself.

It is a self-adaptation phenomenon: the more the neuron fires, the more it opens its potassium channels and slows down its discharge rate.

In conclusion, by avoiding, for the sake of simplicity, to consider the calcium channels and the concentration of neurotransmitters directly in the model, but taking into account only the spikes of the neurons, we can simulate the previous phenomena, **on our post-synaptic neuron**, stating that:

i) every time an inhibitory pre-synaptic neuron fires a spike, we must open the inhibitory channels in the post-synaptic neuron;

ii) every time an excitatory pre-synaptic neuron fires a spike, we have to open excitatory channels in the post-synaptic neuron;

iii) every time our (postsynaptic) neuron fires, we must open its own channels of adaptation.

As can be seen, the three previous phenomena are formally similar, and change only for the equilibrium potential of the channels, and for which neuron, with its spike, is the cause of the opening. Hence, we can use a single mathematical formalism to describe the opening of a certain class of ion channels, caused by the spike of a neuron.

In the following we will initially consider only one type of channel, which we will indicate with the subscript s ($s = e$, i or a, depending on whether it is an excitatory channels based on glutamate, an inhibitory channels based on GABA, or the adaptation channels). As seen with regard to the Hodgkin and Huxley model, the effect of the channels can be described by a conductance, g_s, in series with the equilibrium potential, E_s. We therefore arrive at the following electrical analogue:

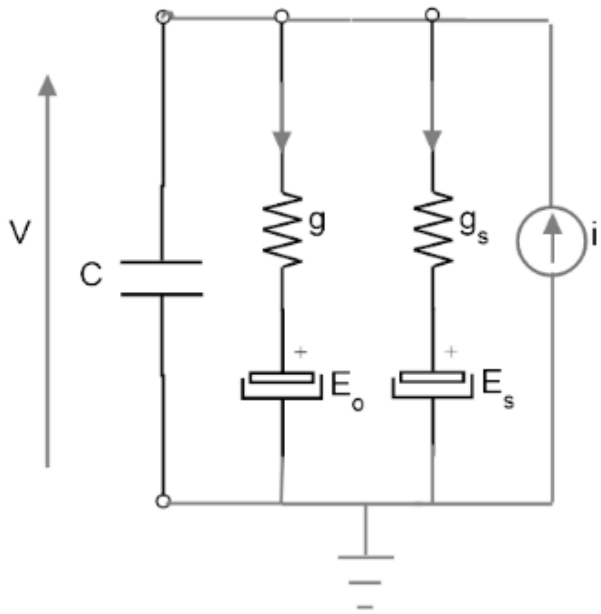

Integrate and fire model, with the addition of a single class of ionic channels, named "s" for generality (s = e, i or *a)*

The following differential equation corresponds to the previous electric analog:

$$C\frac{dV}{dt}+g(V-E_0)+g_s(V-E_S)=i \tag{15}$$

The previous equation can also be written in the following form, where the “synaptic current” is put in evidence

$$C\frac{dV}{dt}+g(V-E_0)=i+i_S \tag{16'}$$

with

$$i_s=g_s(E_S-V) \tag{16''}$$

As can be seen clearly from Eqs. (16), if $E_S>V$ the current is positive, and therefore charges the capacitance and contributes to depolarize the membrane. If vice versa $E_S<V$, then the current is negative, and induces a repolarization of the membrane, discharging the capacitance. In particular, the previous inequalities must be applied when V is at the threshold value, to understand if a given ion channel has, on the whole, an inhibitory or an excitatory effect. The ion channels with $E_S>V_t$ will be excitatory, because they "pull" the action potential beyond the threshold value, and vice versa.

2.5 Mathematical description for the opening and closing of ionic channels

At this point, we can describe, in a simplified way, the process of opening or closing of the channels. For simplicity, we will use a formalism similar to that used by Hodgkin-Huxley for the opening and closing of the gates, but we will assume that each channel has only one gate (that is, that the dynamics is simply an exponential). Assuming more complex dynamics (with more gates) has secondary effects and does not significantly affect the following results.

We will therefore indicate with $p_s(t)$ the probability that the channels of type "s" are open, at a certain instant. By the law of large numbers, this probability practically coincides with the fraction of channels open at the given instant. Therefore, indicating with g_{smax} the maximum conductance (i.e., the one that occurs when all the channels are open and, therefore, $p_s = 1$) we can write:

$$g_s=g_{s\max}\ p_s \tag{17}$$

We assume that the quantity p_s follows a first order dynamics

$$\frac{dp_s}{dt}=\alpha_s(1-p_s)\ -\beta_s p_s \tag{18}$$

in which we indicated with α_s and β_s the opening and closing rates of the channels. Remember that Eq. (18) is linear and time invariant (and therefore admits an exponential solution) only if α_s and β_s are assumed as constant.

However, unlike the voltage dependent sodium and potassium channels considered in the Hodgkin-Huxley model, the channels that we are considering now open following the presence of a spike, and close in the absence of a spike. In fact, both the neurotransmitter (which acts as a mediator

for glutamate or GABA-dependent channels) and calcium (which acts as a mediator for potassium channels) are progressively reabsorbed in the absence of spikes.

Hence, to describe the dependence of the kinetics of the channels on the spike, while maintaining the solution of the first order linear equation, we will make the following additional hypotheses:

i) during a spike (obviously, a spike capable of determining the opening of the "s" type channel) the opening rate goes to a much greater value than the closing rate, that is: $\alpha_s >> \beta_s$. We will also assume a constant rate over the period in question. Consequently, during the spike, we will have a rapid opening of the channels;

ii) at the end of the spike, in the intermediate period between one spike and the next, the opening rate α_s goes to zero (there is no more neurotransmitter leakage or calcium input) while the closing rate β_s remains at the constant value previously used. The channels are now closing, until the next spike arrives.

Equation (18) is therefore piecewise linear, in the sense that we use constant values for the parameters, even if different from each other, in the two periods considered. Remember that the solution of (18), with constant parameters, has the following form:

$$p_s(t) = \left(p_{s0} - p_{s\infty}\right)\exp\left(-\frac{t-t_0}{\tau_s}\right) + p_{s\infty} \tag{19}$$

with a meaning of symbols analogous to the one used in Eq. (6). In particular, we have

$$p_{s\infty}(t) = \frac{\alpha_s}{\alpha_s + \beta_s} \qquad \tau_s = \frac{1}{\alpha_s + \beta_s}$$

Let us now apply (19) separately to the two time periods, during a spike, and between one spike and the next.

i) We indicate with t_j the instant of time at which the j-th spike occurs, capable of determining the opening of the "s" channels. We also indicate with T_s the duration of the spike. As mentioned above, during the spike we have the opening of the channels, and the variable p_s, starting from a generic initial state determined by the past history, moves towards the asymptotic value. We therefore have

$$p_s(t) = \left(p_s(t_j) - \frac{\alpha_s}{\alpha_s + \beta_s}\right)\exp\left\{-(t-t_j)(\alpha_s + \beta_s)\right\} + \frac{\alpha_s}{\alpha_s + \beta_s} \quad \text{per} \quad t_j < t < t_j + T_s \tag{20'}$$

ii) Between a spike and the following one, the opening of the channels is zero, and the variable p_s returns to zero, with the following law:

$$p_s(t) = p_s(t_j + T_S)\exp\left\{-(t - t_j - T_S)\beta_s\right\} \quad \text{per} \quad t_j + T_s < t < t_{j+1} \tag{20''}$$

in which the initial state, $p_s(t_j + T_S)$, is obtained by computing Eq. (20') at the instant $t_j + T_s$.

Note that the time constant during step i) is much less than the time constant during step ii), since, as mentioned, $\alpha_s >> \beta_s$. This means that the variable p_s rises rapidly during the spike, and then descends much more slowly, until the next spike arrives.

The following figure shows an example of the trend of the variable p_s, assuming a spike frequency of 20 Hz, a spike duration of 1 ms, and $\alpha_s = 0.48\,\text{ms}^{-1}$, $\beta_s = 0.02\,\text{ms}^{-1}$ (therefore, time constants are 2 ms and 50 ms, respectively), starting from an initial state of zero (i.e. all channels all closed).

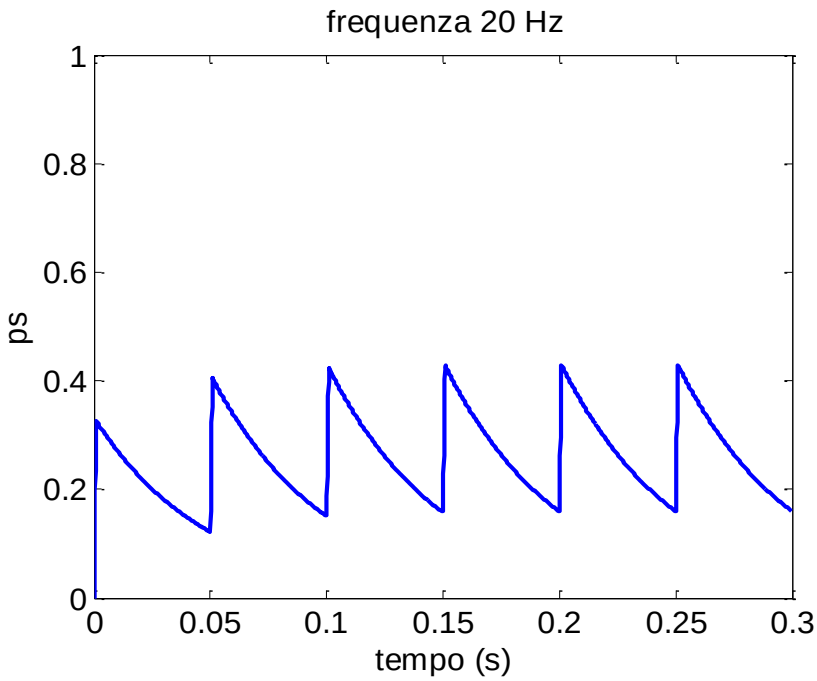

Temporal pattern of the quantity p_s, following a train of spikes with frequency 20 Hz. The duration of a spike is 1 ms, the time constants are 2 ms (up) and 50 ms (down)

The following figure shows the same quantity, evaluated for a spike frequency as large as 50 Hz. As can be seen, as the frequency of the spikes increases, the opening of the ion channels increases too, resulting, according to (17), in greater conductance.

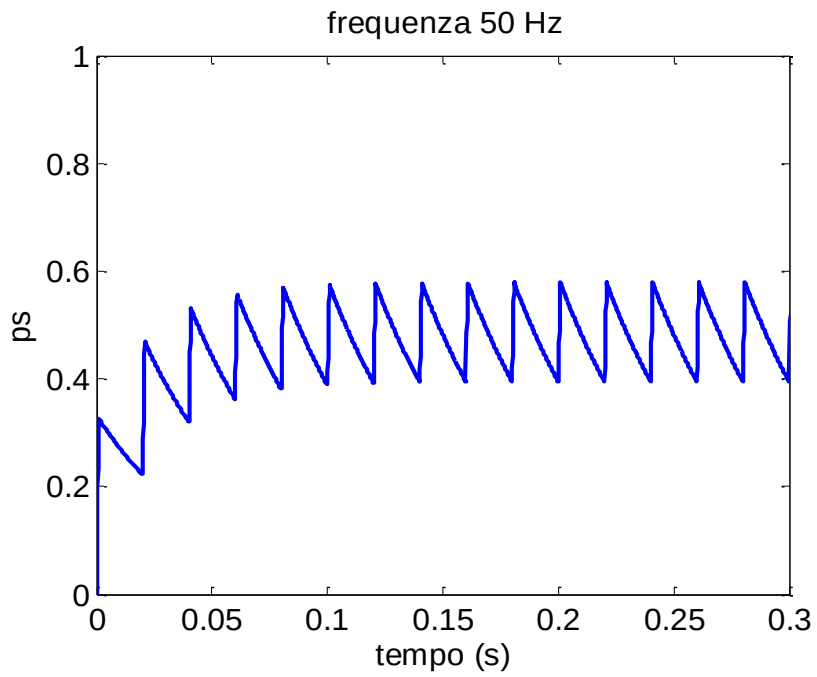

Temporal pattern of the quantity p_s, following a train of spikes with the frequency 50 Hz. The duration of a spike is 1 ms, the time constants are 2 ms (up) and 50 ms (down)

In the previous example we hypothesized only one type of ion channel, described with the subscript "s". Now suppose that a neuron (as it actually happens) includes both the channels sensitive to glutamate (subscript "e", excitatory), and the channels sensitive to GABA (subscript "i", inhibitors) as well as potassium channels sensitive to calcium (subscript "a", adaptation). The complete electrical analogue of our Integrate and Fire neuron will therefore be the following (note that I_m denotes the membrane current resulting from all the channels present in normal conditions):

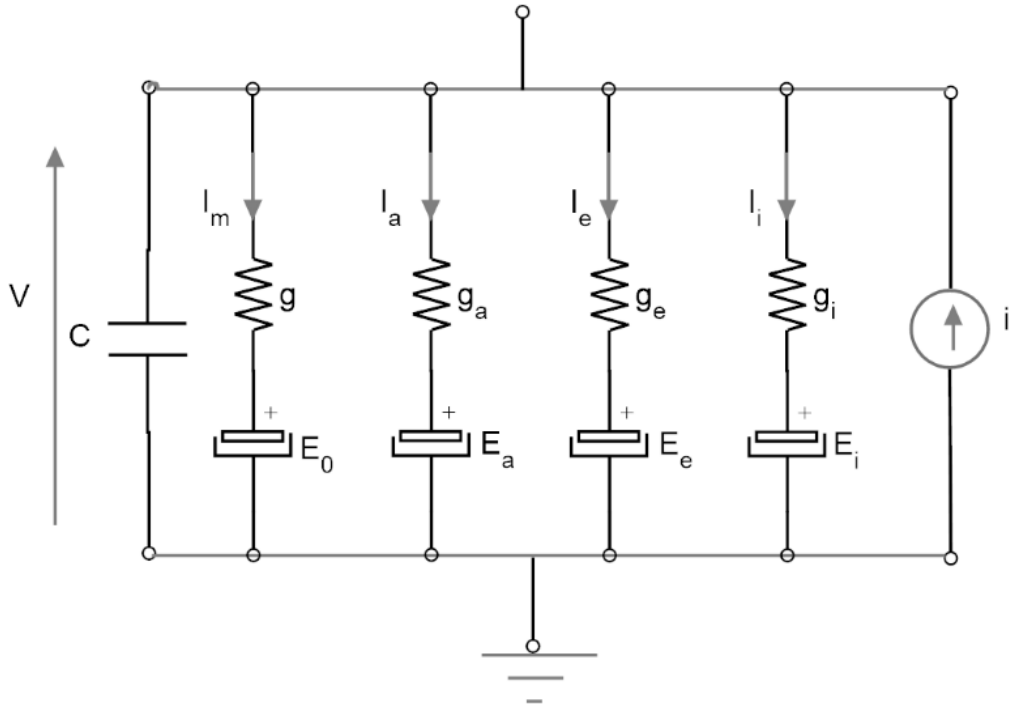

Integrate and Fire model in which three different kinds of channels are put in eviedence

The previous model corresponds to the following system of differential equations

$$C\frac{dV}{dt}+g(V-E_0)+g_{a\max}p_a(V-E_a)+g_{e\max}p_e(V-E_e)+g_{i\max}p_i(V-E_i)=i \tag{21}$$

$$\tau_t\frac{dV_t}{dt}=-V_t+V_{tL} \tag{22}$$

$$\frac{dp_a}{dt}=\alpha_a(1-p_a)-\beta_a\ p_a \tag{23}$$

$$\frac{dp_e}{dt}=\alpha_e(1-p_e)-\beta_e\ p_e \tag{24}$$

$$\frac{dp_i}{dt}=\alpha_i(1-p_i)-\beta_i\ p_i \tag{25}$$

where the parameters α and β, which are present in (23), (24) and (25), depend on the particular channel and the individual spikes, according to the previous analysis. In particular, α_e assumes a high

value every time an excitatory pre-synaptic neuron fires, α_i assumes a high value every time an inhibitory pre-synaptic neuron fires, and α_a is affected by a spike from the same neuron under examination (i.e. the post-synaptic neuron).

2.6 Numerical integration of the Integrate and Fire Model

The previous equations can be easily implemented in a numerical algorithm, with some simple tricks:

i) Differential equation of membrane potential.

Equation (21) can always be placed in the canonical form:

$$\tau \frac{dV}{dt} = -V + V_\infty \tag{26}$$

where, however, the quantities τ and V_∞ vary at each step (the model has no constant parameters, because the conductances vary and also the external current, *i*, is generally not constant). In particular, we have (with considerations similar to those used for Eqs. (2) - (4))

$$g_{tot} = g + g_a + g_e + g_i \tag{27}$$

$$E_{tot} = \frac{gE_o + g_e E_e + g_i E_i + g_a E_a}{g + g_e + g_i + g_a} \tag{28}$$

and therefore

$$\tau = \frac{C}{g_{tot}} \qquad V_\infty = E_{tot} + \frac{i}{g_{tot}} \tag{29}$$

By integrating (26) with Euler's method, and making use of (27), (28) and (29) at each step, we obtain, at the k-th step

$$V(k+1) = V(k) + \left(V_\infty(k) - V(k)\right)\frac{\Delta t}{\tau} \tag{30}$$

where $V(k)$ indicates the variable at the k-th step, and Δt is the integration step.

However, there is also a more accurate method, compared to (28), to calculate the variable *V* step by step. We can use the solution of the equation with constant parameters (hence the solution (6)), assuming however that the parameters and the current remain constant only within the integration step. Then we can consider the instant k-th as the initial instant, the instant k + 1-th as the current instant, the value $V(k)$, as the initial value of the variable, and the value $V(k+1)$ as the current value. The (6), remembering that between the two instants there is a time interval equal to the integration step Δt, becomes:

$$V(k+1) = \left(V(k) - V_\infty(k)\right)\exp\left(-\frac{\Delta t}{\tau}\right) + V_\infty(k) \tag{31}$$

Eq. (31) can be used instead of (30) within the numerical integration cycle.

Of course, both (31) and (30) should be used only when the membrane potential is below the threshold. As soon as the value of the variable $V(k+1)$ overcomes the threshold, V_t, the variable must return to the reset value.

Finally, it is easy to see that (31) simplifies into (30), if we approximate the exponential with its Taylor series around the origin. In fact, we have:

$$\exp\left(-\frac{\Delta t}{\tau}\right) \cong 1 - \frac{\Delta t}{\tau}$$

and, by replacing into (31):

$$V(k+1) = \left(V(k) - V_\infty(k)\right)\left(1 - \frac{\Delta t}{\tau}\right) + V_\infty(k) = V(k) - V(k)\frac{\Delta t}{\tau} - V_\infty(k) + V_\infty(k)\frac{\Delta t}{\tau} + V_\infty(k) =$$
$$= V(k) + \left(V_\infty(k) - V(k)\right)\frac{\Delta t}{\tau}$$

which is exactly equal to Eq. (30).

Differential equation for the refractory time

To simulate (22) one can use Euler's method or, still better, exploit the observation that this equation decays exponentially between one spike and the other (that is, Eq. (14) is valid). We can then calculate the value of the variable V_t at step k+1, known the value at step k, as follows (having indicated with t_k the instant of time at the k-th step and with $t_{k+1} = t_k + \Delta t$ the instant of time at the k + 1 step , and having used (14)):

$$V_t(k+1) - V_{tL} = \left(V_{tH} - V_{tL}\right)\exp\left(-\frac{t_k + \Delta t - t_j}{\tau_t}\right) = \left(V_{tH} - V_{tL}\right)\exp\left(-\frac{t_k - t_j}{\tau_t}\right)\exp\left(-\frac{\Delta t}{\tau_t}\right) =$$
$$= \left(V_t(k) - V_{tL}\right)\exp\left(-\frac{\Delta t}{\tau_t}\right) \qquad (32)$$

Equation (32) can be easily implemented at each step in the integration cycle. Again, (32) only holds between one spike and the next. At the moment of the spike, the quantity $V_t(k+1)$ must be moved instantly to the high value, V_{tH}.

iii) Differential equations for the ionic channels

To numerically implement the solution of Eqs. (23) - (25) one can use the Euler's method, or the solutions (20), which, however, consider the duration time of the spike. Let us then introduce a simplifying stratagem, introducing two simplifications which are very useful in practice:

a) note, from the previous figures, that the rise time for opening the channels is almost instantaneous, while the subsequent exponential decay occurs with a much slower time constant. We can then calculate the exact value of the climb using Eq. (20 '), but then apply this "jump" instantly at the instant of the spike.

b) since, during the spike, it is $\alpha_s >> \beta_s$, we can neglect β_s during the computation of the rise period.

Using the simplifications a) and b), and remembering that the end of the climb is obtained from (20') assuming $t = t_j + T_s$, we have:

$$p_s(t_j + T_S) = \left(p_s(t_j) - 1\right)\exp\{-T_S\alpha_s\} + 1 \tag{33}$$

The previous equation makes use of the parameter $T_S\alpha_s$, which has little biological significance. We then introduce a more significant parameter, Δp_s , which represents the number of channels that open as soon as a spike arrives, starting from a situation in which all channels are closed (in other words, it is the fraction of closed channels that open following a spike). Equation (33) becomes:

$$\Delta p_s = 1 - \exp\{-T_S\alpha_s\}$$

from which

$$\exp\{-T_S\alpha_s\} = 1 - \Delta p_s \tag{34}$$

By replacing (34) into (33), we have:

$$p_s(t_j + T_S) = \left(p_s(t_j) - 1\right)\left(1 - \Delta p_s\right) + 1 = p_s(t_j) - p_s(t_j)\Delta p_s + \Delta p_s = p_s(t_j) + \Delta p_s\left(1 - p_s(t_j)\right) \tag{35}$$

Eq. (35) has an immediate interpretation: at each spike the amount of channels that opens is equal to the parameter Δp_s multiplied by the fraction of closed channels $\left(1 - p_s(t_j)\right)$.

We apply the "jump" provided by (35) instantly at the moment in which an appropriate spike opens the channels. Then:

i) Between one spike and the other, the state variable $p_s(t)$ decays exponentially. Indicating with τ_s the time constant during the descent phase (the ascent phase is now assumed instantaneous) that is, $\tau_s = \dfrac{1}{\beta_s}$, we can write, with reasoning analogous to those used to derive (32)

$$p_s(k+1) = p_s(k)\exp\left(-\frac{\Delta t}{\tau_s}\right) \tag{36}$$

ii) upon arrival of the spike, the quantity p_s instantly jumps to the value provided by (35). We can write (remembering that the spike instant t_j now occurs at step k+1, when we assume that the membrane potential of the *spiking neuron which causes the opening of the channel* exceeds the threshold):

$$p_s(k+1) = p_s(k+1) + \Delta p_s\left(1 - p_s(k+1)\right) \tag{37}$$

In conclusion,

I) between one spike and the following one must apply the equations (31), (32) e (36);

II) at the moment when the membrane potential of our neuron exceeds the threshold, the following changes instantaneously occur

If $V(k+1) > V_t(k+1) \rightarrow$	$V(k+1) = V_r$	reset
	$V_t(k+1) = V_{tH}(k)$	high threshold
	$p_a(k+1) = p_a(k+1) + \Delta p_a\left(1 - p_a(k+1)\right)$	adaptation

III) when an excitatory presynaptic neuron fires, we need to update the excitatory channels of our postsynaptic neuron. Suppose this happens at the instant $\tilde{k}+1$. Then

$$p_e(\tilde{k}+1) = p_e(\tilde{k}+1) + \Delta p_e\left(1 - p_e(\tilde{k}+1)\right)$$

IV) at the moment when an inhibitory presynaptic neuron fires, we need to update the inhibitory channels of our postsynaptic neuron. Suppose this happens at the instant $\tilde{k}+1$. Then

$$p_i(\hat{k}+1) = p_i(\hat{k}+1) + \Delta p_i\left(1 - p_i(\hat{k}+1)\right)$$

Finally, we note that not all neurons have the same synaptic strength (indeed, we will see in following chapters that, by modifying the strength of the synapses, neural networks are able to learn from experience). Therefore, the values of the parameters Δp_e and Δp_i, which describe the strength of the synapses (respectively excitatory and inhibitory) must be considered different for any particular synapse (therefore, one should consider parameters with two subscripts, one for the post-synaptic neuron of arrival and one for the starting pre-synaptic neuron). The problem of synaptic strength, and its learning based on experience, will be the subject of a subsequent chapter.