Assignment-1

Electrical & Electronics Systems| EE 1002

Q.1 Draw the schematic diagram of a thermal power plant and discuss its operation.

Q.2 Give the comparison of steam power plant, hydro-electric power plant, and nuclear power plant on the basis of operating cost, initial cost, efficiency, maintenance cost and availability of source of power.

Q.3 Draw the schematic diagram of a nuclear power station and discuss its operation.

Q.4 Use Nodal analysis to determine i_1, i_2, and i_3 as shown in Fig

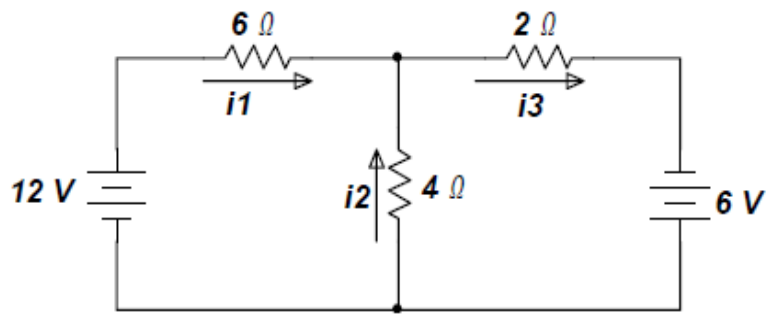

Q.5 Determine the Mesh currents i_1, i_2, and i_3 using mesh analysis method as shown in Fig.

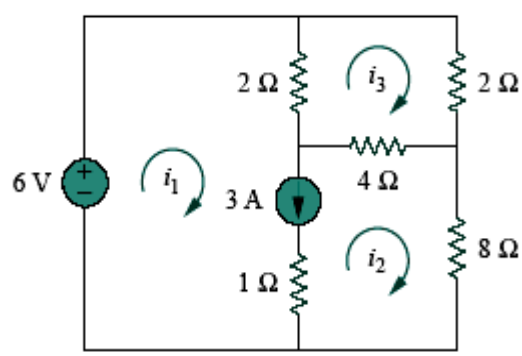

Q.6. Determine branch currents i_1, i_2, and i_3 in the given circuit using Mesh analysis method.

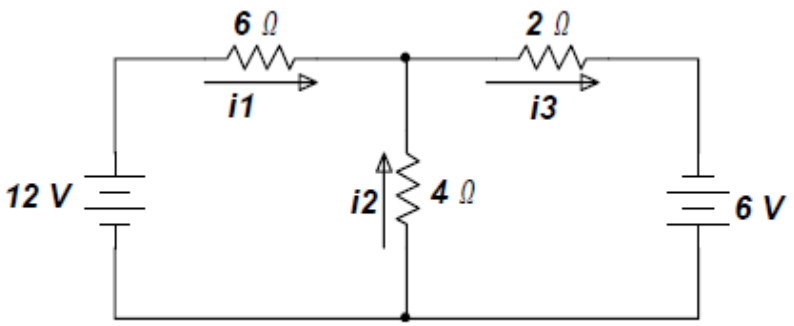

Q.7 Use Mesh analysis method to determine I_1 , I_2 and current through the galvanometer for the circuit shown in Figure.

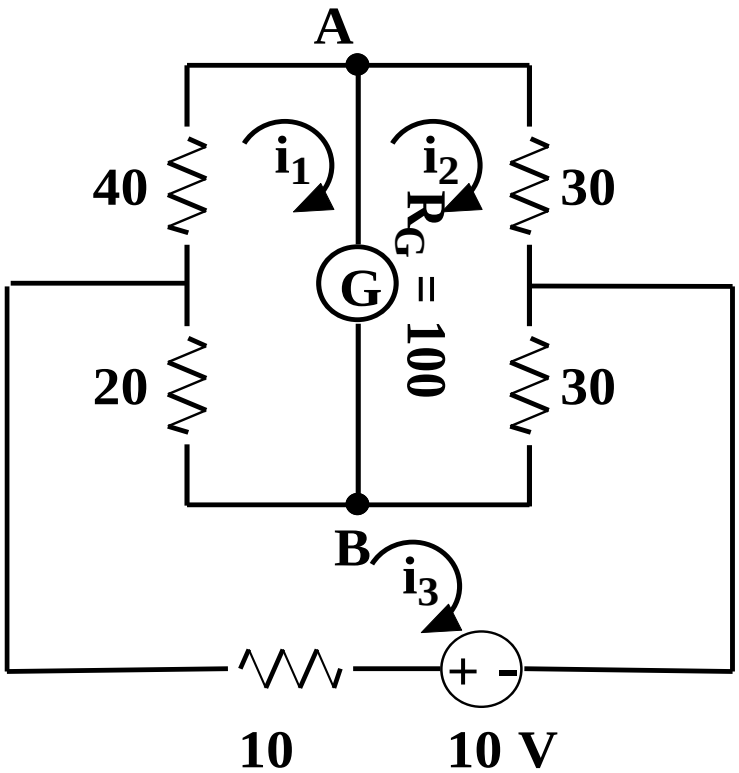

Q.8 Find the node voltage at Node V_A using node-voltage analysis method.

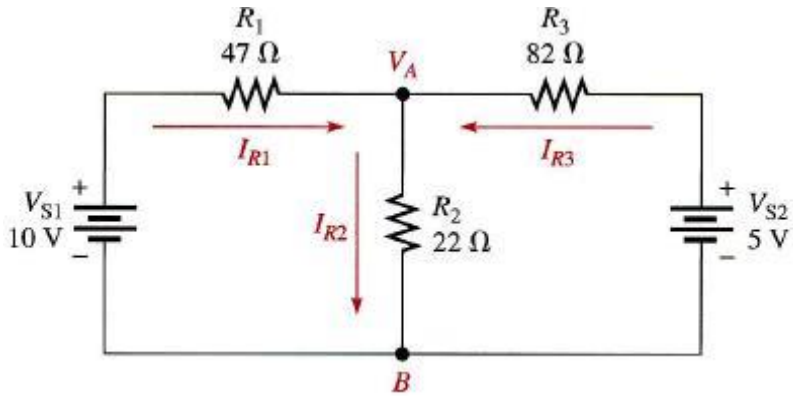

Q. 9 Find the node voltages at Node A (V_A) and Node B (V_B) using node-voltage analysis method.

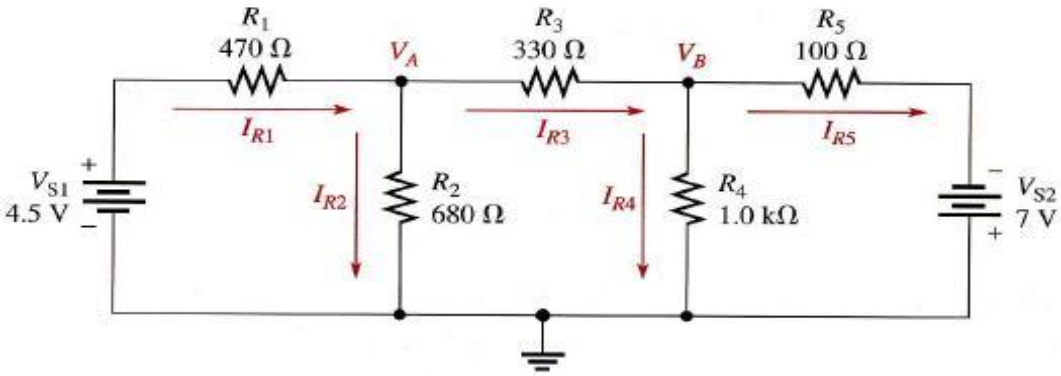

Q.10
Determine the current *I* using Nodal Analysis method.

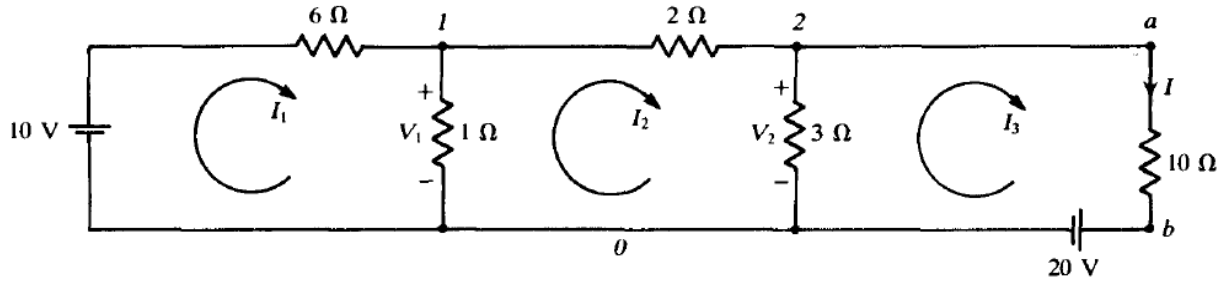

Q.11 Explain using illustrations "How electrical energy is produced through wind".

Q.12 Write the working principle of Solar Cell.

Q.13 Thevenin's equivalent voltage across the terminals A & B of the circuit shown in Fig.

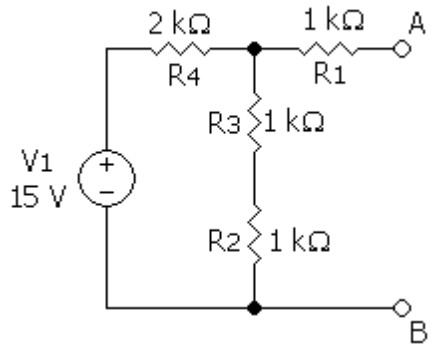

Q.13 The value of load resistance RL in the circuit shown in Fig. for maximum power transfer

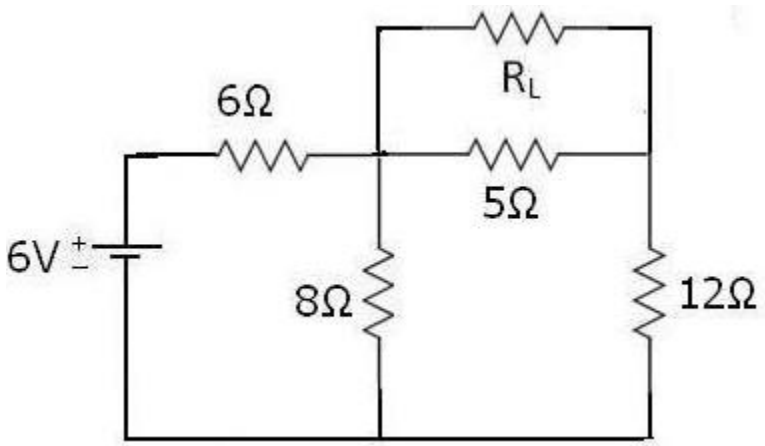

Q.14 Using source transformation technique the equivalent voltage across terminals P & Q of Fig

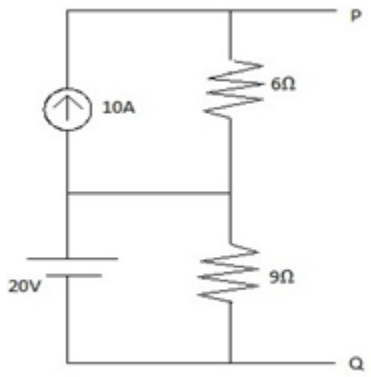

Q.15 A voltage of 120 V at 50 Hz is applied to a resistance, R in series with a capacitance, C . The current drawn is 2 A, and the power loss in the resistance is 100 W. Calculate the resistance and the capacitance.

Q.16 Calculate the current and power factor in the following cases for the circuits having impedances as given, fed from an ac supply of 200 V. Also draw the phasor diagram in all cases.
(i) Z = (15+j20) Ω

(ii) $Z = (14\text{-}j14)\ \Omega$
(iii) $Z = R + j\,(X_L - X_C)$, where $R = 10\ \Omega$, $X_L = 20\ \Omega$, and $X_C = 10\ \Omega$.

Q.17 A circuit consists of a coil of resistance 100 ohm and inductance 1H in series with a capacitor of capacitance 1 microfarad. Calculate (a) the resonant frequency, (b) current at resonant frequency, and (c) voltage across each element when the supply voltage is 50 V.

Q.18 A series R-L-C circuit supplied by 220 V single –phase voltage source has the following parameter values: R=10 ohm, L=0.3183 mH(millihenry), and C = 0.0795 nF (nanofarad). Calculate the resonant frequency, quality factor, bandwidth, and current in the circuit at resonance.

Q.19
A coil,(having resistance of 8 Ω and inductance of 60 mH) is connected in series with a capacitance of 100 micro farad across 220 V, 50 Hz supply. Compute (a) the current, (b) the power factor; and (c) the voltages drops in the coil and capacitance respectively.

Q.20
A coil of resistance 10 ohm and inductance 10 mH is connected in parallel with a 25 microfarad capacitor. Calculate the frequency at resonance.