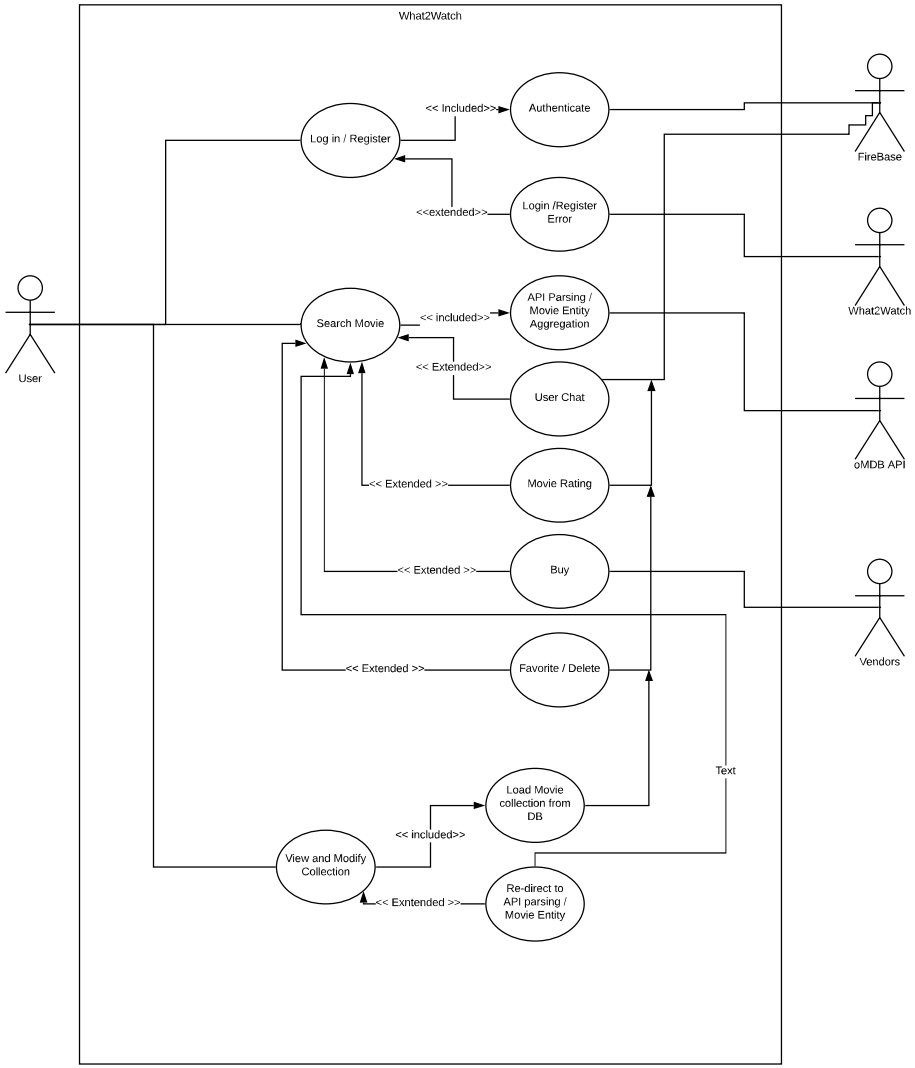

-The user/visitor has a movie in mind, using the movie search they are re-directed to a page showing the user/visitor that specific movie entity. The are also exposed to store link(s). If they are a **user** then they can add that movie entity into their **collection**or have a **user discussion**.
-The user/visitor wants to sign up for What2Watch. They must go to the sign-up page and type in their personal information such as their email and password. They should also be given the option to sign-in if they are already a user.
-The user wants to view his collection, under the user home page they can view their movie collection. All the movies are ordered by the user list and each movie entry can take them to that specific movie entity.