Unit-2 Motherboard & SMPS

Prepared By: N K Shukla

Motherboard

- A computer motherboard is nothing but the circuit board or the circuit which controls the entire functioning of the computer.
- All the components that form your computer are connected to the computer motherboard.
- The computer processor, which is the most important component of your computer, is mounted on the computer motherboard.
- All other components like the computer keyboard, computer monitor, computer mouse, hard drives. etc., are all connected to the computer motherboard through cables.
- Lets see block diagram of motherboard.

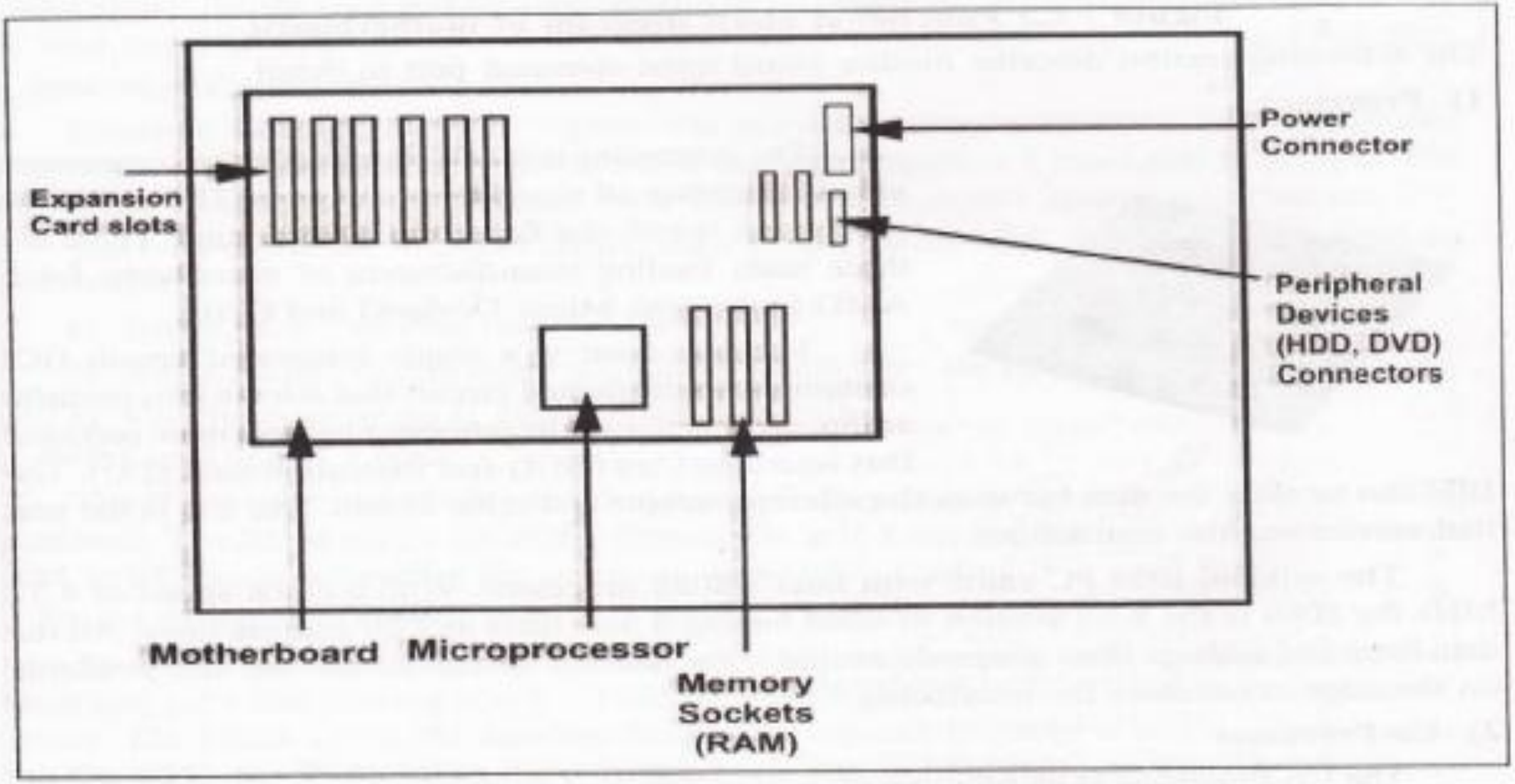

Layout of Motherboard

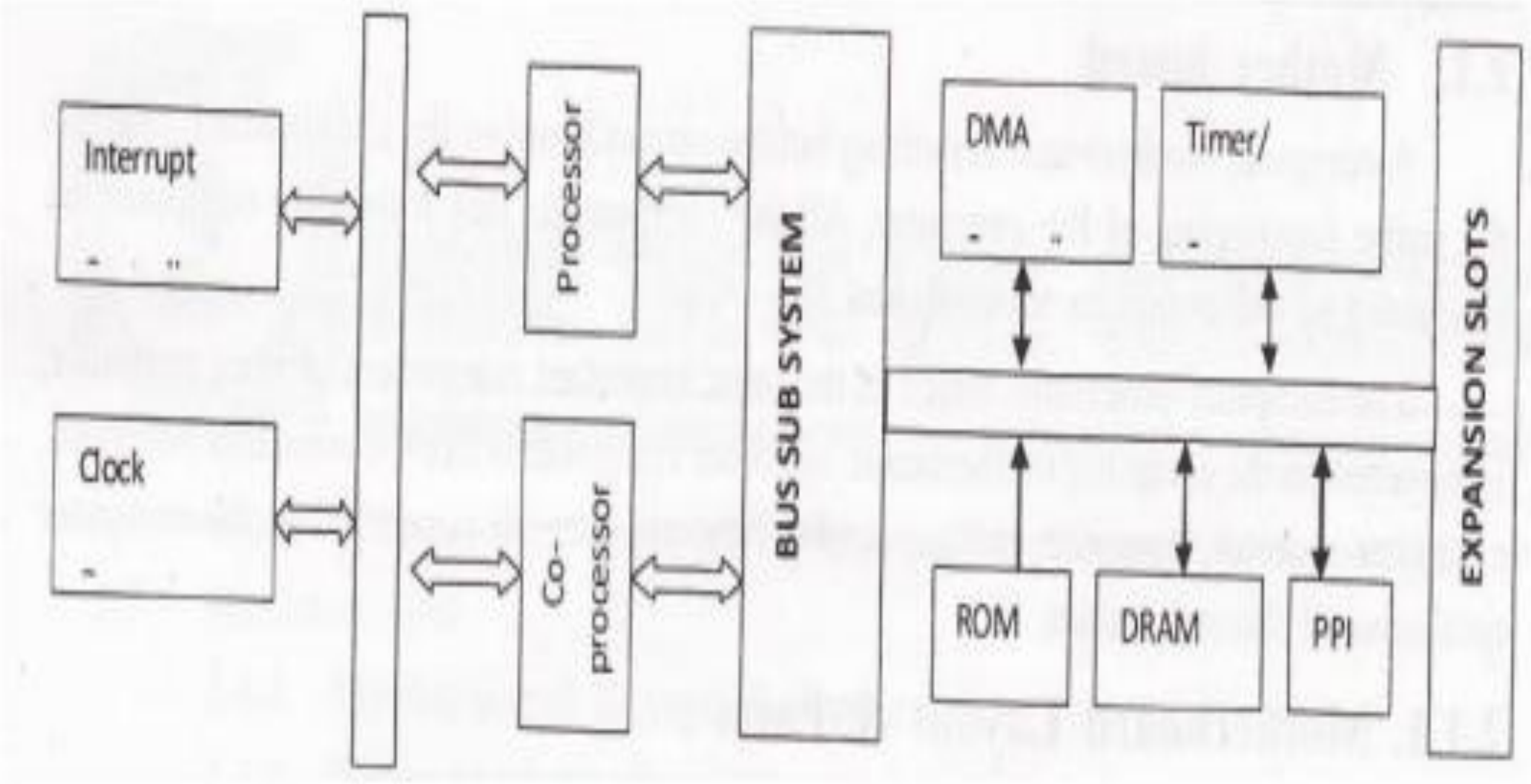

Block diagram of Motherboard

Motherboard Components

❖1. Processor

- The processing unit of a computer is the component, which processes all those zeros and ones.
- The higher the processing speed, the faster the system runs.
- There are three main leading manufacturers of processors: Intel, AMD (American Micro Devices) and Cyrix.
- The processor is a single integrated circuit (IC) containing sophisticated circuit that allows it to perform arithmetic functions.
- The processor has two main sections: Bus Interface Unit (BIU) and Execution Unit (EU).
- The BIU can transfer the data between the microprocessor and other circuit.
- The EU is the part that carries out the instructions.

❖2.Co-processor

- The Co-Processor is an optional plug-in component on the motherboard.
- The primary advantage of using this chip is the increased execution speed of program.
- The coprocessor permits a computer to carry out certain operations much faster.
- A coprocessor can make a computer run 5 to l0 times faster in some operation.
- The processor works in conjunction with the co-processor when it is operating in the maximum mode.
- Operations performed by the co-processor may be floating point arithmetic, graphics, signal processing, string processing, encryption or I/O Interfacing with peripheral devices.

❖3.Clock generator

- Computers are used clocked logic.
- All the logic elements in the computer are designed to operate synchronously.
- They carry out their designed operations one step at a time and each circuit makes one step at the same time.
- This synchronous operation helps the machine to keep track of every bit that it can process.
- These timing controls are generated by clock generator's logic.

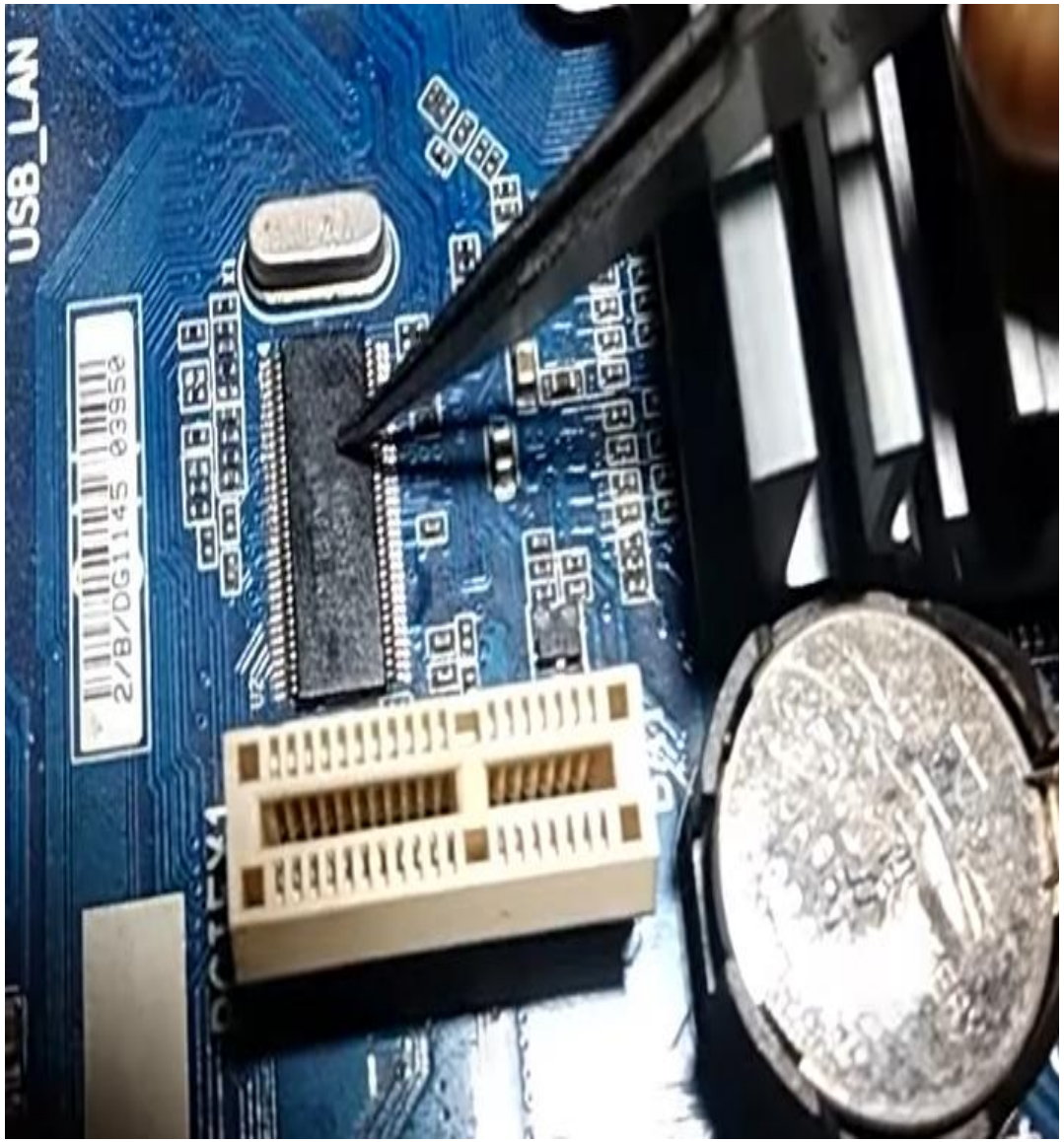

❖4. Bus Sub System

- This has latches to latch the address generated by the CPU on to the address buffer, transceivers to transfer data between processor and data bus, and bus controller to generate control signals.
- The bus controller generates signal to control address latch, memory read, memory write, I/O read and I/O write.

❖5.Interrupt Controller

- Interrupts are generated to capture the microprocessor's attention and temporarily divert it to a different process.
- The interrupt controller handles 8 maskable interrupts.
- The interrupt request lines are designated with numbers 2 to 7 with decreasing priority.
- The Non-maskable interrupt (NMI) logic generates the NMI signal. It is generated on detection of

  l) RAM parity error in motherboard

  2) RAM parity error in daughter boards which have the RAM as expansion memory

  3) Co-Processor error if coprocessor is installed

❖6. ROM and RAM Logic

- The PC memory is a block where any byte of information is directly available by calling its address.
- The ROM stores the POST (Power On Self Test) and BIOS.
- The use of dynamic RAM in PC needs refreshing the memory.
- The DMA channel 0 is used for it.

❖7. Direct Memory Access Controller (DMA Controller-8237)

- To speed up the system performance the main processor is to be relieved from time consuming jobs like moving blocks of memory (bulk data) between main memory and I/O devices.
- The DMA controller handles these tasks separately.
- Once it receives instructions from the CPU the DMA takes the command and does all the memory transfer operations.

❖8.Timer/counter Logic (Programmable Interval timer 8253)

- There are main three timers on motherboard.

1) Time 0 : Used to interrupt the processor at the rate of 18.2 clock cycle per second to maintain the system time and date

2) Time 1: Used to generate DMA request signals for performing refresh cycles at every 15 microseconds.

3) Time 2: Used to generate various tones by the speaker.

❖9. Peripheral Interface Logic (PPI-8255A)

- The programmable peripheral interface (PPI) device connects the peripheral devices to the personal computer system.
- It is design to implement parallel I/o ports without the additional circuit.
- The PPI is very flexible parallel interface that is software controlled.
- Earlier PC's had the keyboard connected to PPI.
- Recent models have a separate microcontroller such as 8042 for connecting mouse and keyboard with computer system.

Different types of Mother board.

❖1. Non-Integrated Motherboards

- Non-integrated Motherboards have assemblies such as the I/O port connectors (serial and parallel ports), hard drive connectors, floppy controllers and connectors, joystick connections etc. installed as expansion boards.
- This takes up one or more of the motherboard's expansion slots and reduces the amount of free space inside the computer case.
- Most of the older motherboards were Non-Integrated.
- Some of the later system boards began to integrate some of these assemblies right onto the circuit board.

Different types of Mother board.

❖1. Non-Integrated Motherboards

- Also known as a **Discrete Motherboard**, this is the standard board found in most desktop towers and custom-built PCs. It is a "base" that you populate with other parts.
- **How it works:** It has empty slots and sockets. You must buy the CPU, graphics card (GPU), and RAM separately and plug them in.
- **Key Advantage: Upgradeability.** If your graphics card gets old, you can pull it out and buy a new one without replacing the whole computer.
- **Best For:** Gamers, video editors, and anyone who wants a powerful computer they can improve over time.

❖2. Integrated Motherboards

- Integrated Motherboards have assemblies that are otherwise installed as expansion boards, integrated or built right onto the board.
- The serial and parallel ports, the IDE and floppy drive, and joystick all connect directly to the motherboard.
- This is now standard on any latest model 486 and above.
- It tends to free up some space inside the case and allows for better accessibility and airflow.
- The systems are cheaper to produce because there's less material involved, less installation and testing can all be done at the same time.
- They are more expensive to repair because if the problem is with a controller failure or broken pin it means a new motherboard should be needed.
- Also known as an **Onboard** or **SoC (System on Chip)** motherboard, this type prioritizes space and cost savings over flexibility.
- **How it works:** Key components (processor, graphics, sometimes even memory) are permanently soldered onto the circuit board during manufacturing. You cannot easily remove them.
- **Key Advantage: Portability & Cost.** Because everything is on one board, it fits into thin laptops and tablets. It is also cheaper to manufacture mass-produced devices this way.
- **Best For:** Laptops, tablets, smartphones, and low-cost office computers where space is tight

❖3. Embedded Motherboard

- In an effort to reduce the cost (and size) of a computer system even more, manufacturers began integrating (or embedding) technologies such as video, sound, networking and modems right onto the system board.
- This dramatically increases the cost of the main board but reduces the cost of the overall system.
- This is a highly specialized board designed to live inside a non-computer device. You rarely see these unless you are an engineer or technician.
- **How it works:** It acts as the "brain" for a machine that isn't a standard PC. It is designed to run 24/7, resist dust/heat, and consume very little power. It usually runs a specialized OS (like a stripped-down Linux or Windows IoT).
- **Key Advantage: Durability & Reliability.** They are built to never be turned off and to last for 10+ years without maintenance.
- **Best For:** Digital signage (screens at airports), ATMs, medical equipment (MRI machines), and smart fridges.

Feature	**Non-Integrated**	**Integrated**	**Embedded**
Primary Design	**Modular**: You plug parts in.	**All-in-One**: Parts are built-in.	**Task-Specific**: Built for one job.
Components	CPU, GPU, and RAM are removable.	CPU/GPU are often soldered to the board.	CPU/RAM are soldered; rarely changed.
Upgradeability	**High**: Can swap out almost everything.	**Low**: Hard or impossible to upgrade.	**None**: Designed to be fixed forever.
Physical Size	Large (ATX, Micro-ATX).	Small (Laptop boards, Mini-ITX).	Very Small (Nano-ITX, custom shapes).
Best Use Case	Gaming PCs, Workstations, Custom Desktops.	Laptops, Budget Office PCs, Tablets.	ATMs, Kiosks, Smart Appliances, Cars.

Motherboard Types/Form Factors (AT, Baby AT, ATX, LPX, NLX, BTX)

- The motherboard is a main printed circuit board used to connect all of the parts of a computer together.
- The CPU, memory, hard drives, optical drives, video card, sound card and other ports and expansion cards all connect to the motherboard directly or via cables.

Legacy Form Factors (1980s – 1990s)

- **AT (Advanced Technology)**
  - **Introduction**: Released by IBM in 1984.
  - **Dimensions**: Measures approximately 12" wide by 13.8" deep.
  - **Key Features**: Used two 6-pin power connectors that were not keyed, meaning they could be swapped and potentially damage the board if installed incorrectly.
  - **Limitations**: Its large size often caused it to overlap with drive bays, and the CPU was placed in front of expansion slots, blocking long cards.
- **Baby AT**
  - **Introduction**: A smaller version of the AT board introduced by IBM in 1985.
  - **Dimensions**: Approximately 8.5" wide by 10–13" deep.
  - **Key Features**: It became the most popular design for over a decade due to its compatibility with smaller cases. Like the full AT, it used a 5-pin DIN connector for the keyboard.
  - **Limitations**: It still suffered from CPU placement issues that hindered long expansion cards and required messy internal cabling for I/O ports.
- **LPX (Low Profile eXtension)**
  - **Introduction**: Developed by Western Digital in 1987 for "slimline" desktop cases.
  - **Key Features**: Used a **riser card** in the center of the board to hold expansion slots, allowing cards to sit parallel to the motherboard to save vertical space.
  - **Limitations**: It was semi-proprietary, making it difficult to find standardized replacement parts, and its compact design led to poor cooling for newer processors.

Modern & Standard Form Factors

- **ATX (Advanced Technology Extended)**
  - **Introduction**: Released by Intel in 1995 as the successor to AT and Baby AT.
  - **Dimensions**: Standard size is 12" x 9.6" (305mm x 244mm).
  - **Major Improvements**:
    - **Integrated I/O**: Ports (USB, PS/2, etc.) are soldered directly to the board, eliminating internal cables.
    - **Better Layout**: The CPU and RAM were moved away from expansion slots to allow for full-length cards and better airflow.
    - **Single Power Connector**: Replaced the two 6-pin AT connectors with one 20-pin (later 24-pin) keyed connector that cannot be plugged in backwards.
- **NLX (New Low Profile Extended)**
  - **Introduction**: Developed in 1997 by Intel, IBM, and DEC to replace the LPX standard.
  - **Key Features**: Like LPX, it uses a riser card but is a true industry standard. It supports modern technologies like AGP video and USB while allowing the motherboard to slide in and out of the case on rails for easy servicing.
- **BTX (Balanced Technology Extended)**
  - **Introduction**: Announced by Intel in 2004 to solve the heat and noise issues of high-performance ATX systems.
  - **Key Features**: Flipped the layout of the motherboard to place the CPU and chipset in a direct path of airflow from front intake fans.
  - **Fate**: Despite its cooling benefits, it had very little acceptance from manufacturers and was largely discontinued by 2006.

Form Factor	Dimensions	Primary Use	Status
AT (Full-AT)	12" x 13.8"	Early IBM PCs (386 and earlier)	Obsolete
Baby AT	8.5" x 13"	286, 386, 486, Pentium PCs	Obsolete
LPX	9" x 13"	Slimline/Low-profile desktops	Obsolete
ATX	12" x 9.6"	Standard desktop computers	Current Standard
Micro-ATX	9.6" x 9.6"	Budget & compact home/office PCs	Current
NLX	8-9" x 10-13.6"	Low-profile corporate desktops	Legacy
BTX	12.8" x 10.5"	High-heat/low-noise systems	Discontinued

Form Factors	Originated	Max Size	Typical Use
AT (Advanced Technology)	IBM 1984	12 x 11-13 Inch	Also known as Full At, it was popular during the era of the intel 80386 microprocessor superseded by ATX.
BABY AT	IBM 1985	8.5 x 10-13 Inch	IBM's 1985 successor to the AT motherboard. Functionally equivalent to the AT., it became popular due to its significantly smaller size.
ATX (Advanced Technology Extended)	Intel 1996	12 x 9.6 Inch	Created by intel in 1995. As of 2007, it is the most popular form factor for commodity motherboards. Typical size is 9.6 x 12 Inch although some companies extend that to 10 x 12 Inch.
LPX (Low Profile Extended)	Western Digital 1980	9 x 11-13 Inch	Based on a design by Western Digital, it allowed smaller cases than the AT standard, by putting the expansion card slots on a Riser Card. Used in retail PCs. LPX was never standardized and generally only used by large OEMs (Original equipment manufacturer).
NLX (New Low Profile Extended)	Intel 1999	8-9 x 10-13.6 Inch	A low-profile design released in 1997. It also incorporated a riser for expansion cards, and never became popular.

BTX (Balanced Technology Extended)	Intel 2004	12.8 x 10.5 Inch	A standard proposed by intel as a successor to ATX in the early 2000s, according to intel the layout has better cooling. BTX Boards are flipped in comparison to ATX Boards, so a BTX or MicroBTX Board needs a BTX case, while an ATX style board fits in an ATX case. The RAM slots and the PCI slots are parallel to each other. Processor is placed closest to the fan.
Nano-ITX	VIA 2003	4.7 x 4.7 inch	Targeted at smart digital entertainment devices such as PVRs, set-top boxes, media centers and car PCs and thin devices.
DTX	AMD 2007	8 x 9.6 Inch	It was designed for smaller computers like home theater PCs. The board allowed for 2 expansion slots. DTX motherboards are backward compatible with the ATX form factor, fitting in computer cases designed for ATX motherboards.

Chipsets

- The specialized chips on a computer's motherboard or expansion card are called chipset.
- The chip sets are a bunch of intelligent controller chips.
- It controls communications between the processor and external devices. Generally chipset contain more than one chip into single chip.
- The chipset manufacturers are generally independent from the manufacturer of the motherboard.
- Current manufacturers of chipsets for PC-compatible motherboard include NVIDIA, AMD, VIA Technologies, Sis, Intel, Broadcom etc.
- Some server manufacturers also develop custom chipsets for their products.
- In home computers game consoles and arcade game hardware chipset was used for the custom audio and graphics chips.
- Most of the manufacturer are include in their chipsets are floppy disk control circuitry, a connector for an embedded controller (IDE) hard disk, input/output ports like parallel port, serial port, USB ports etc, keyboard, mouse and games ports.
- Some chipset manufacturers are provide video (VGA) circuitry into their products as well.

- **Intel i7 chipset Advantages:**
- Affordable prices for being a quad-core
- 45nm node technology allows for efficient cooling and over clocking.
- IMC or integrated memory controller lets the chip connect directly to memory
- Four cores allows for handling software that requires lots of computations.

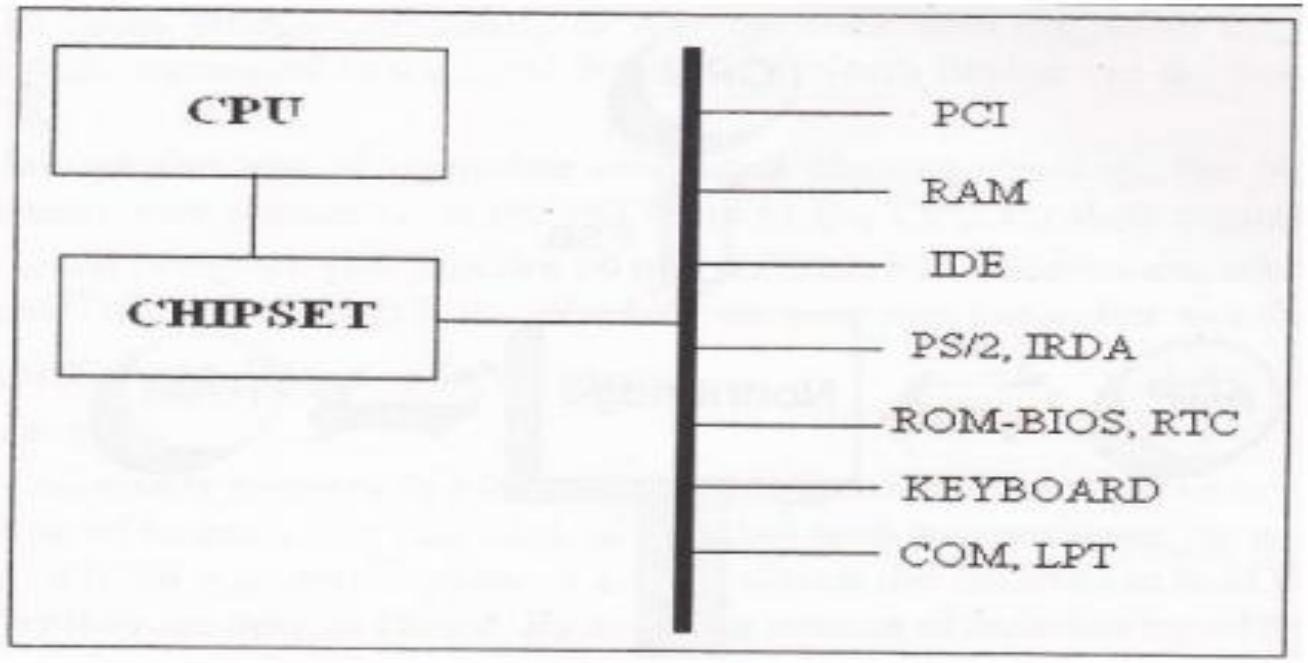

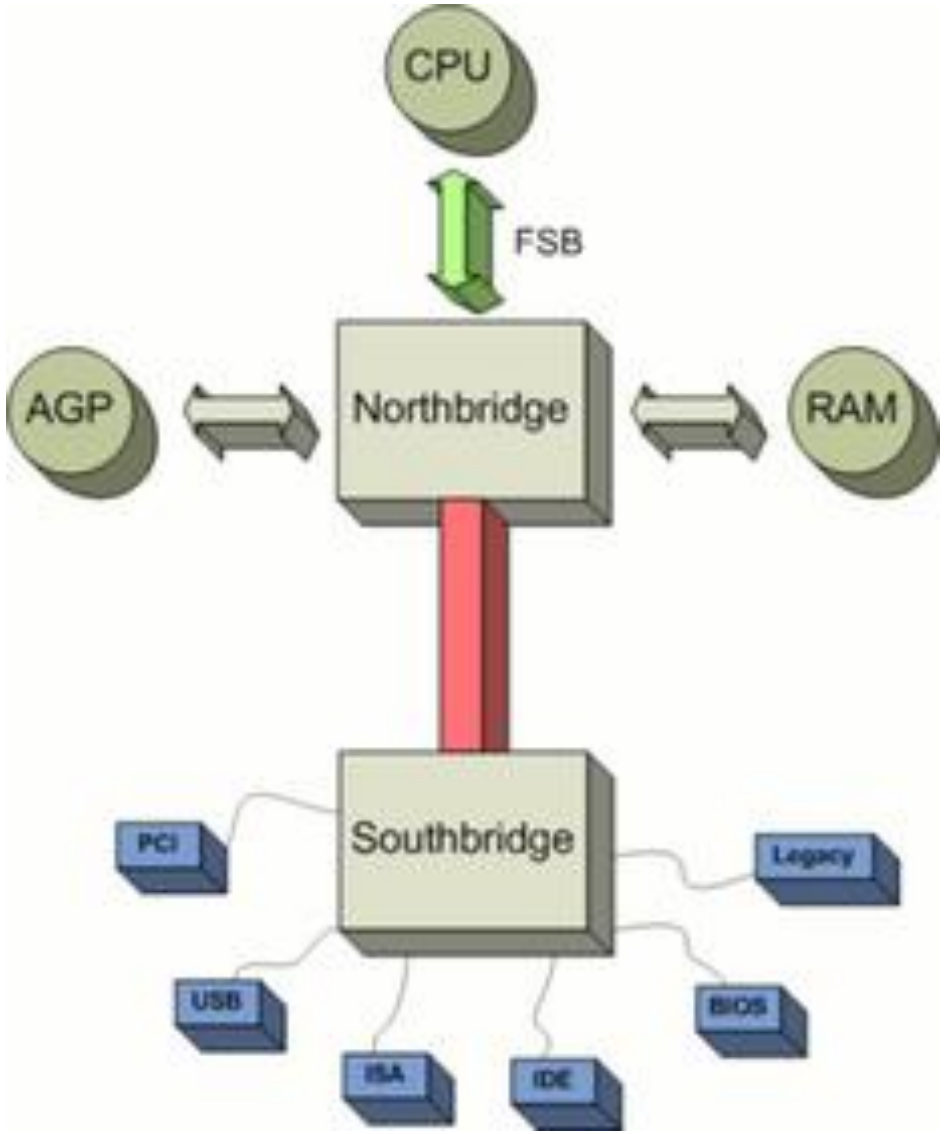

https://www.youtube.com/watch?v=i-QFtrIxCG0

North Bridge & South Bridge

- **North Bridge:**
- A Northbridge or host bridge is a microchip on some PC motherboards and is connected directly to the CPU (unlike the Southbridge) and thus responsible for tasks that require the highest performance.
- The Northbridge is usually paired with a Southbridge, also known as I/O controller hub.
- In systems where they are included, these two chips manage communications between the CPU and other parts of the motherboard, and constitute the core logic chipset of the PC motherboard.
- The Northbridge typically handles communications among the CPU. in some cases RAM, and AGP video cards, and the Southbridge.
- Some Northbridge also contain integrated video controllers, also known as Graphics and Memory
- Controller Hub (GMCH) in Intel system.
- Because different processors and RAM require different signaling, a given Northbridge will typically work with only one or two classes of CPU's and generally only one type of RAM.

- Diagram :

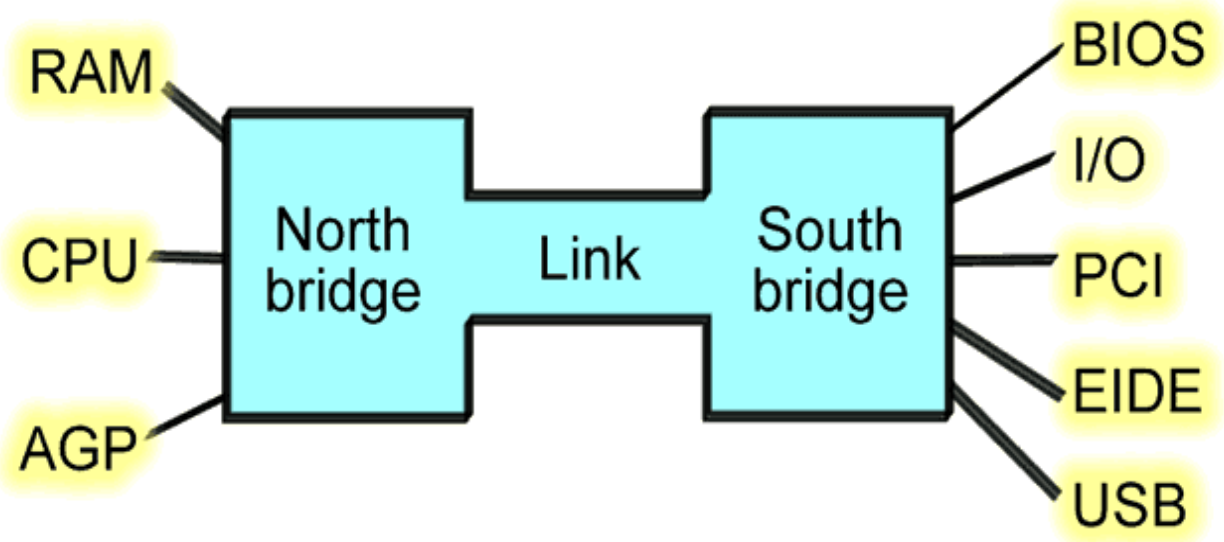

❖South Bridge:

- The South Bridge is one of the two chips in the core logic chipset on a personal computer (PC) motherboard, the other being the North Bridge.
- The South Bridge typically implements the slower capabilities of the motherboard in a North Bridge/South Bridge chipset computer architecture.
- The South Bridge can usually be distinguished from the North Bridge by not being directly connected to the CPU rather the North Bridge ties the South Bridge to the CPU.
- Through the use of controller integrated channel circuitry, the North Bridge can directly link signals from the I/O units to the CPU for data control and access.
- A south bridge chipset handles all of a computer's I/O functions such as USB, audio, serial, the system BIOS, the ISA bus, the interrupt controller and the IDE channels.
- Link for understanding: https://www.youtube.com/watch?v=eJn-qPHtfzI

NORTHBRIDGE
VERSUS
SOUTHBRIDGE

NORTHBRIDGE	SOUTHBRIDGE
A chip in the core logic chipset architecture on the northern section of the PC motherboard	A chip in the core logic chipset architecture on the southern section of the PC motherboard
Located in the northern section of the motherboard	Located in the southern section of the motherboard
Directly connected to the CPU	Connects to the CPU via northbridge
Connects to the CPU, RAM, AGP, PCI Express slots and southbridge	Connects to the PCI bus slots, BIOS, SATA and IDE connectors, USB ports and northbridge
Faster	Not as fast

Bus slots

- **Expansion of Buses**
- Expansion buses connect devices to the motherboard using the motherboard's data bus.
- They allow the flow of data between internal and external devices that make up the computer system.
- Early computers moved data between devices and the processor at about the same rate as the processor.
- As processor speeds increased the movement of data through the bus became a bottleneck.
- Therefore, the design capability of the buses needed to evolve, too.
- Designers divided the external data bus into two parts:

  1. System bus: This supports the CPU. RAM. And other motherboard components and runs at speeds that support the CPU.

  2. Expansion bus: This supports any add-on devices by means of the expansion slots and runs at a steady rate, based on the specific bus design.

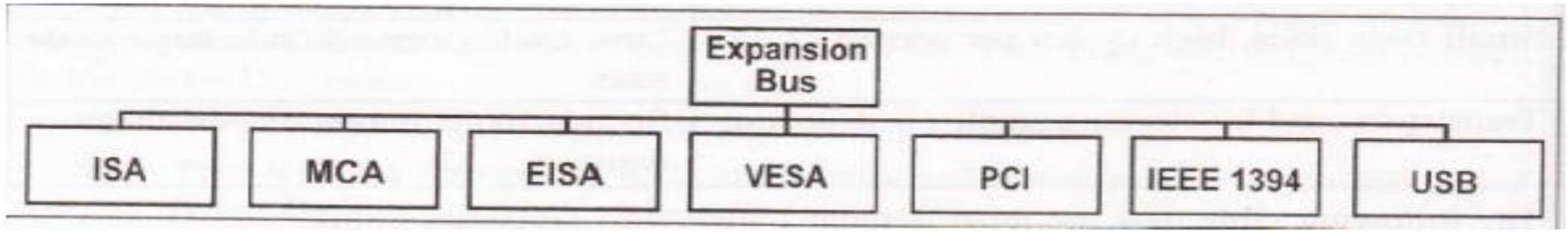

Bus organization & Bus standards

- Bus standards are necessary to connect external peripherals to the system and they are work on proper clock cycle speed.
- **Bus Width**
- A bus is a channel over which information flows.
- The wider the bus the more information can flow over the channel.
- For example a wider highway can carry more cars than a narrow one.
- **Bus speed**
- The speed of the bus reflects how many bits of information can be sent across each wire per second.
- This would be analogous to how fast the car is driving on our analogical highway.
- Most buses transmit one bit of data per line, per clock cycle, although newer high performance buses like AGP may actually move two bits of data per clock cycle, doubling performance.
- **Bus Bandwidth**
- Bandwidth also called throughput, refers to the total amount of data that can theoretically be transferred on the bus in a given unit of time.
- Using the highway analogy, if the bus width is the number of lanes, and the bus speed is how fast the cars are driving, and then the bandwidth is the product of these two and reflects the amount of traffic that the channel can convey per second.

- **Bus Interfacing**
- On a system that has multiple buses, circuitry must be provided by the chipset to connect the buses and allow devices on one talk to devices on the other.
- This device is called a “bridge”, the same name used to refer to a piece of networking hardware that connects two dissimilar networks.
- **Bus Mastering**
- On the higher-bandwidth buses, a great deal of information is flowing through the channel every second. Processor is required to control the transfer of this information.
- The processor is a “middleman” and it is far more efficient to “cut out” the middleman and perform the transfer directly.
- It is done by having capable devices take control of the bus and do the work themselves; devices that can do this are called bus masters.

BUS Organization

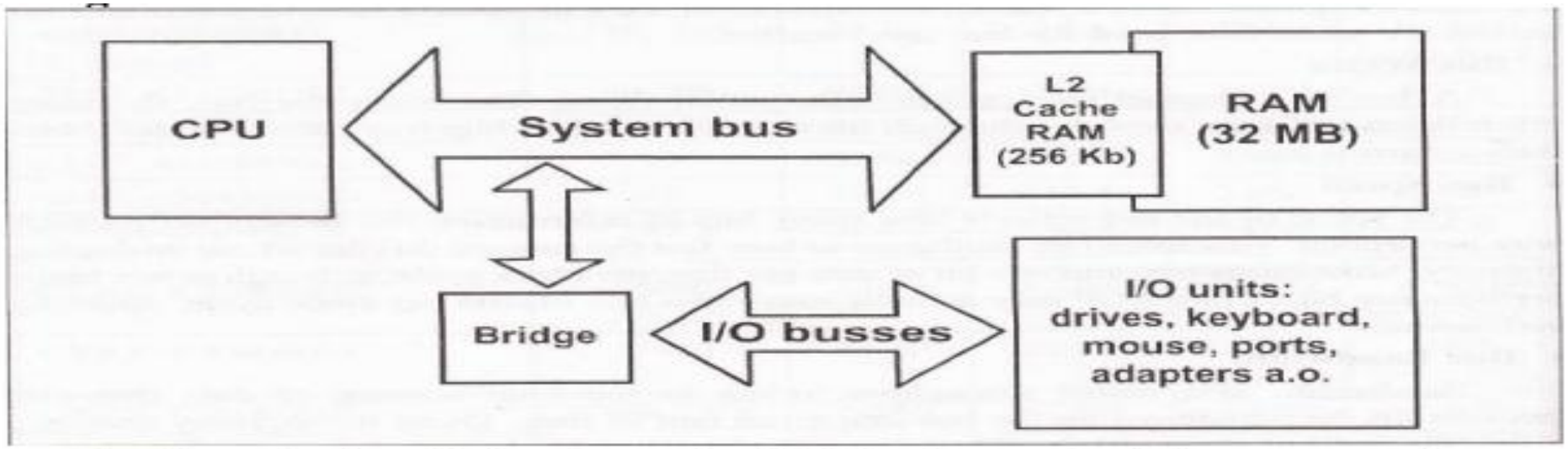

- A bus is a collection of wires, thorough which data is transmitted from one part of a computer to another.
- When used in reference to personal computers, the term bus usually refers to internal bus.
- This is a bus that connects all the internal computer components to the CPU and the main memory.
- There is also an expansion bus that enables expansion boards to access the CPU and memory.

- **Most modern PC’s have at least four buses.**
- The Processor bus This is the highest level bus that the chipset uses to send information to and from the processor.
- The Cache Bus Higher level architectures, such as those used by the Pentium Pro and Pentium II employ a dedicated bus for accessing the system cache.
- This is sometime called a backside bus.
- The Memory Bus This is a second level system bus that connects the memory subsystem to the chipset and the processor. In some systems, the processor and the memory buses are the same thing.
- The Local IO Bus This is a high speed input/output bus used for connecting performance critical peripherals to the memory, chipset and processor. For example, video cards, disk storage devices, high speed network interfaces generally use a bus of this sort.
- The two most common local IO buses are VESA local bus and PCI bus.
- The Standard IO Bus This bus is used for slower peripherals like mice, modems, regular sound cards, low speed networking. It is also compatible with older devices.

Industry Standard Architecture (ISA) Bus

- ISA stands for Industry Standard Architecture which is the most common bus in the PC world.
- The ISA bus is still stay in the newest computers. Despite the fact that it is largely unchanged since it was expanded to 16 bits.
- The ISA bus eventually became a narrow to performance and was enlarge with additional high- speed buses.
- There are still many devices for which the ISA's speed is more than sufficient (an example of standard moderns).

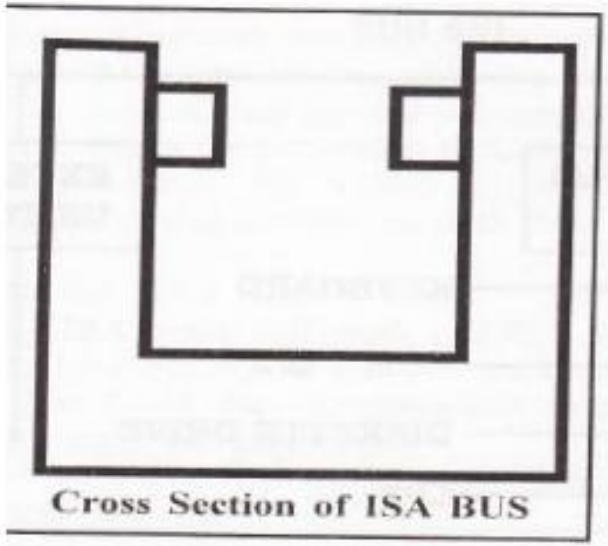

Cross Section of ISA BUS

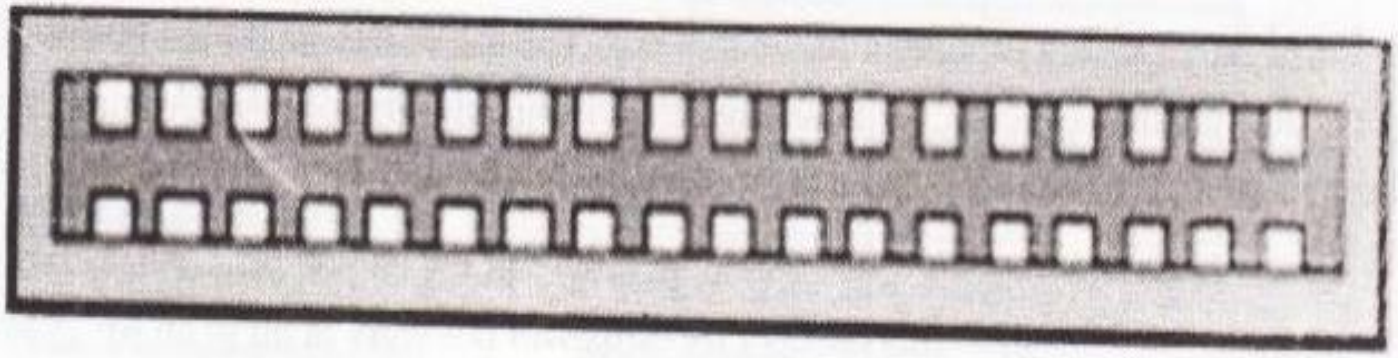

8 bit PC Bus slot

- The original ISA bus on the IBM PC was 8 bits wide, reflecting the 8 bit data width of the Intel 8088 processor's system bus, and ran at 4.77 MHz.
- With the speed of the first 8088s. The IBM AT was introduced which was use the Intel 80286.
- The ISA bus provides reasonable throughput for low-bandwidth devices and virtually assures compatibility with almost every PC on the market.
- The ISA bus has divided in two units, internal unit and external unit, which are work with the other devices.
- The internal ISA bus: This is used on the simple ports, like keyboard, diskette drive serial and parallel ports.
- The External expansion bus: This can be connected with l6 bit ISA adapters.

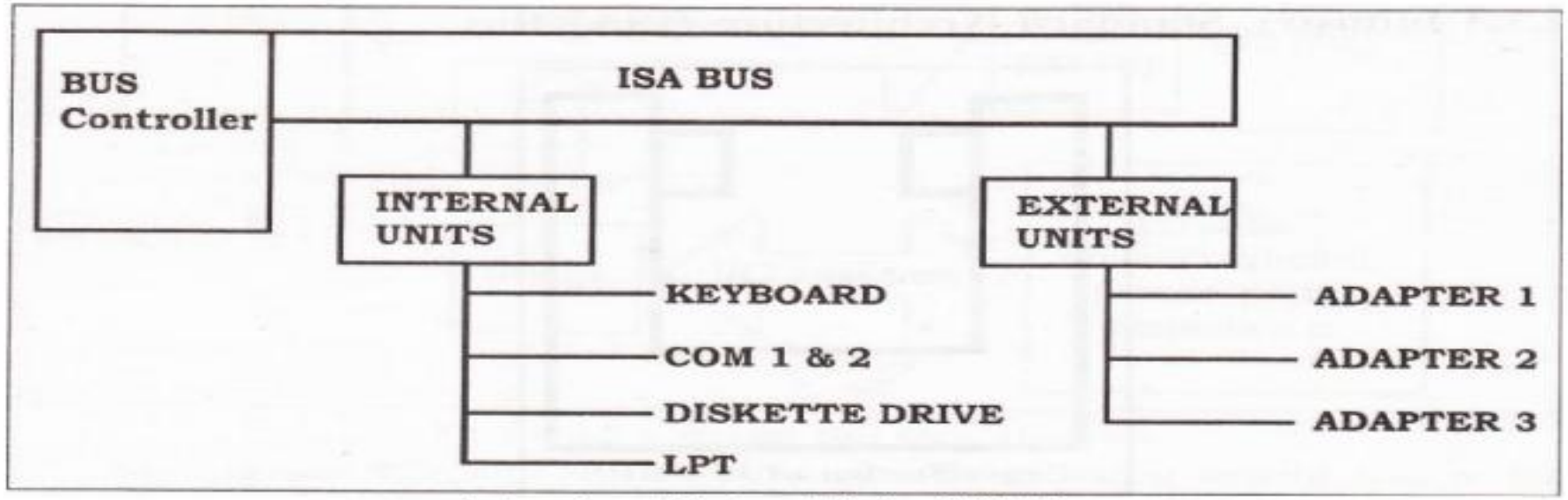

Internal and External Units of ISA Bus

Peripheral Component Interconnect (PCI) Local Bus

- The most popular local I/O bus, the Peripheral Component Interconnect (PCI) bus was developed by Intel and introduced in 1993.
- It is geared specifically to fifth and sixth generation systems, although the latest generation 486 motherboards use PCI as well.
- Data width=32 bit
- Speed=33 Mhz
- Throughput= 264 MB/sec
- The device installed on PCI slots are: wifi adapter, TV tuner, satellite receiver and various controller.

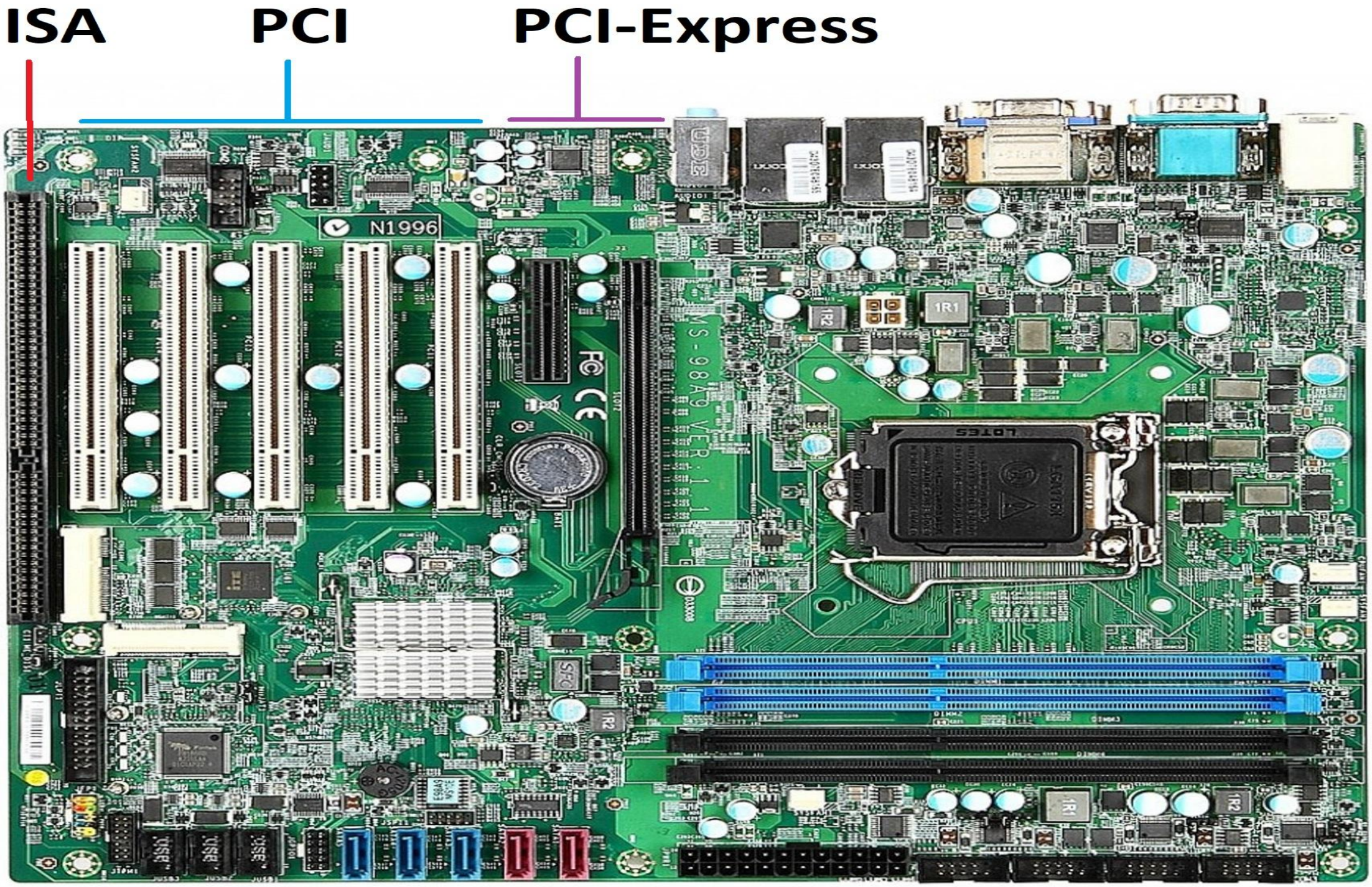
ISA
PCI
PCI-Express
N1996
MS-98A9 VER:1.1

- **PCI Bus performance-**
- The PCI bus provides superior performance to the VESA local bus. PCI is the highest performance than general I/O bus currently used into PCs. This is clue to several factors:

    1. **Burst Mode**: The PCI bus can transfer information in a burst mode.
    2. **Bus Mastering**: PCI supports full bus mastering. which leads to improved performance.
    3. **High Bandwidth Options**: The PCI bus specification version 2.1 calls for expandability to 64 bits and 66 MHz speed; if implemented this would quadruple bandwidth over the current design.

- **PCI Expansion Slots-** The PCI bus offers more expansion slots than most VLB implementations. Most PCI systems support 3 or 4 PCI slots. Also, the PCI bus offers a great variety of expansion cards compared to VLB. The most commonly found cards are video cards, high-speed networking cards. Hard disk drives are also on the PCI bus but are normally connected directly to the motherboard on a PCI system.
- **PCI Internal Interrupts-** The PCI bus uses its own internal interrupt system for dealing with requests from the cards on the bus.
- **PCI Plug and Play-** PCI systems were the first to popularize the use of Plug and Play. The PCI bus is part of the Plug and Play standard developed by Intel with co-operation from Microsoft and many other companies. The PCI chipset circuitry handles the identification of cards and works with the operating system and BIOS to automatically set resource allocations for compatible peripheral cards.

Some detailed specifications are presented in the table below:

Type	Working Topology	Bus Type	Clock Speed	Transmission Speed
PCI	Parallel transmission	32-bit 64-bit	33MHz 66MHz	32-bit: 133MB/s, 266MB/s 64-bit: 266MB/s, 533MB/s
PCI-X	Parallel transmission	64-bit	66MHz 100MHz 133MHz (Up to 533MHz)	533MB/s; 800MB/s; 1066MB/s
PCI-E (PCIe 1.0 8x version)	Serial transmission	8-bit	2.5GHz	4GB/s

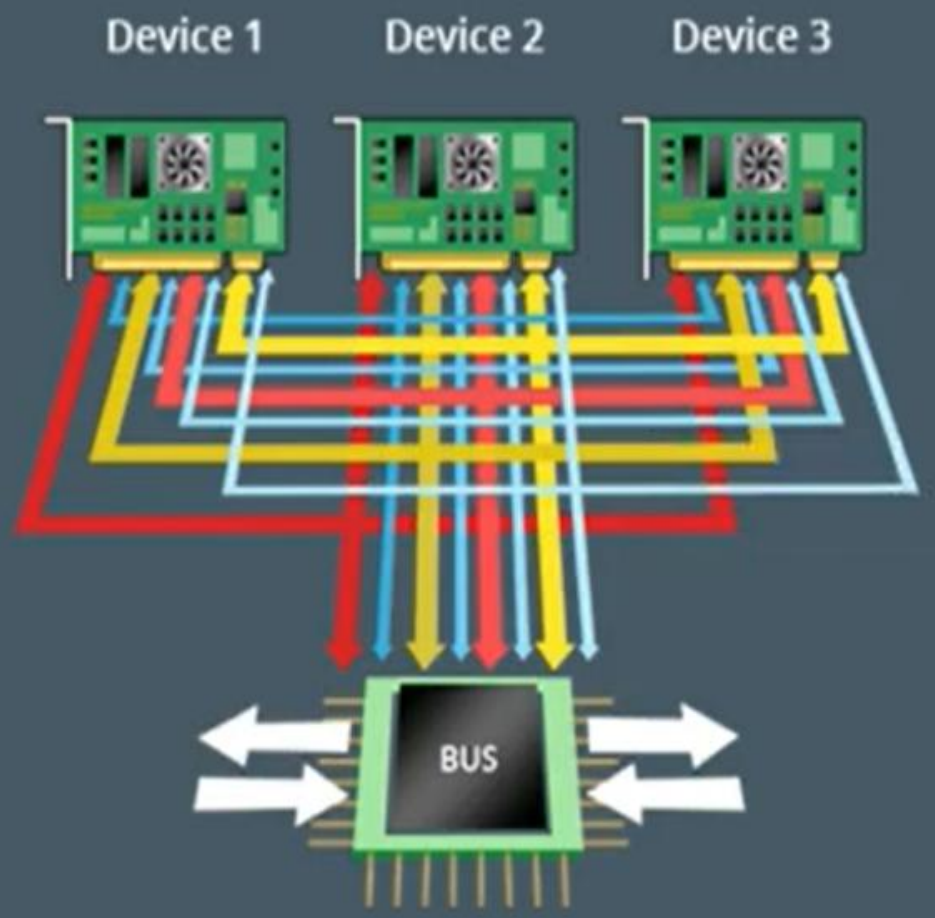

PCI/PCI-X

Parallel Connection

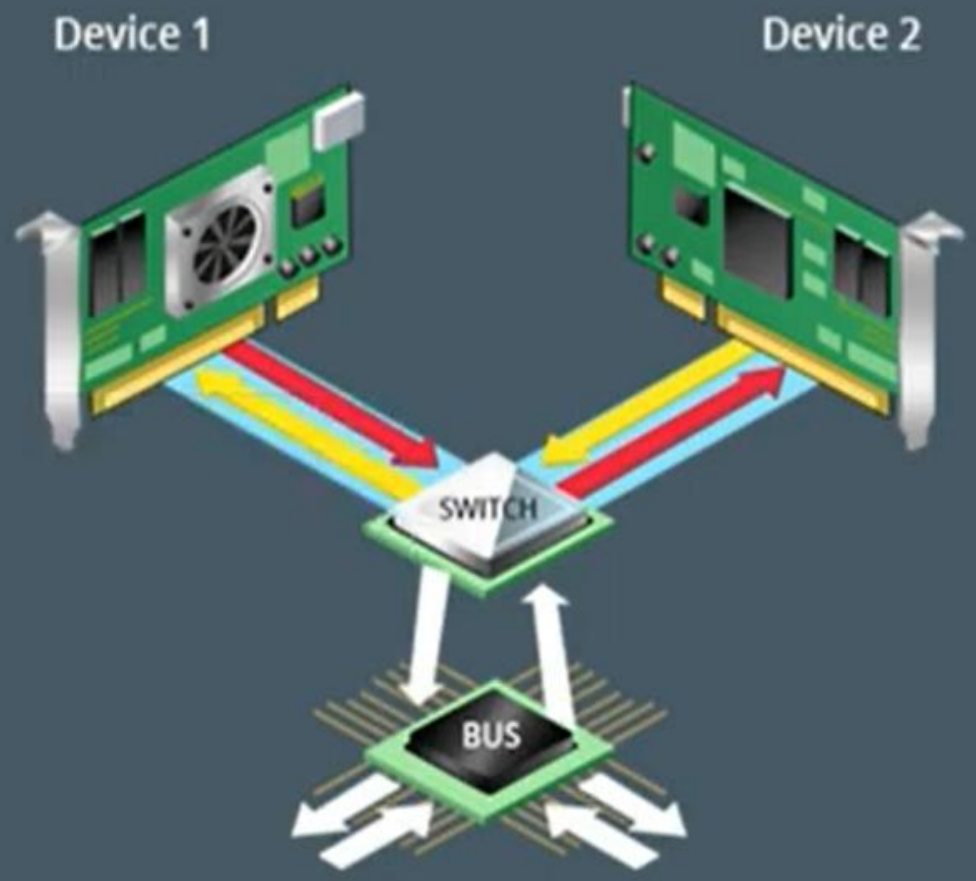

PCI-E

Serial Connection

Accelerated Graphics Port

- In the early days of PCI, the major market for that technology was the high performance display adapter.
- Today, the PCI market includes NICs, sound cards, Ultra Direct Memory Access (UDMA) controllers, and DVD (digital video disc) interfaces.
- The variety of devices posed a problem for display-card designers: Having more cards on a single bus slowed down the performance, just when the increasing popularity of 24-bit graphics and 3D rendering called for greater demands on the display system.
- The AGP removes all the display data traffic from the PCI bus and gives that traffic its own pipe.
- It also provides a direct path to the system memory for handling graphics. This procedure is referred to as Direct Memory Execute (DIME).
- Data width=32 bit
- Speed=66 Mhz and above
- Throughput= 528 MB/sec
- Directly connected to motherboard
- Design to provide fast access to video
- AGP connectors are found only on Pentium II-based and later computers or on similar CPUs from non-Intel vendors.

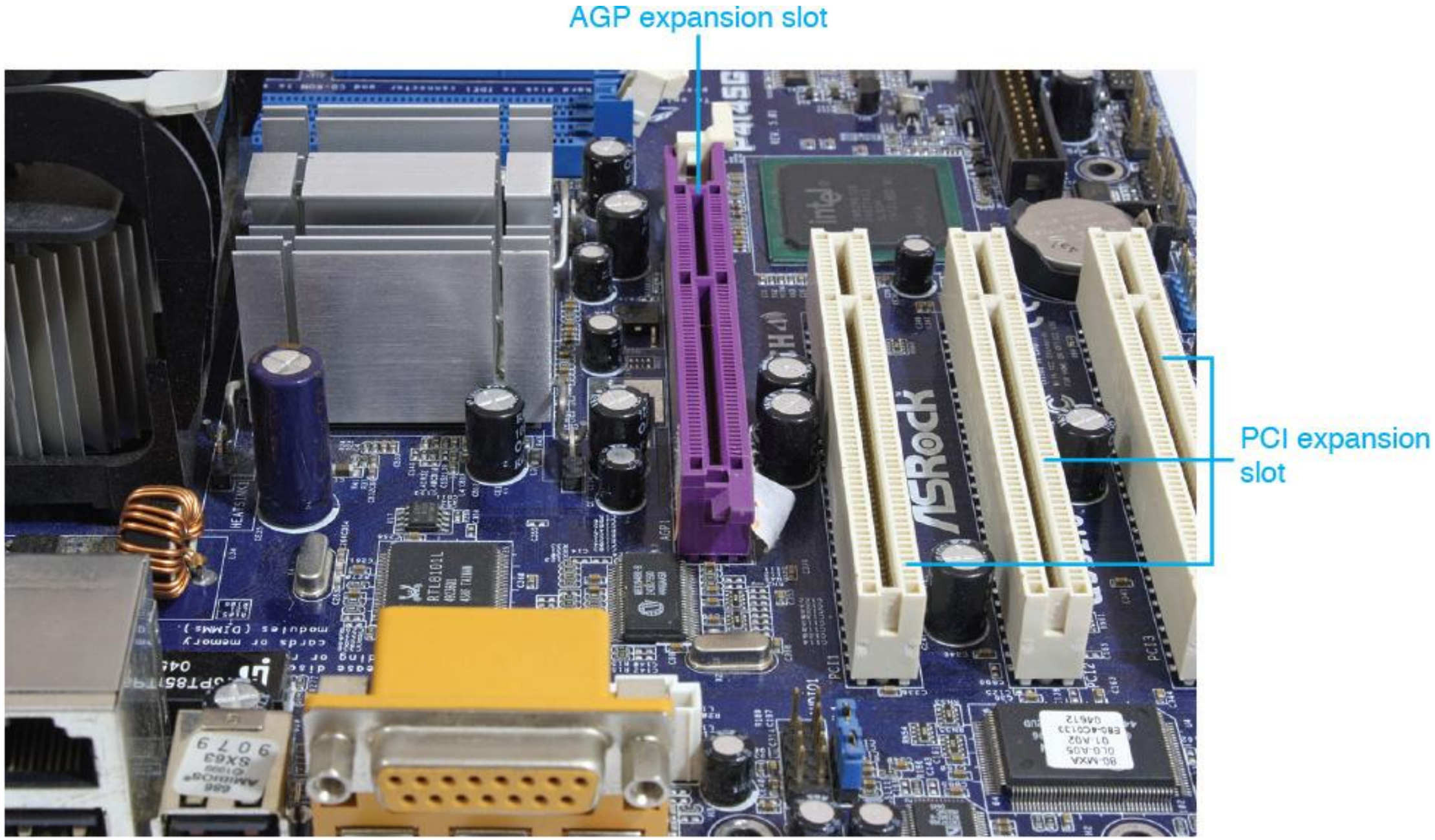
AGP expansion slot
PCI expansion slot

AGP	PCI
AGP is a port	PCI is a bus
AGP normally has a clock speed of 33 MHz	PCI bus normally has a clock speed of 66 MHz
AGP normally has a transfer rate of 2, 133 MB/s	PCI normally has a transfer rate of 132 MB/s
AGP has a non local memory and is able to access the system the video card.	PCI has a local memory and relies solely on the memory of memory directly.
AGP receives information simultaneously which makes the graphics quicker and smoother.	PCI receives information in “groups” instead of all at once.

Universal Serial Bus

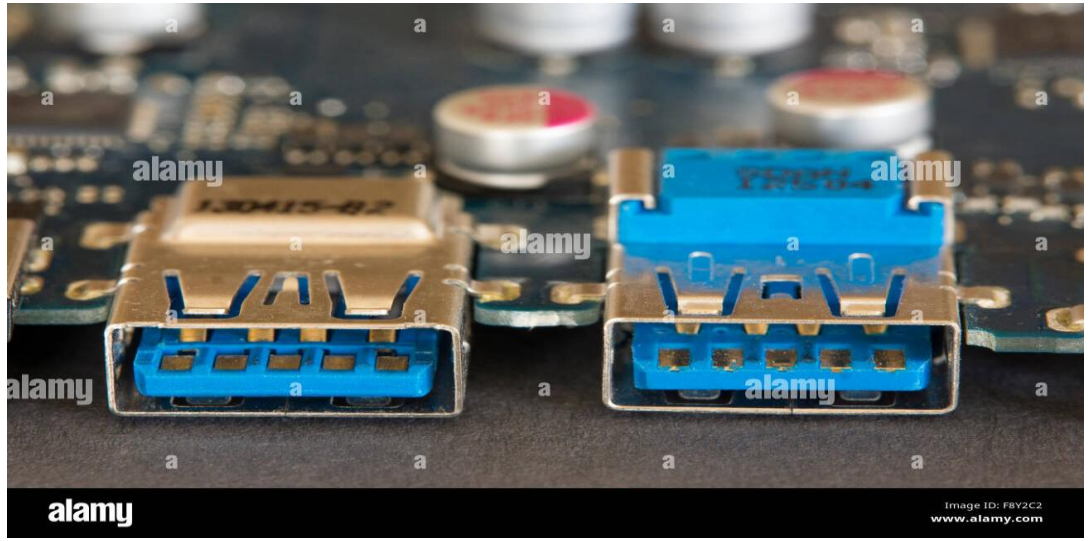

- The newest addition to the general PC bus collection, the USB connects external peripherals such as mouse devices, printers, modems, keyboards, joysticks, scanners, And digital cameras to the computer.
- The USB port is a thin slot, most new motherboards offer two located near the keyboard.
- They can also be provided through an expansion card.
- USB supports isochronous (time-dependent) and asynchronous (intermittent) data transfers.
- Isochronous connections transfer data at a guaranteed fixed rate of delivery.

- This is required for more demanding multimedia applications and devices.
  - ✓ Data width = 1 bit
  - ✓ Speed = 3 MHz
  - ✓ Throughput:
  - ✓ USB 1.1 = 12 MB/sec
  - ✓ USB 2.0 = 60 MB/sec
  - ✓ USB 3.0 = 640 MB/sec
  - USB is hot swappable. Hot swappable means that devices can be added and removed easily while the computer is still running without having to reboot.
  - USB devices may be daisy chained. 127 devices can be connected through a single USB Port.

Personal Computer Memory Card Industry Association (PC Card)

- The Personal Computer Memory Card Industry Association was founded to provide a standard bus for laptop computers. So it is basically used in the small computers.
- **Small Computer System Interface:**
- Short for Small Computer System Interface, a parallel interface standard used by Apple Macintosh computers, PC's and Unix systems for attaching peripheral devices to a computer.

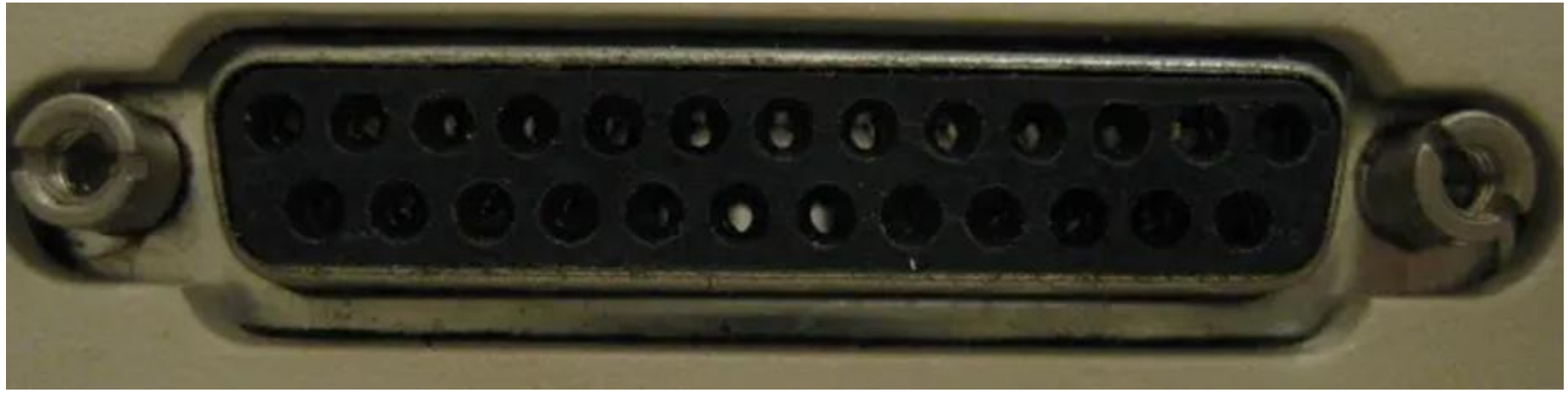

Personal Computer Memory Card Industry Association (PC Card)

- The **PCMCIA** was a trade organization established in 1989 to create standards for peripheral expansion for laptop computers. The devices created under these standards are most commonly referred to as **PC Cards**.
- **Key Features**
- **Form Factor:** Roughly the size of a credit card, though thicker.
- **Hot-Swappable:** They were among the first technologies to allow users to plug and unplug peripherals without restarting the computer.
- **Versatility:** PC Cards were used to add functions that weren't built into early laptops, such as:
  - Extra RAM (Memory)
  - Modems and Network Interface Cards (NICs)
  - Hard drives
  - Wireless connectivity (Wi-Fi)

VESA Local Bus (VLB)

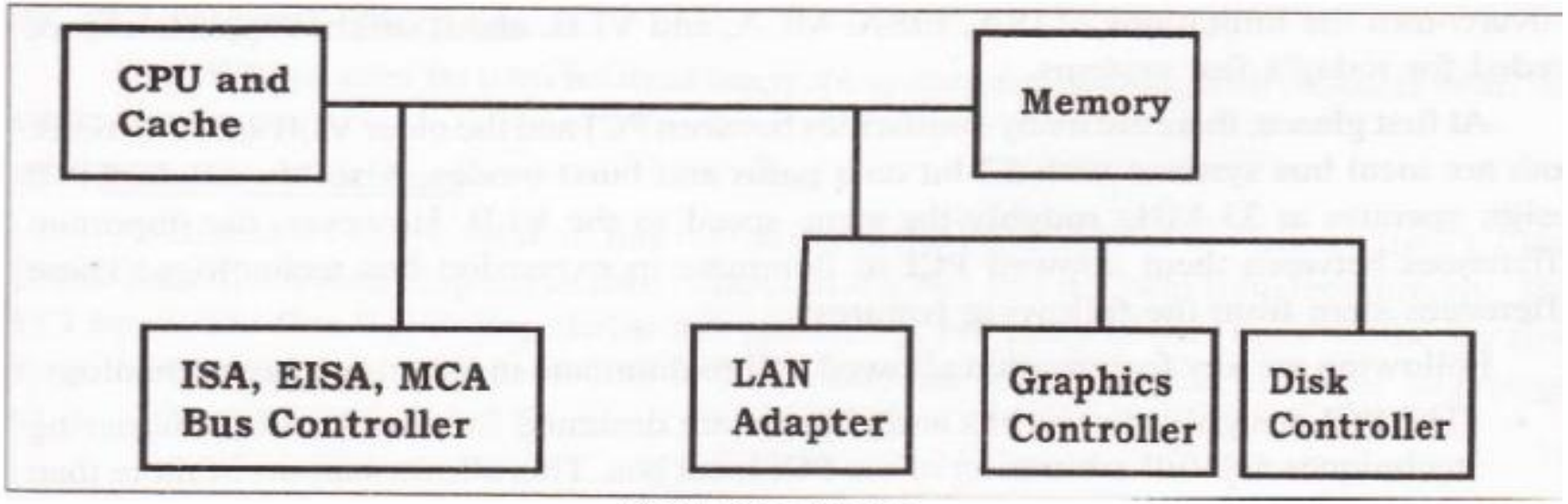

VESA Bus Design

- VESA stands for the Video Electronics Standards Association, a standards group that was formed to address video-related issues in personal computers.
- This is the first local bus to gain popularity.
- The VESA local bus (also called VL-Bus or VLB for short) was introduced in 1992.

- The major reason for the development of VESA or VLB was to improve video performance in PCs.
- It is an extension of the ISA bus, an ISA card can be used in a VLB slot.
- There were also several key problems with the VLB implementation.

(1) The design was strongly based on the 486 processor. And adapting it to the Pentium caused a host of compatibility and other problems.

(2) The bus itself was tricky electrically; for example, the number of cards that could be used on the bus was low (often only two or even one), and occasionally there could be timing problems on the bus when more than one card was used.

(3) The bus did not support bus mastering properly since there was no good arbitration scheme, and did not support Plug and Play.

VESA Local Bus

- **The VESA Local Bus (VL-bus) was a 32-bit expansion bus used in IBM-compatible personal computers with 486 CPUs. It was created by the Video Electronics Standards Association (VESA).**

❑ How it worked

- **The VL-bus was a high-speed path between the CPU and peripherals like video and disk**
- **It was used alongside the ISA bus, which was more dominant at the time**
- **The VL-bus provided a wider bandwidth for peripheral data transfer than the ISA bus**
- **The VL-bus was a short-lived expansion bus**

❑ Characteristics

- **The VL-bus ran at speeds up to 40 MHz**
- **The motherboard could have up to three VL-bus slots**
- **VLB connectors were usually inline with ISA connectors**

❑ Why it was important

- **The VL-bus was popular in the early 1990s**
- **It provided a standardized, high-speed conduit to accelerate video operations**

IEEB 1394 FireWire High-Performance Serial Interface.

- IEEE 1394, known also by its Apple trade name of FireWire. While connecting external peripheral, IEEE 1394 has been a possible replacement of SCSI. This high-speed serial interface allows up to 62 devices on a chain, at data transfer rates of up to 50 MB per second.

- This new interface offers several advantages: a hot swap capability (the ability to add and remove components while the machine is running), small and inexpensive connectors, and a simple cable design.

- Right now, few devices support1394, but it is seen as a viable method for connecting multimedia devices like camcorders and other consumer electronic devices to PCs.

MCA BUS

- Micro Channel Architecture (MCA) is a parallel bus used in IBM computers from the 1980s to the mid-1990s. It was used in the Personal System/2 (PS/2) line of computers, as well as other IBM products.

- It supported expansion cards, such as video cards, sound card, and network interface cards. MCA memory expansion cards could house memory modules, allowing users to add RAM without replacing the motherboard.

- There were two different versions of the MCA expansion bus:
  - 16-bit, with 116 pins
  - 32-bit, with 172 pins

16-bit MCA memory expansion card

MCA BUS

- IBM introduced MCA as a successor to the older AT (Advanced Technology) and ISA (Industry Standard Architecture) buses. It offered faster data transfer rates and a more streamlined design.

- **What it did:**

- MCA was a 16- or 32-bit bus that replaced the ISA bus in IBM computers.
- It was faster than the ISA bus, running at 10 MHz.
- MCA supported bus mastering, which placed a mini-processor on each expansion card.
- MCA automatically configured adapter cards, so users didn't need to adjust jumpers.
- Plug-in cards were software configurable, so users needed to do minimal intervention to configure them.

- **Why it's obsolete:**

- IBM charged other manufacturers royalties to use the MCA technology.
- The PCI bus architecture eventually replaced MCA.

EISA (Extended Industry Standard Architecture)

- An evolution of ISA and (theoretically) backward compatible with it, including the speed (8 MHz), so the increased data throughput is mainly due to the bus doubling in size-but you must use EISA expansion cards.
- It has its own DMA arrangements, which can use the complete address space.
- On advantage of EISA (and Micro Channel) is the ease of setting up expansion cards-plus them in and run the configuration software which will automatically detect their settings.

EISA (Extended Industry Standard Architecture)

- An evolution of ISA and (theoretically) backward compatible with it, including the speed (8 MHz), so the increased data throughput is mainly due to the bus doubling in size-but you must use EISA expansion cards.
- It has its own DMA arrangements, which can use the complete address space.
- On advantage of EISA (and Micro Channel) is the ease of setting up expansion cards-plus them in and run the configuration software which will automatically detect their settings.

EISA (Extended Industry Standard Architecture)

- **Extended Industry Standard Architecture (EISA)** was a 32-bit bus standard introduced in 1988 by a group of nine PC manufacturers (known as the "Gang of Nine") to compete with IBM’s proprietary Micro Channel Architecture (MCA).
- **Data Width:** 32-bit (upgraded from ISA's 16-bit).
- **Backward Compatibility:** Its most unique feature. The slots were designed to be deeper; a standard 16-bit ISA card would fit in the top half of the slot, while a 32-bit EISA card would seat deeper to hit a second row of pins.
- **Speed:** It ran at the same **8.33 MHz** clock speed as ISA to maintain compatibility, but because it was 32-bit and supported "bus mastering," it could achieve a much higher throughput of **33 MB/s**.
- **Usage:** Primarily found in high-end servers and workstations because of its high cost and complexity.

History: The most common types of expansion slots that were launched for the PC throughout its history

Bus Type	Bus Width	Bus Speed	Bus Bandwidth
ISA - Industry Standard Architecture	8/16	8.33 MHZ	8 MB/S | 16 MB/S
MCA - Micro Channel Architecture	16/32	5 MHZ	10 MB/S | 20 MB/S
EISA - Extended Industry Standard Architure	32	8.33 MHZ	33 MB/S
VESA Local Bus - Video Electronics Standards Associations	32	25 - 40 MHZ	128 - 132 MB/S
PCI v1.0 - Peripheral Component Interconnect	32	33 MHZ	133 MB/S
PCI v2.0	64	33 MHZ	264 MB/S
PCI X (Extended) v1.0	64	66 MHZ	512 MB/S
AGP - Accelerated Graphics Ports	32	66 MHZ	266 - 2133 MB/S
PCI X v2.0	64	266 MHZ & 533 MHZ	2132 MB/S & 4266 MB/S

SMPS (Switch Mode Power Supply)

- There are two types of power supply
- 1) Linear Power Supply 2) Switch Mode Power Supply
- Computer power supply units (PSU) deliver the power to the PC hardware via a number of cables with connectors.
- Most of today's supply their CPU with a separate 12 volt cable.

LINEAR POWER SUPPLY (LPS)

- A **linear power supply** is the one that is *used to convert the unregulated ac or dc input signal into regulated dc output.*
- But the principle of operation of LPS and SMPS is different. Also, *it is considered to be a less efficient approach in which continuous heat generation causes wastage of power.* It incorporates a voltage regulator in series that suits low output power applications.

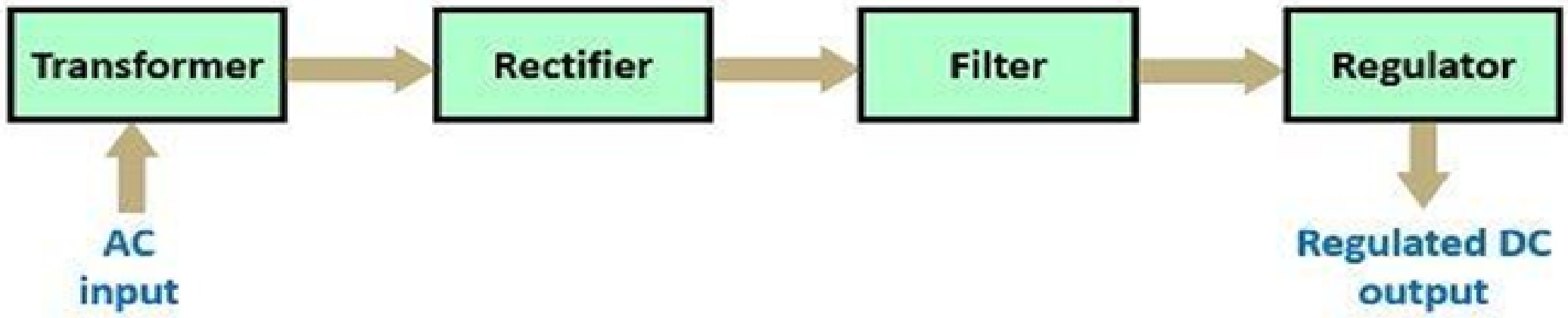

Block diagram of Linear Power Supply

What is a SMPS?

SMPS

Is an electronic circuit that converts power using switching devices that are turned on and off at high frequencies, and storage components such as inductors or capacitors to supply power when the switching device is in its non-conduction state.

SMPS

- Various electrical and electronic loads are provided power using batteries. But batteries do not provide regulated power as they offer voltages of value either very high or very low. So, to obtain regulated dc output, SMPS is used.
- ***Unlike linear power supply, which uses the standard linear method of voltage regulation, a switch mode power supply is a device that performs voltage regulation of unregulated signal by using semiconductor switching methods.***
- It is considered to be highly efficient because it *lesser power consumption thereby showing a decrease in the amount of heat dissipated.* Thus, has replaced traditional linear power supply units.
- SMPS includes a switching transistor (power MOSFET) for the purpose of voltage regulation.

SMPS block diagram & working

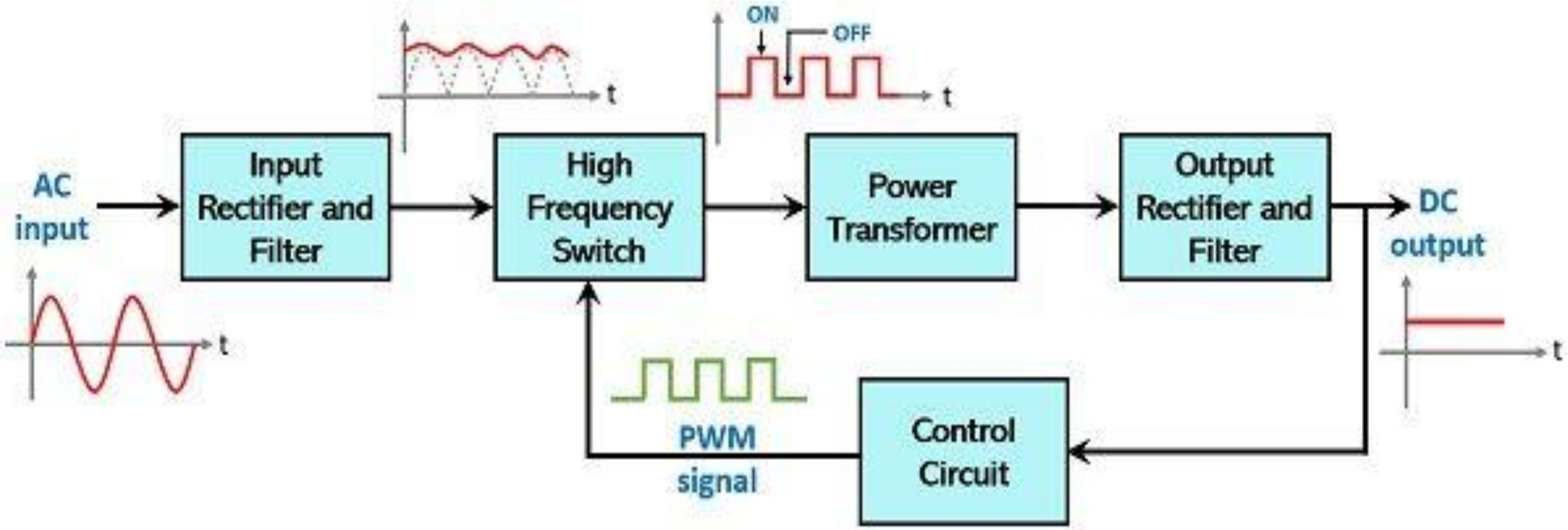

Block diagram of Switch Mode Power Supply

Major Components of SMPS:

- *The major components that constitute SMPS are as follows*:

1. Input rectifier and Filter (Diode rectifier and capacitor filter)
2. High-frequency switch (Power transistor or MOSFET)
3. Power transformer
4. Output rectifier and Filter (Diode rectifier and capacitor filter)
5. Control circuit (comparator and pulse width modulator)

- **1. Input rectifier**
- This is the primary stage of the converter. The rectifier and filter circuit is used to convert AC supply into DC voltage.
- But this DC output voltage is unregulated. It has many variations as the circuit inside is only used to convert and not process it accurately.
- This unregulated DC voltage is then given to a high-frequency converter consisting of switching devices.
- **2. High Frequency Switch (Inverter)**
- This is the main heart of SMPS. Because the incoming DC voltage is unregulated and not processed properly, it cannot be directly fed to the output circuit.
- So, the processing task is done by power-electronic switching devices. Power transistor, MOSFET, diac, triac, etc. are employed here which switches on and off according to variations.
- These switching devices have very low resistance and they are capable of resisting high currents. They thus create high frequency pulsating DC signal; which is processed properly and less variable.

- **3. Power Transformer**
- The high-frequency DC output is fed to the power transformer for step-down reduction.
- The high voltage DC output is converted into a low voltage DC output.

- **4. Output Rectifier and Filter**
- The rectified output DC is then filtered using the filter section consisting of inductors and capacitors.
- The output from the transformer is again fed to the rectifier and filter circuit to get a constant and steady DC output voltage.
- Basically, this filter smoothens the DC output.

- **5. Control Circuit**
- The control circuitry present here acts as the feedback circuit for the complete unit. This involves a comparator along with a pulse width modulator (PWM). The dc output from the rectifier and filter is fed to the control circuit where the error amplifier which acts as a comparator, compares the obtained dc voltage with the reference value.
- if the dc output is greater than the reference value then the chopping frequency is to be decreased. The decrease in chopping frequency will reduce the output power and so the dc output voltage. However, if the dc output is less than the reference value then the chopping frequency is increased. When chopping frequency is raised then the dc output voltage will get increased.
- The pulse width modulator in the above circuit is responsible for generating a fixed frequency pulse width modulated waveform whose duty cycle controls the chopping frequency.

- **Advantages**

1. It is highly efficient than linear power supplies. Typically, the efficiency of SMPS lies between **60% – 95%**.
2. Due to the high-frequency operation of the device, the overall size is small and less bulky. Thus, is compact.
3. It is inexpensive because heat dissipation is less.
4. The obtained output voltage can be more or less than the supply input.

- **Disadvantages**

1. The transient spike generation due to switching action is one of the major issues. This may lead to cause RF interference thus, isolation is mandatory.
2. The circuit is complex. Also, voltage regulation (controlling) is tricky.
3. Proper filtration is necessary to deal with noise and spikes.

- **Applications of SMPS**
- The devices invented under the latest technologies require a highly efficient power supply which is offered by SMPS.
- Thus, it finds applications in various power amplifiers, personal computers, security and railway systems, television sets, motor drives, etc.

Linear Power Supply Vs. SMPS

Linear regulated power supply (LPS)	Switched mode power supply (SMPS)
▪ Low efficiency	• High efficiency
▪ Switch operates in active region	▪ Switch operates in cutoff or saturation region
▪ More power dissipation	▪ Less power dissipation
▪ Bulky supply frequency transformer	▪ Small size high frequency transformer
▪ Tight voltage regulation	• Voltage regulation poorer
▪ Easy control	• Complex control

SMPS Pin assignments

CPU 4+4 Pin

Motherboad 20+4 Pin

SATA Cable

Floppy4 Pin

PCI-e 6 Pin
PCI-e 6+2 Pin

Peripheral 4 Pin

- **20 + 4 Pin ATX / Motherboard Connector**
- This is the main ATX connector that supplies power to your motherboard and other components like RAM, Low-end graphics card, PCI cards that are connected to your motherboard. Earlier motherboards have 20 pin sockets only but now modern-day motherboards require 24-pin power connectors.
- Therefore nowadays all the SMPS comes with 24 pin detachable connector (20 + 4) that can be split into 20 pin and 4 pin cables.

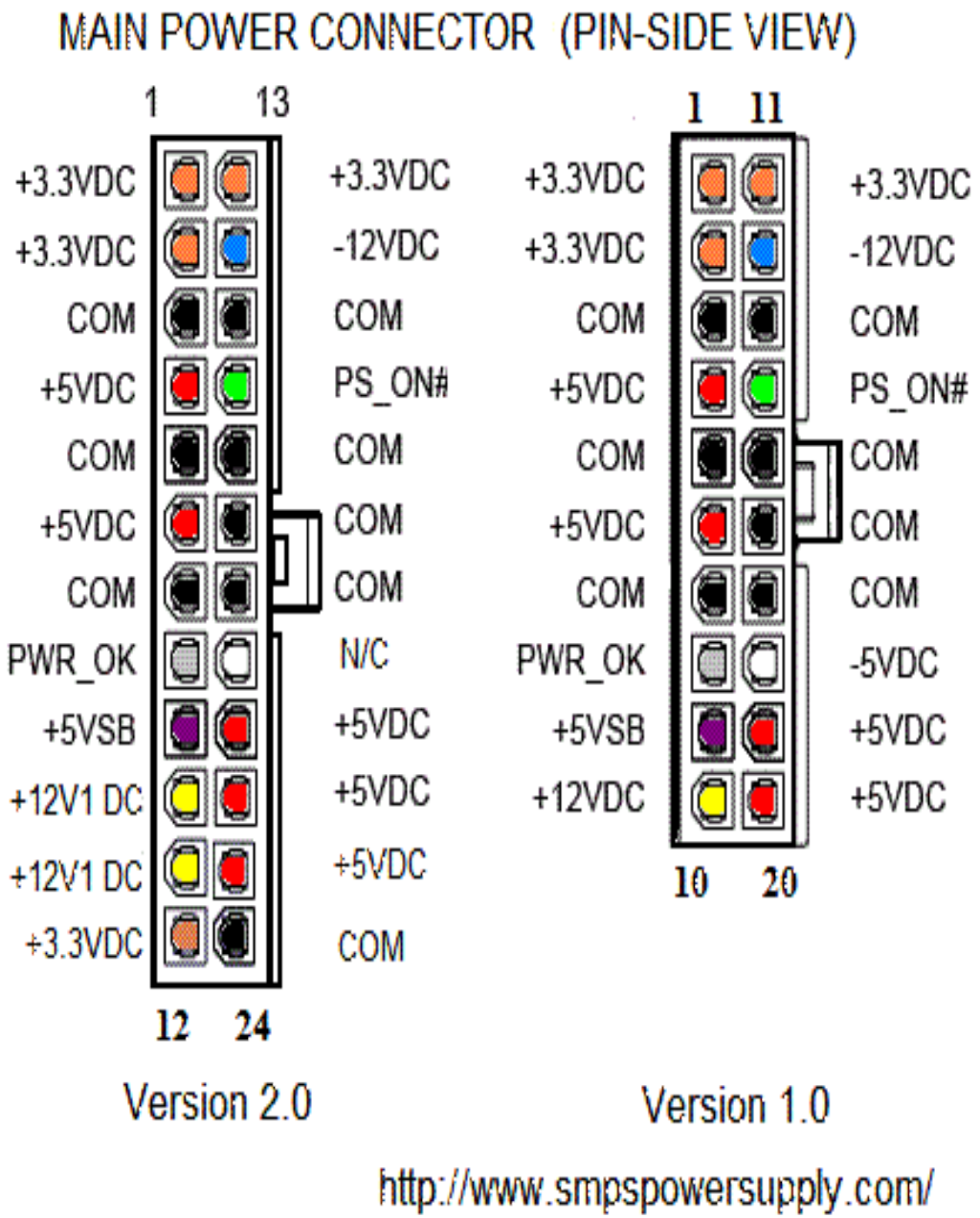

http://www.smpspowersupply.com/

- **CPU 4 + 4 Pin Connector**
- This is the 12 Volt connector that supplies power to your CPU or Processor.
- Some motherboards have 4 pins 12V CPU socket and some have 8 pins 12V socket, therefore most of the good power supplies come with 8-pin (4 + 4) detachable connectors which can be split into two 4 pin connectors.
- **SATA Power Connector**
- This power connector is used to power up SATA devices that mostly include Hard Disks, DVD Writers / Drives.
- **Floppy 4 Pin Connector**
- This 4 pin power connector is used to power floppy drives. Floppy Drives are not being used commonly, but in some cases they can prove very useful.

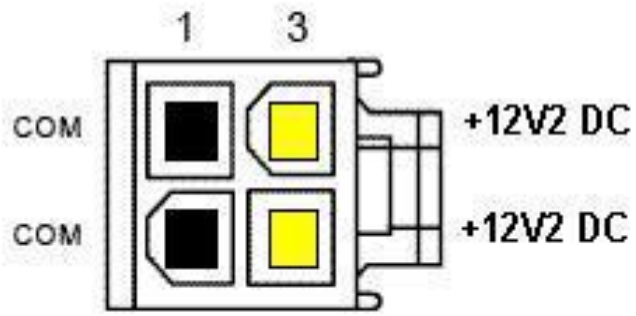

+12V2 DC Connector

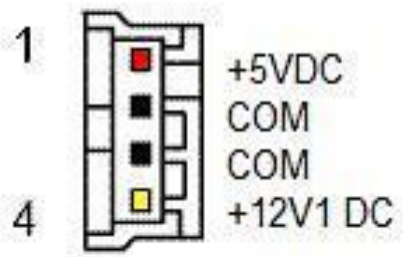

Floppy Drive Connector

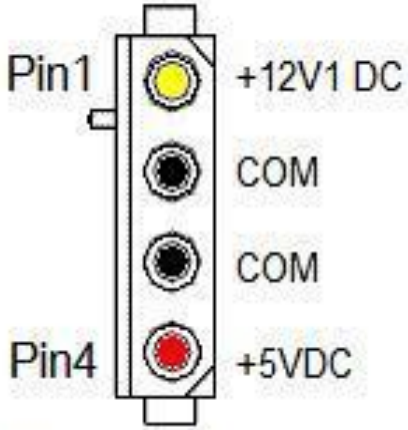

Peripheral Connector

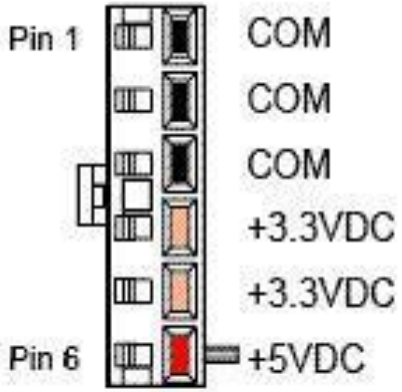

Aux Power Connector
(ATX12V v.1)

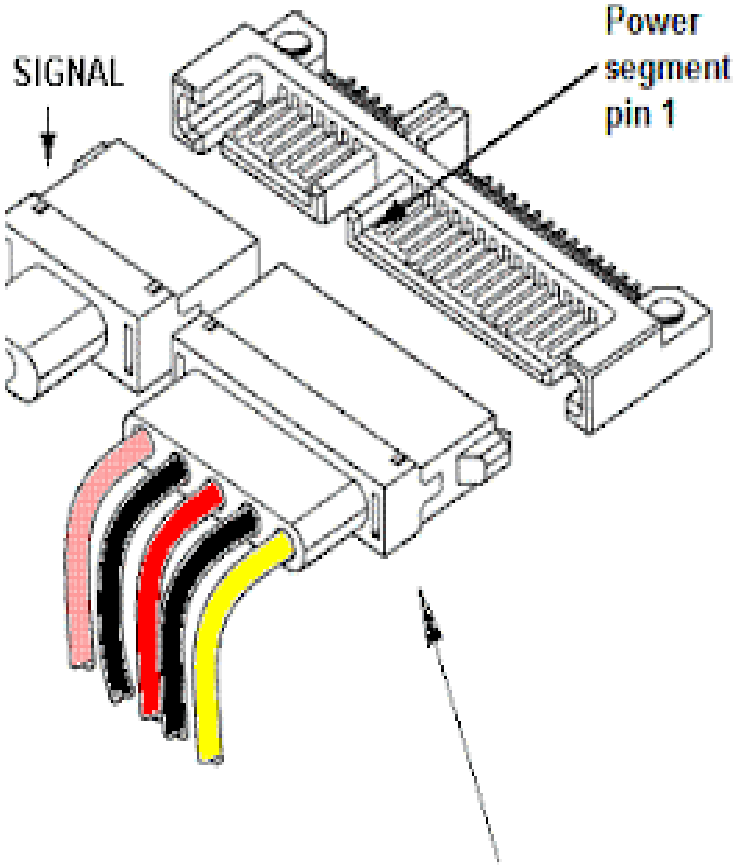

SERIAL ATA POWER CONNECTOR

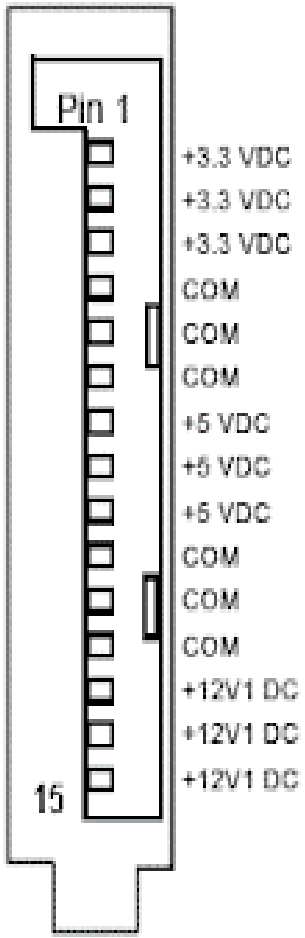

- **Peripheral 4 Pin Molex Connector**
- Peripheral 4 Pin Molex Connector is used to provide power to IDE devices and other peripherals like Fans, case lights etc. You can also use this Molex 4 pin connector to power other devices like SATA devices, Graphics cards etc. by the use of converters or adapters e.g. Molex to SATA power connector etc.
- **PCI-e 6 Pin / PCI-e 8 Pin Connector**
- PCI-e 6 Pin or PCI-e 6+2 Pin are 12 Volt Connectors that are used to provide power to mid to high range graphics cards that require extra amount of power for their working. Budget and low-end graphics cards do not need them as they draw their power from the motherboard PCI-Express x16 slot only. Older mid to high-end graphics card comes with PCI-e 6 Pin slot while the newer high-end graphics comes with PCI-e 8 Pin slot. The new PCI Express 8 Pin cable can provide a maximum of 150 Watts power which is double that of the PCI Express 6 Pin cable i.e. 75 Watts.