Unit-3 Processor & BIOS

Topics to be Discussed

- Processor
- Multi Core processors
- Co-Processor
- Cache Memory
- BIOS Components & Functions

Central Processing Unit (CPU)

- The **Central Processing Unit (CPU)** or simply processor is considered as the “brain” of any computer. It is the most important component or element of a computer system in terms of computing power.
- It is located in the CPU socket onto the computer motherboard. Sometimes, it is also called a **microprocessor**.
- Either a fan or heat sink (usually both) is attached from this component. This device draws away the heat a processor produces

- Every computer has at least one central processing unit or processor. This component performs most of the calculations and performs 90 percent of all the computer’s functions.
- A CPU or processor reads data, processes (calculates) the data according to the program instructions, and gives the results of the calculations. The data in the instructions tells the CPU processor what to do.
- The speed of processor is measured in MHz or GHz
- All the digital devices have processors(Mobile, smart watches etc.)

These metal pins or dots establish the electrical connection between the CPU and the motherboard when inserted into the socket. They allow the CPU to receive power and communicate with other components on the motherboard.

Components or Parts of CPU (Central Processing Unit)

- A CPU involves three primary sections. They are as:
- Control unit (CU)
- Arithmetic and logic unit (ALU)
- Registers

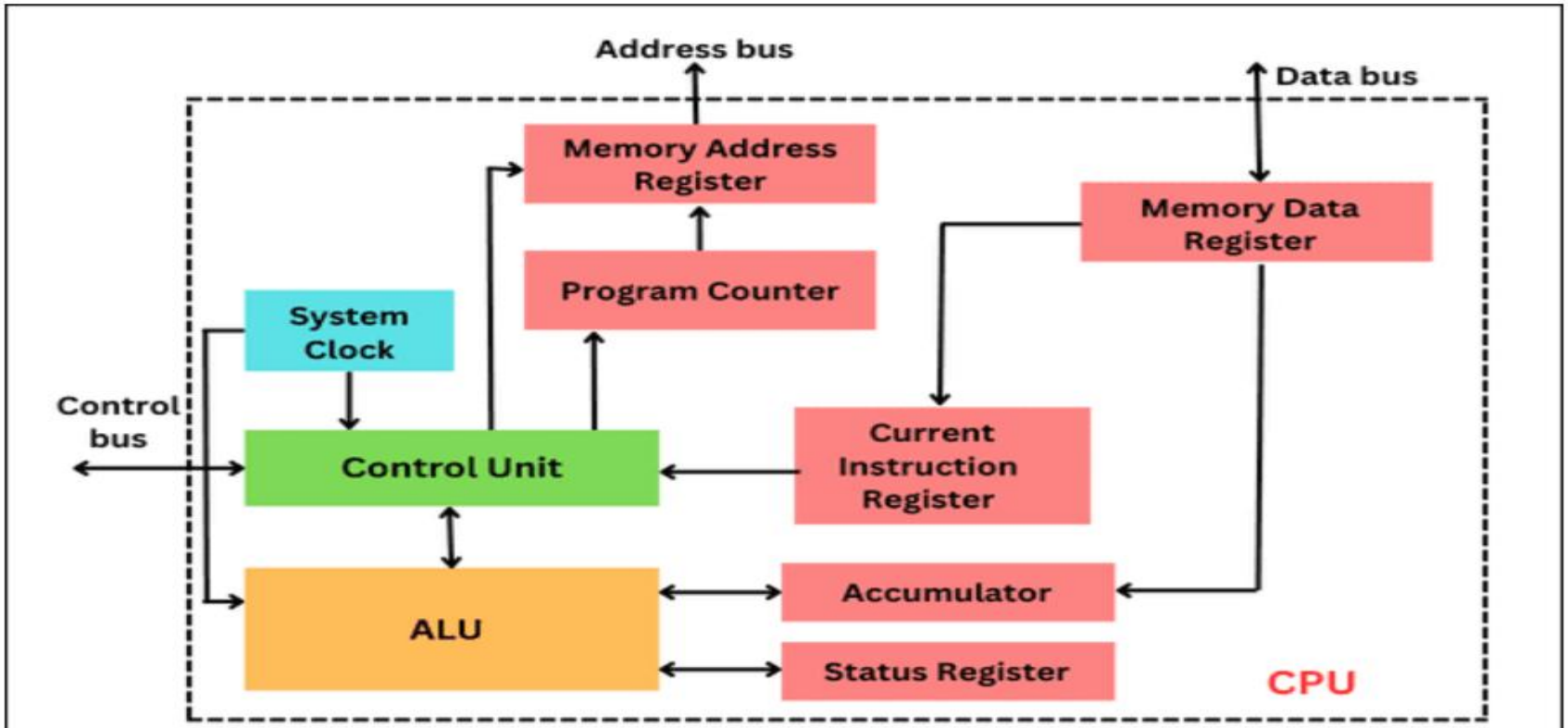

Fig: Basic components of Central Processing Unit

- **Arithmetic Logic Unit (ALU)**
- The arithmetic and logic unit is a specialized circuit that performs mathematical calculations and logical operations on the data
- ALU can perform all the basic arithmetic functions, such as addition, subtraction, multiplication, and division. In addition, the ALU handles logical operations like AND, OR, and NOT, which are essential for decision-making and data processing. ALU can also perform complex tasks. A CPU may have more than one ALU to carry put the specific functions.

- **Control Unit (CU)**
- A control unit is an electronic circuit that is connected by all the parts of a computer. The function of a control unit is to coordinate all the processor's activities and manage the flow of information through the processor. It directs the flow of data and instructions between different parts of a computer.
- The control unit receives the information from the input devices, fetches the data and instructions from the memory, and then reads each instruction to carry out appropriate action. Remember that the control unit itself does not execute any instruction but instructs to other parts of the system, such as ALU, to do so.
- For instance, if an application program lets an instruction to multiply three numbers, the control unit directs the task to the ALU, which does the calculation.

- **Registers**
- Registers are a small specialized internal memory within the CPU itself. They act as a temporary storage area for storing data and instructions during processing
- Registers provide high-speed accessing to data and execute instructions quickly. There are various types of registers within the processor. Each serves a specific purpose in the CPU's operation. They are as:

- **Current instruction register (CIR):** This register stores the current instruction being decoded and executed.
- **Accumulator (ACC):** ALU uses this register to temporarily store data during the calculation.
- **Memory address register (MAR):** This register stores the address of the memory location currently being read from or written to.
- **Memory data register (MDR):** This register stores the data which has just read from the memory or data which is about to be written to the memory.
- **Program counter (PC):** This register stores the address where the next instruction is to be fetched.
- **Status Register (SR):** This register contains bits which can be set or cleared depending on the operations.

- **System Clock**
- The system clock generates the timing signals required for the synchronization of various CPU operations. It generates clock pulses at a specific frequency, commonly known as the clock speed.
- A clock speed determines the number of instructions a CPU processor can execute per second. A higher clock speed generally results in faster processing, but it also affects power consumption and heat generation.

- ***CPU packaging*** is used for control damage of the ***processor***.
- A protective exterior ***packaging*** is supplied to the actual ***microprocessor*** and its associated electronic circuits. It's the ***packaging*** you see when looking at a processor, not the microprocessor. ***The packaging*** of the manufacturer is typically ceramic or plastic.
- The ***packaging*** structure links the processor's slot to the motherboard interface.
- CPU Packaging Types Include LGA, PGA, And BGA
- way of connecting to the motherboard is called packaging.

- 1. LGA
- The LGA stands for Land Grid Array or Flat Grid Array Package.
- Typically, this package is used by common Intel desktop CPUs. For example Intel from 775 all desktop processors, AMD and other processors.
- The feature of this package is that the contacts are on the CPU PCB and the whole back of the CPU is covered as a grid. The motherboard provides the pins for the motherboard to communicate with the CPU.

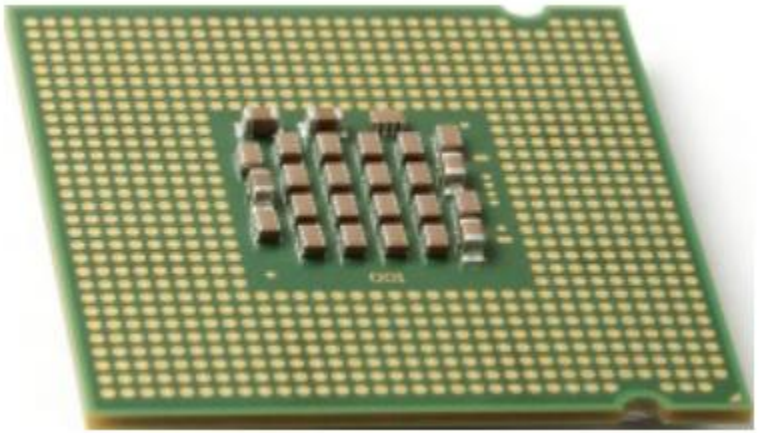

- **2. PGA**
- PGA stands for “Pin Grid Array,” or “Pin Grid Array Package.”
- AMD’s main desktop CPU, the former MQ Mobile Core series, essentially uses the PGA package. For example, most desktop processors before the Intel 775 and most mobile processors end in M, MQ; Almost all AMD home desktop processors.
- Unlike the LGA, the PGA focuses on the pins on the CPU PCB, so you see a row of pins on the CPU and the motherboard only needs to provide pins to connect
- PGA pins are stronger than LGA pins

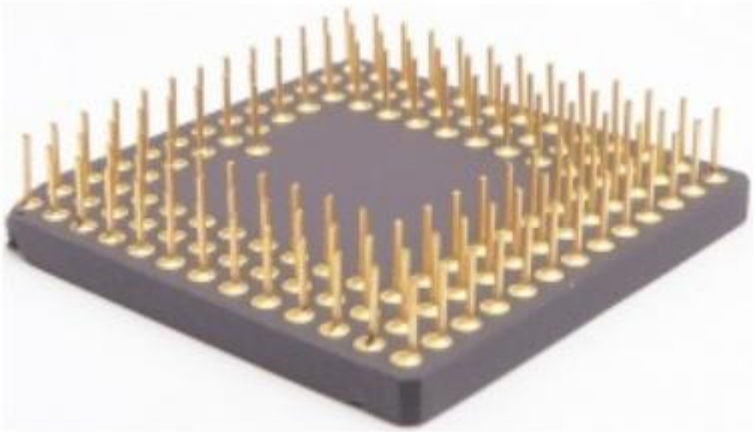

- **3. BGA**
- BGA stands for “Ball Grid Array”, or “Ball Grid Array package”.
- Currently, most Intel laptop CPUs and smartphone CPUs use this package.
- With a BGA package, the pins are eliminated, replaced by tiny copper pads, each with a tiny ball of solder held to it.
- Elimination of the pins saves the cost of the pins, plus pin connections are less reliable than directly soldered connections.

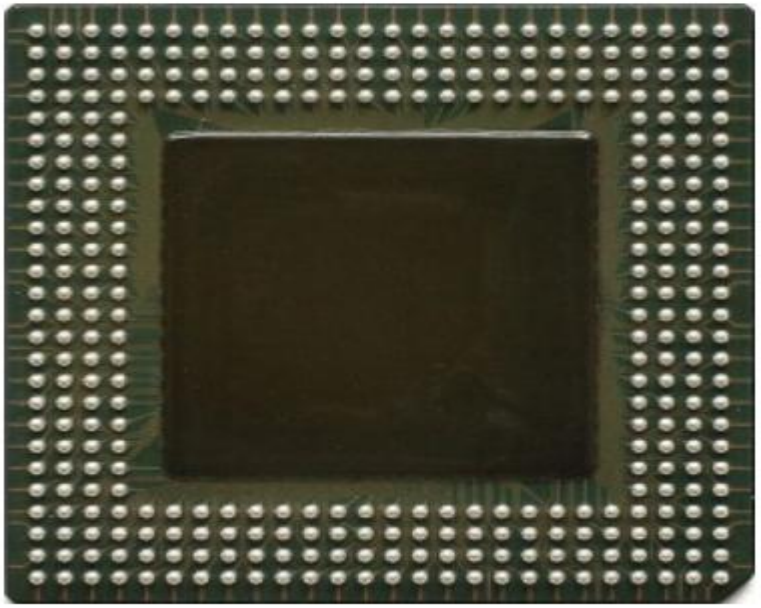

- **Cache Memory**
- Cache memory is a special type of high-speed memory that helps to improve the CPU performance. It serves as a buffer between the CPU and main memory (RAM) that provides the much faster data access than RAM. Cache memory is closely located within the CPU itself.
- This memory stores frequently accessed data and instructions, enabling faster retrieval and reducing the CPU's dependence on slower main memory.

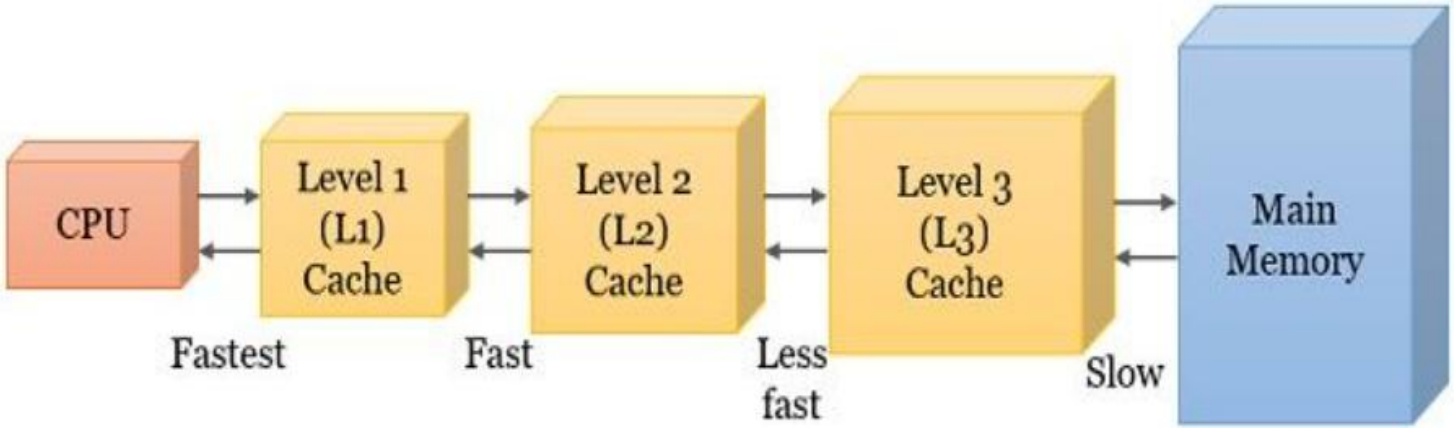

Cache Organization in Computer

- **L1 Cache**: It is the smallest among all the caches and is much faster than any other cache.
- **L2 Cache**: Comparatively, the L2 cache is larger and slower than the L1 cache.
- **L3 Cache**: It is larger and slower than both the L1 and L2 cache.

Types of Cache Memory

L1: Level 1 cache

- First level of cache
- Memory is present inside the CPU itself.
- It can work at the same speed as of the CPU.
- Each core of CPU have its own level 1 cache.

L2: Level 2 cache

- Second level of cache
- It can be present inside or outside the CPU.
- They are slower than L1.
- Each core of CPU can have its own L2 cache or they can share single L2 cache.

L3: Level 3 cache

- Third level of cache
- It is located outside the CPU.
- It is slower than L1 & L2.
- It is shared by all the cores of a CPU.

- A **system bus** is a single computer bus that connects the major components of a computer system, combining the functions of a data bus to carry information, an address bus to determine where it should be sent or read from, and a control bus to determine its operation.

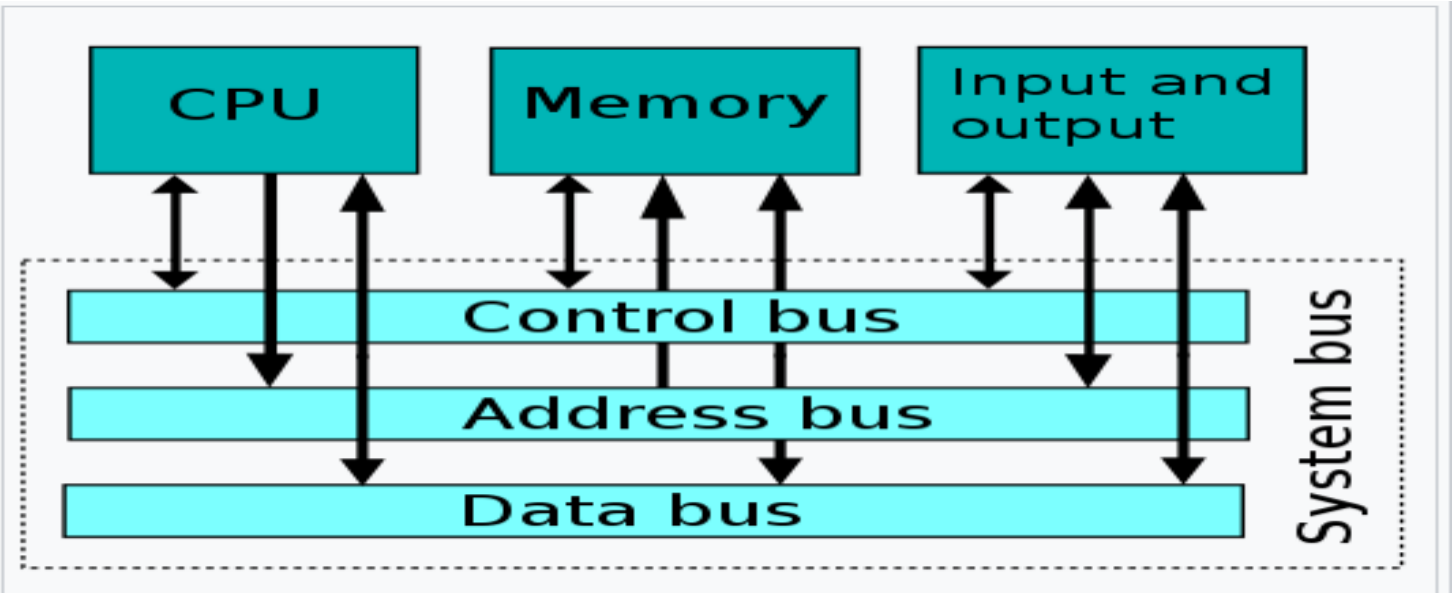

- The system bus combines the functions of the **three main buses**, which are as follows:
- The **control bus** carries the control, timing and coordination signals to manage the various functions across the system.
- The **address bus** is used to specify memory locations for the data being transferred.
- The **data bus**, which is a bidirectional path, carries the actual data between the processor, the memory and the peripherals.

- **CPU Operations**
- The four primary Functions of a processor are fetch, decode, execute and write back.
- **Fetch**- is the operation which receives instructions from program memory from a systems RAM.
- **Decode**- is where the instruction is converted to understand which other parts of the CPU are needed to continue the operation. This is performed by the instruction decoder
- **Execute**- is where the operation is performed. Each part of the CPU that is needed is activated to carry out the instructions.

- **There are five types of general purpose processors-**
- Microcontroller(Reading I/P-Responding O/P)
- Microprocessor
- Embedded Processor(controls Mech/Elec Fun)
- DSP (Digital Signal Processor: Analog/Digital)
- Media Processor (Image/video/audio)

- **CISC-Complex Instruction Set Computing**
- Most PC's use CPU based on this architecture.
- For instance Intel and AMD CPU are based on CISC architectures.
- Typically ClSC chips have a large amount of different and complex instructions.
- The philosophy behind it is that hardware is always faster than software therefore one should make a powerful instruction set, which provides programmers with assembly instruction to do a lot with short program.

- **RISC-Reduce Instruction Set Computing**
- RISC chips evolved around the micl-1980 as a reaction at CISC chips.
- The philosophy behind it is that almost no one uses complex assembly language instructions as used by CISC- and people mostly use compilers which never use complex instructions.
- Therefore fewer, simpler and faster instructions would be better than the large complex and slower CISC instructions.
- However more instructions are needed to accomplish a task.
- Finally, it's easier to write powerful optimized compilers, since fewer instructions exist.
- Apple for instance uses RISC chips.

CISC	RISC
Emphasis on hardware	Emphasis on software
Includes multi-clock complex instruction.	Single-clock , reduced instruction only
Memory to memory – "LOAD"and "STORE" incorporated in instructions.	Registerto register- "LOAD"and "STORE" are independent instruction.
Small code size, high cycle per second	Low cycles per second ,large code size
Transistors are used for storing complex instruction	Spend more transistor on memory registers.

Computer processor

5 types of CPU (Processors) are there-.

Single Core Processor

Dual Core Processor

Multi Core Processor

Quad Core Processor

Octa Core Processor

Architecture of multicore processors

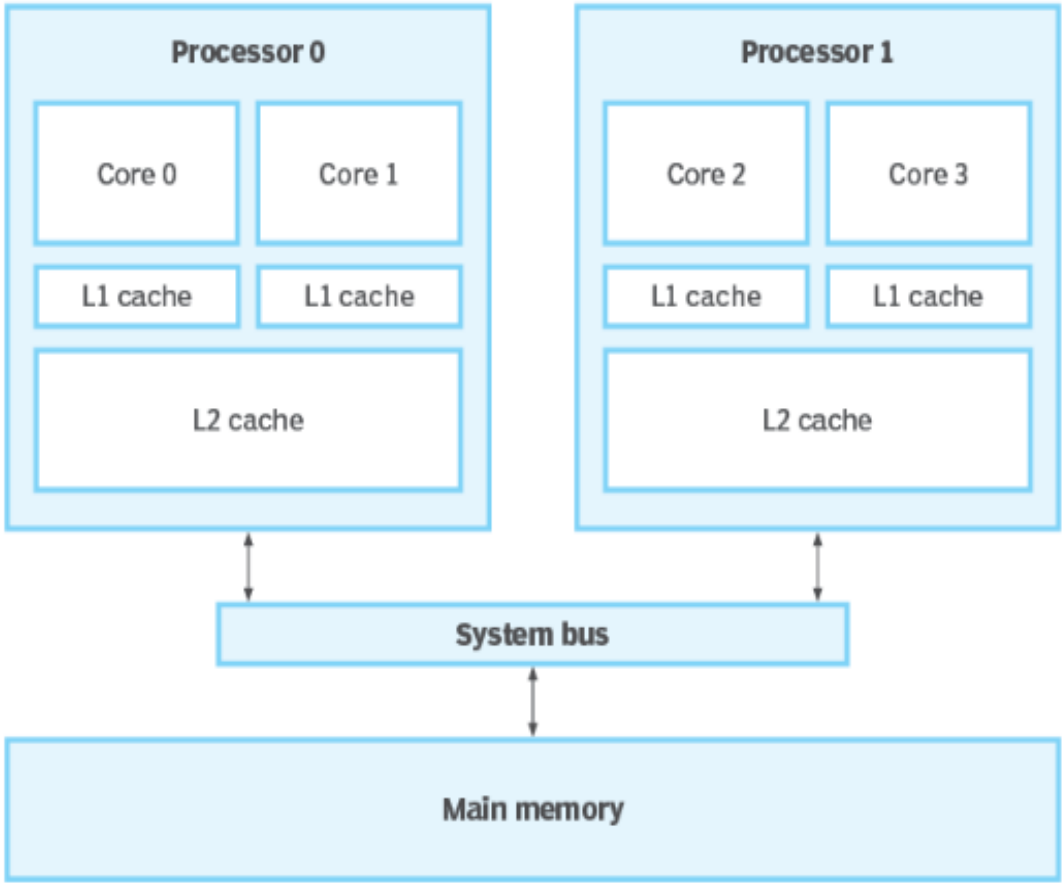

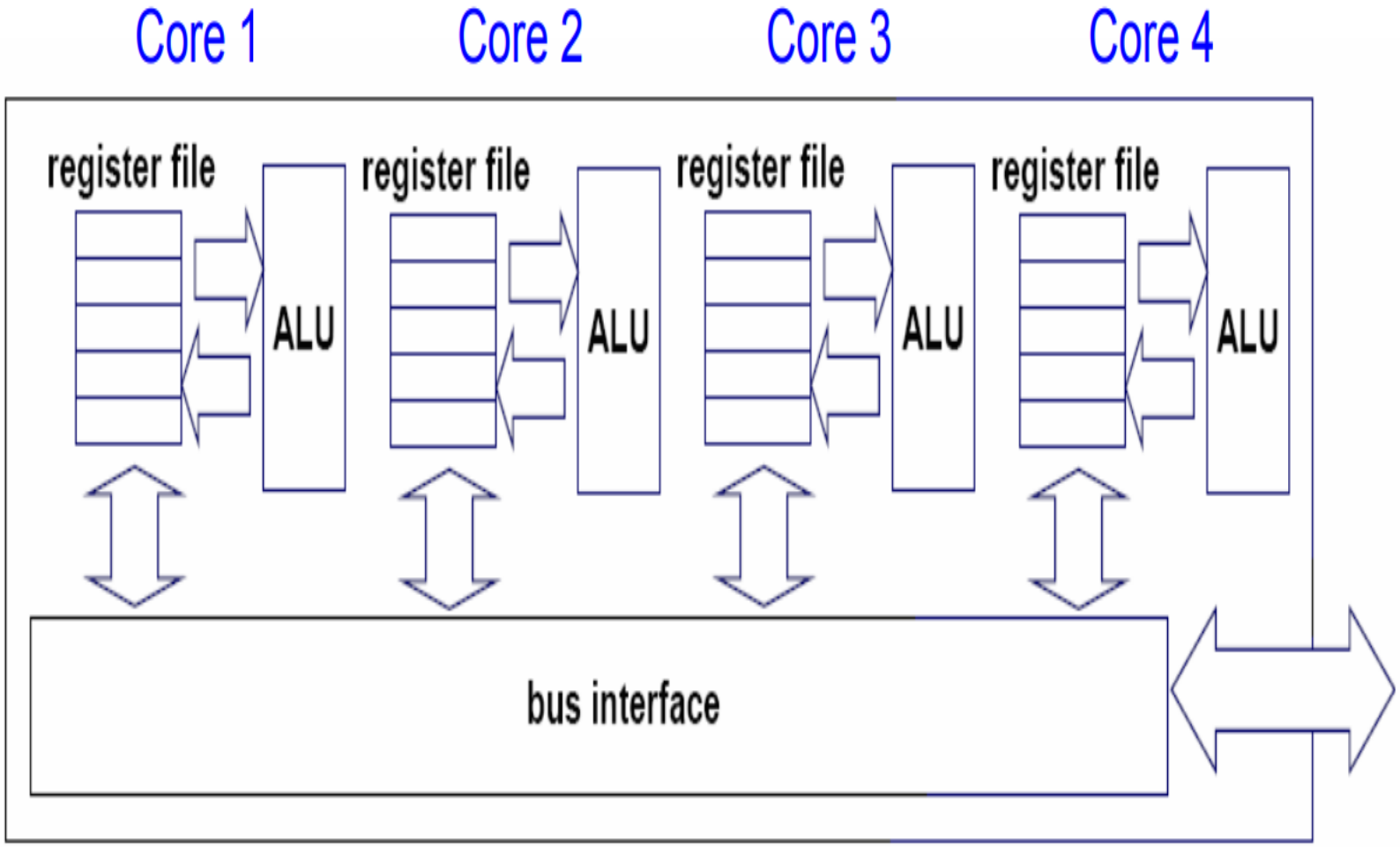

Multi-core CPU chip

Single Core Processor

- Single Core CPUs were used in the traditional type of computers. Those CPUs were able to perform one operation at once, so they were not comfortable to multi tasking system. These CPUs got degrade the entire performance of computer system while running multiple programs at same time duration.

- In Single Core CPU, FIFO (First Come First Serve) model is used, it means that couple of operations goes to CPU for processing according to priority base, and left operations get wait until first operation completed.

Dual Core Processor

- It contains two processors, and they are linked with each other like as single IC (Integrated circuit). Every processor consist its own local cache and controller, so they are able to perform different difficult operations in quickly than single core CPU.
- There are some examples which are used as dual core processors such as Intel Core Duo, the AMD X2, and the dual-core PowerPC G5.

Multi Core Processor

- It is designed with using of various processing units means “Cores” on one chip, and every core of processor is able to perform their all tasks.
- For example, if you are doing multiple activities at a same time like as using WhatsApp and playing games then one core handles WhatsApp activities and other core manage to another works such as game.

Quad Core Processor

- It is high power CPU, in which four different processors cores are combined into one processor.
- Every processor is capable to execute and process all instructions own level without taking support to other left processor cores.
- Quad core processors are able to execute massive instructions at a time without getting waiting pools.
- Quad core CPU help to enhance the processing power of computer system, but it performance depend on their using computing components.

Octa Core Processor

- Octa core processor is designed with using of multiprocessor architecture, and its design produces the higher processing speed.
- Octa core processor has best ability to perform multi tasking and to boost up efficiency of your CPU.
- These types of processors are mostly used in your smart phones.

- **Advantages Of Multi Core Processor**
- **Improved Performance**

- One of the primary advantages of multi-core processors is the ability to execute multiple tasks simultaneously, leading to improved performance. Each core in the processor can handle its own set of instructions, allowing for parallel processing. This capability enables faster execution of tasks

- **Enhanced Multitasking**
- With a multi-core processor, you can run multiple applications or tasks concurrently without significant performance degradation. Each core can be dedicated to a specific task, allowing for smoother multitasking experiences.
- **Efficient Resource Utilization**
- Multi-core processors enable better utilization of system resources

- Improved Responsiveness
- Multi-core processors can enhance the overall responsiveness of a system. For example, even while running resource-intensive tasks, other processes, such as system operations and user interactions, can be allocated to separate cores
- Scalability
- This is particularly relevant for software designed to take advantage of parallel processing, such as scientific simulations, data analysis, and rendering applications.
- Power Efficiency
- Since each core can operate at lower clock speeds when idle or performing lighter tasks, power consumption can be optimized by dynamically adjusting the core utilization based on the workload.

- **What is Coprocessor?**

  - The Co-Processor is an optional plug-in component on the motherboard.
  - The primary advantage of using this chip is the increased execution speed of program.
  - The coprocessor permits a computer to carry out certain operations much faster.
  - A coprocessor can make a computer run 5 to l0 times faster in some operation.
  - The processor works in conjunction with the co-processor when it is operating in the maximum mode.
  - Operations performed by the co-processor may be floating point arithmetic, graphics, signal processing, string processing, encryption or I/O Interfacing with peripheral devices.

- The following figure represents the architecture of the 8087 coprocessor

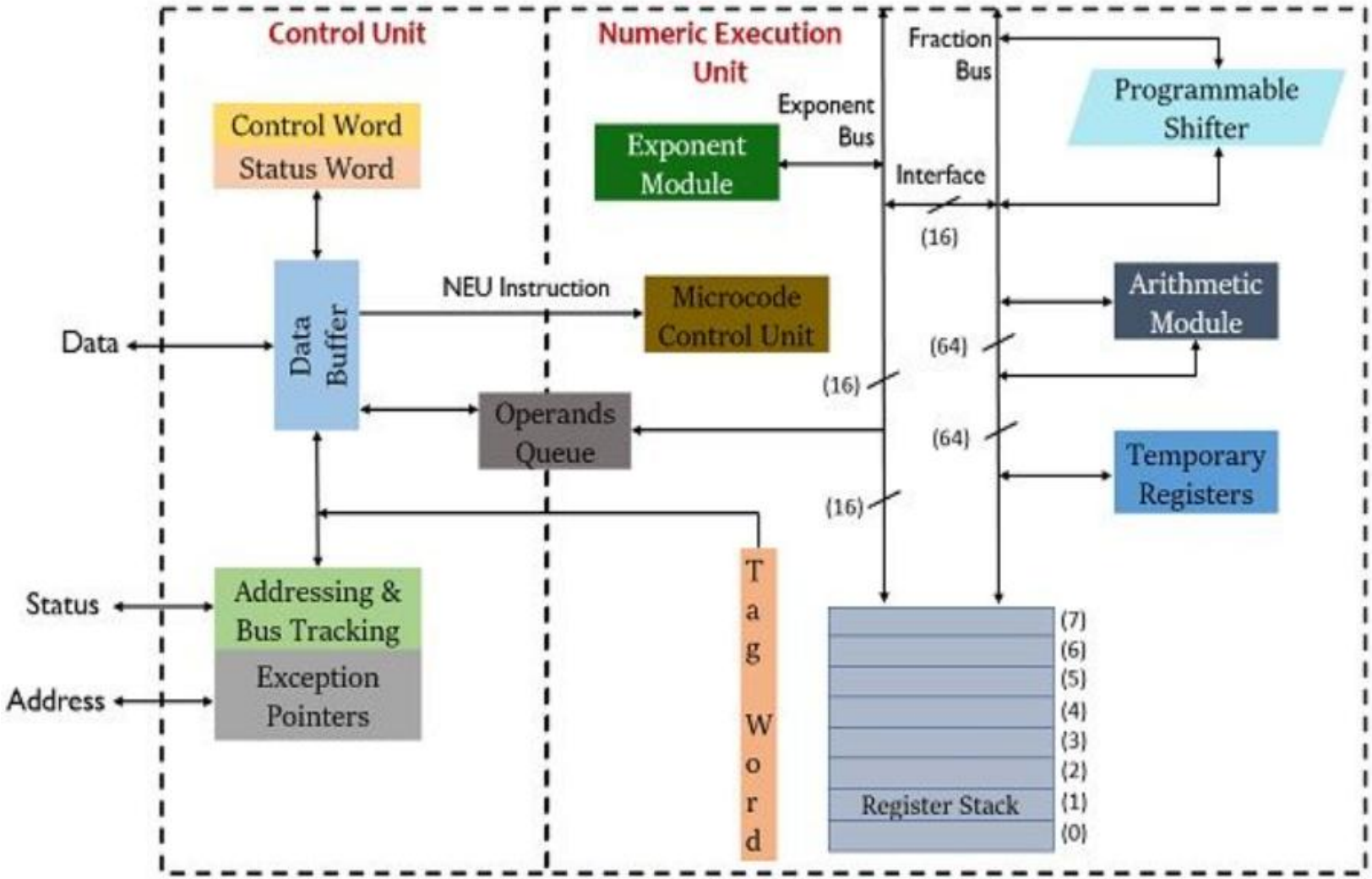

Architecture of Coprocessor Intel 8087

- The 8087 co-processor consists of
- Control Unit (CU) and
- Numeric Execution Unit (EU).
- **Control Unit (CU)** This unit is used to synchronize the operation between the main processor and co-processor.
- The control unit receives the instruction opcode, and then it decodes the instructional opcode and reads or writes operands from memory.
- The control unit provides the communication between the processor and memory, and it also coordinates the internal coprocessor execution.

- **Numeric Execution Unit (EU**) has eight data register stacks, microcode control unit and a programmable shifter.
- These units duplicate the functions performed by the microprocessor control and ALU blocks.
- The 8087 NEU and CU can work independently.
- The CU works to maintain synchronization with the main 8086/8088 processor while the NEU is performing numeric operations.

- **Types of Coprocessor**
- **Intel 8087 Coprocessor**
- Intel 8087 is a specially designed co-processor that is used to perform mathematical calculations that includes floating-point & integer values. Sometimes, it is also known as a numeric data processor & math processor.

Intel 8087 Coprocessor

- **Motorola 68881**
- Motorola 68881 is a coprocessor that is mainly used with 2nd generation of Motorola 68K microprocessor like Motorola 68030 & 68020.

Motorola 68881

- **Apple Motion Coprocessors**
- The M-series coprocessors of Apple are known as motion coprocessors which are used in Apple mobile devices.
- The M-series Apple coprocessors simply gather process & store the data of the sensor even if the device is asleep & applications can recover data once the device is again powered up. So this decreases the power drawn from the device & saves the life of the battery.

Apple Motion Coprocessors

- **The applications of coprocessors** include the following.
- The co-processor is used to perform some of the more specialized tasks such as graphical display processing or complex mathematical calculations.
- A co-processor is simply used for reducing the burden on the CPU of a computer.
- This processor works with the CPU of the computer side-by-side.
- This processor performs high-level mathematical operations much faster as compared to the main processor like roots, logarithms, trigonometry functions, etc.
- A coprocessor increases the primary processor's functions.
- The coprocessor performs different operations like signal processing, floating-point arithmetic, string processing, graphics, I/O interfacing through peripheral devices, cryptography, etc.
- These processors are stand-alone chips in earlier desktop computers that were connected to the motherboard.
- A coprocessor handles the CPU tasks for boosting overall performance.

Processor	Co-processor
Execute main program instructions	Assist Processor with specific tasks
Essential for computer operation	Optional, but enhances performance
General computing tasks	Specialized computations (e.g., graphics, Mathematics operation)
Can operate without a Coprocessor	Works alongside a Processor
Ex. Central Processing Unit (CPU)	Ex. Graphics Processing Unit (GPU)

- **BIOS & BIOS components**
- BIOS stand for Basic Input/Output system.
- The system BIOS is the lowest-level software in the computer; it acts as an interface between the hardware, especially the chipset, processor and the operating system.
- The BIOS provides access to the system hardware and enables the creation of the higher-level operating system like DOS, Windows, and Linux etc.
- BIOS identifies, configures, tests and connects computer hardware to the OS immediately after a computer is turned on. The combination of these steps is called the boot process.

- When you turn on your computer, the BIOS does several things. This is its usual sequence:
- Check the CMOS Setup for custom settings
- Load the interrupt handlers and device drivers
- Initialize registers and power management
- Perform the power-on self-test (POST)
- Display system settings
- Determine which devices are bootable
- Initiate the bootstrap sequence

- **BIOS components**
- **1) BIOS ROM :**
  - The main hardware component of the system BIOS is the system BIOS ROM itself.
  - This is normally located in an electrically-erasable read-only memory (EEPROM) chip, which allows it to be updated through software control. This process is commonly called flashing BIOS.
  - Under normal circumstances, the BIOS ROM is permanent.
- If for some reason the BIOS ROM were to become corrupted for example, you might find your PC left in a state where it could not be booted. In this situation. you might have to physically replace the BIOS ROM. but this is a very rare happening

- **2) BIOS CMOS Memory:**
  - CMOS stands for "Complementary Metal Oxide Semiconductor". This is one type of technology, used to make semiconductors (integrated circuits) such as processors, chipset chips, DRAM, etc.
  - CMOS has the advantage of requiring very little power compared to some other semiconductor technologies.
  - This is why it was chosen for this use.
  - So that the amount of power required from the battery would be minimal. and the battery would be able to last a long time.
  - The BIOS settings must be saved in non-volatile memory so that they are preserved even when the machine power is off.
  - A special type of memory is used to store this information called CMOS memory. and a very small battery is used to trickle a small charge to it to make sure that the data it holds is always preserved.
  - These memories are very small typically 64 bytes.
  - This non-volatile memory is sometimes called NVRAM (Non Volatile RAM).
- The most of motherboard allow to clear the CMOS memory when require, when this is helps someone set the CMOS setup password and forgot it.

- **Functions of BIOS**
- **1) Power-On Self-Test (POST)**: During the boot process, the BIOS performs a series of tests on the hardware components, such as the CPU, memory, and storage devices, to check if they are functioning properly. If any issues are detected, the BIOS may display error messages or emit beep codes to alert the user.
- **2) System Configuration**: The BIOS allows users to configure various system settings, such as the boot order of devices, date and time, and hardware parameters. These settings can be accessed and modified through the BIOS setup utility, which is typically accessed by pressing a specific key during the boot process, such as F2 or Del.

- **3) Device Initialization**: The BIOS initializes all the hardware components of the computer, including the CPU, memory, storage devices, and peripheral devices, such as keyboard and mouse. It provides the necessary instructions for these devices to start functioning and communicate with the operating system.

- **4) Boot Loader**: The BIOS contains a boot loader, which is a small program that loads the operating system into memory and starts its execution. The boot loader reads the boot sector of the storage device, which contains the initial instructions for the operating system to start loading.

- **5) Firmware Updates**: The BIOS can be updated with new firmware to fix bugs, improve compatibility, and add new features. Firmware updates are typically provided by the motherboard manufacturer and can be installed using a utility provided by the manufacturer.

- The BIOS has 4 main functions:
- **POST -** Test computer hardware insuring hardware is properly functioning before starting process of loading Operating System.
- **Bootstrap Loader -** Process of locating the operating system. If capable Operating system located BIOS will pass the control to it.
- **BIOS -** Software / Drivers which interfaces between the operating system and your hardware. When running DOS or Windows you are using complete BIOS support.
- **CMOS Setup -** Configuration program. Which allows you to configure hardware settings including system settings such as computer passwords, time, and date.
-

Different types of BIOS

- **Traditional BIOS**: Refers to the original BIOS developed by IBM, which used a simple set of instructions stored in a ROM chip and was commonly used in older computer systems.

- **UEFI (Unified Extensible Firmware Interface) and EFI (Extensible Firmware Interface)**: Refers to modern BIOS types that offer advanced features, such as larger storage support, faster boot times, graphical user interfaces (GUI), and improved security.

Below is a table which summarizes the key differences between BIOS and UEFI:

Feature	BIOS	UEFI
Architecture	16-bit	32-bit or 64-bit
Storage	ROM chip	Flash memory chip
Bootable drive size limit	2.2TB	9 zettabytes
User interface	Text-based	Graphical
Security features	None	Secure Boot
Boot time	Slow	Fast
Flexibility	Limited	More flexible

- **BIOS Startup Screen**
- When the system BI0S starts up, you will see its familiar screen display, normally after the video adapter displays its information. These are the contents of a typical BIOS start up screen:
  - The BIOS Manufacturer and Version Number.
  - **The BIOS Date:** The date of the BIOS can be important in helping you determine its capabilities.
  - **Setup Program Key:** The key or keys to press to enter the BIOS setup program. (This is usually {Del}, sometimes {F2}, and sometimes another key combination.
  - **System Logo:** The logo of the BIOS Company or in some cases the PC maker or motherboard manufacturer.
- **The BIOS Serial Number:** This is normally located at the bottom of the screen. Since BIOSes are highly customized to the particular motherboard, this serial number can be used in many cases to determine the specific motherboard, this serial number can be used in many cases to determine the specific motherboard and BIOS version you are using.