GEAR DATA	VALUE
MODULE	2
PITCH DIAMETER	80
NUMBER OF TEETH	40
PRESSURE ANGLE	20°
OUTSIDE DIAMETER	84
ROOT DIAMETER	75
FACE WIDTH	15
BORE DIAMETER	20

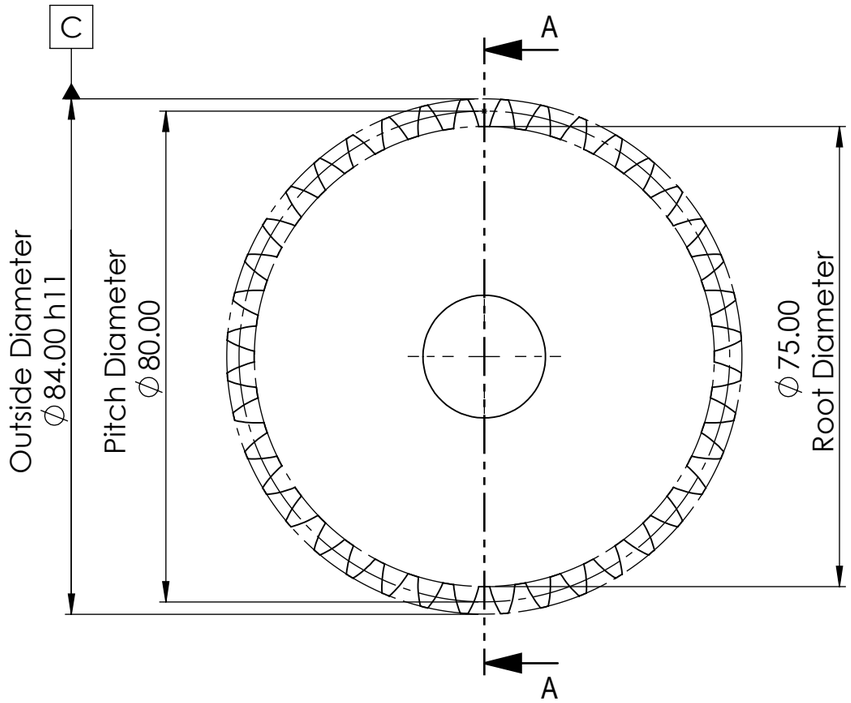

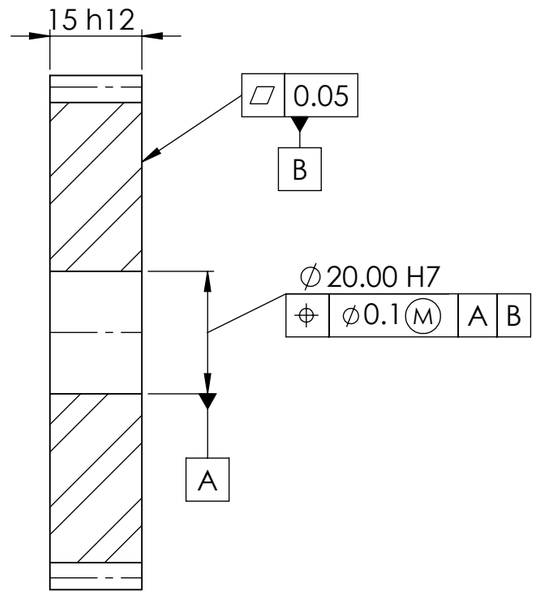

SECTION A-A

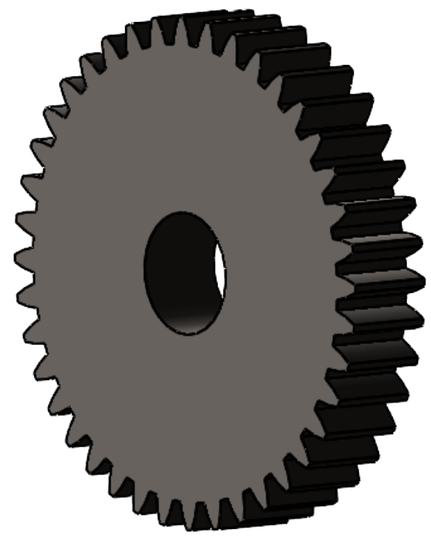

1. STANDARD: ISO
2. MODULE: 2
3. NUMBER OF TEETH: 40
4. PRESSURE ANGLE: 20°
5. MATERIAL: AISI 1045 (Plain Carbon Steel)
6. GENERAL TOLERANCE (ISO 2768-mK):
   - Linear dimensions: ±0.2 mm
   - Angular dimensions: ±0.5°
7. ALL DIMENSIONS ARE IN MILLIMETERS (mm)
8. REMOVE ALL SHARP EDGES AND BURRS
9. SURFACE FINISH: Ra 1.6 (for gear teeth)

UNLESS OTHERWISE SPECIFIED:
DIMENSIONS ARE IN MILLIMETERS[mm]
SURFACE FINISH:
TOLERANCES:
LINEAR:
ANGULAR:

FINISH:

REMOVE ALL BURRS

DO NOT SCALE DRAWING

Design of a 2:1 Spur Gear Drive

REV.	NAME	DES.	DATE
A	PARSA.HM	Initial Release	8/19/2026
B	PARSA.HM	Updated Dimensions	8/19/2026

TITLE: Spur_Gear_40T_ISO

MATERIAL: AISI 1045 Steel, cold drawn

DWG NO. SG-001

A3

WEIGHT: 545.609

SCALE:1:1

SHEET 1 OF 3

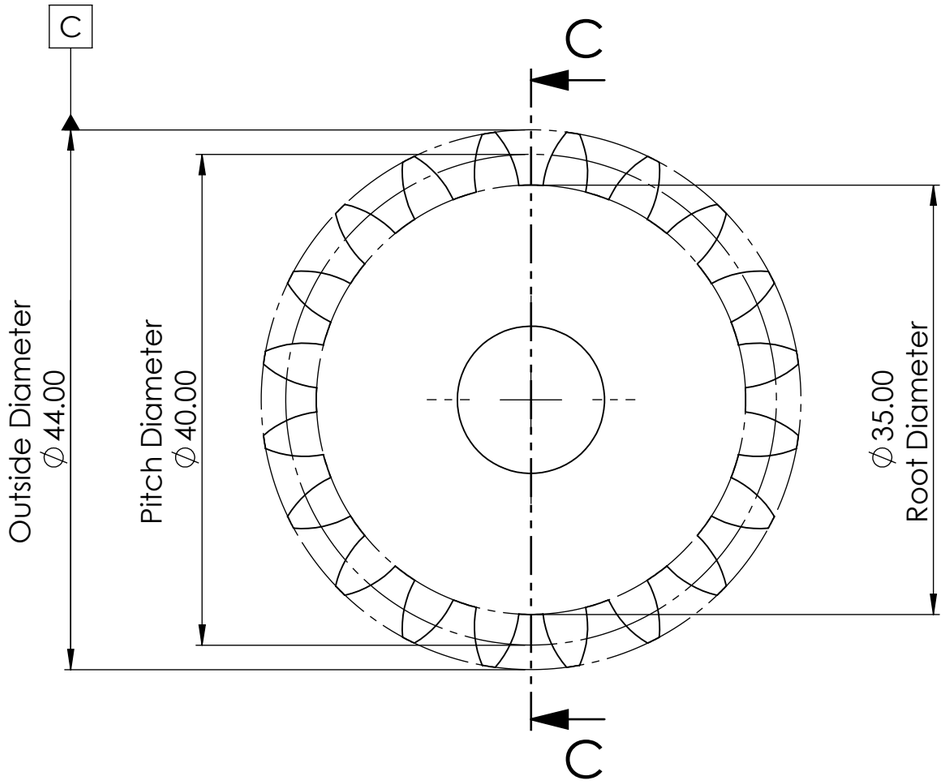

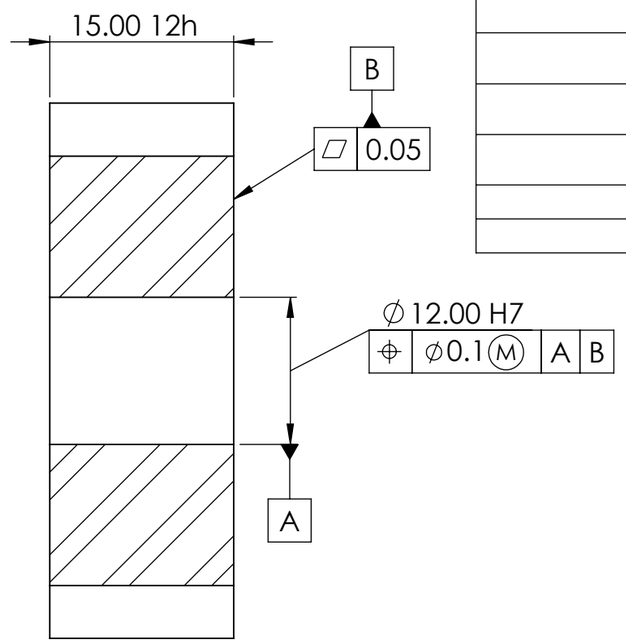

SECTION C-C

GEAR DATA	VALUE
MODULE	2
NUMBER OF TEETH	20
PITCH DIAMETER	40
OUTSIDE DIAMETER	44
ROOT DIAMETER	35
PRESSURE ANGLE	20°
BORE DIAMETER	12
FACE WIDTH	15

1. STANDARD: ISO
2. MODULE: 2
3. NUMBER OF TEETH: 20
4. PRESSURE ANGLE: 20°
5. MATERIAL: AISI 1045 (Plain Carbon Steel)
6. GENERAL TOLERANCE (ISO 2768-mK):
   - Linear dimensions: ±0.2 mm
   - Angular dimensions: ±0.5°
7. ALL DIMENSIONS ARE IN MILLIMETERS (mm)
8. REMOVE ALL SHARP EDGES AND BURRS
9. SURFACE FINISH: Ra 1.6 (for gear teeth)

UNLESS OTHERWISE SPECIFIED:
DIMENSIONS ARE IN MILLIMETERS[mm]
SURFACE FINISH:
TOLERANCES:
LINEAR:
ANGULAR:

FINISH:

REMOVE ALL BURRS

DO NOT SCALE DRAWING

REV.	NAME	DES.	DATE
A	PARSA.HM	Initial Release	8/19/2026
B	PARSA.HM	Updated Dimensions	8/19/2026

MATERIAL: AISI 1045 Steel, cold drawn

WEIGHT: 129.617 grams

Design of a 2:1 Spur Gear Drive

TITLE: Spur_Gear_20T_ISO

DWG NO. SG-002

A3

SCALE:2:1

SHEET 2 OF 3

ITEM NO.	PART NUMBER	QTY.
1	SUPER GEAR 40T	1
2	SUPER GEAR 20T	1

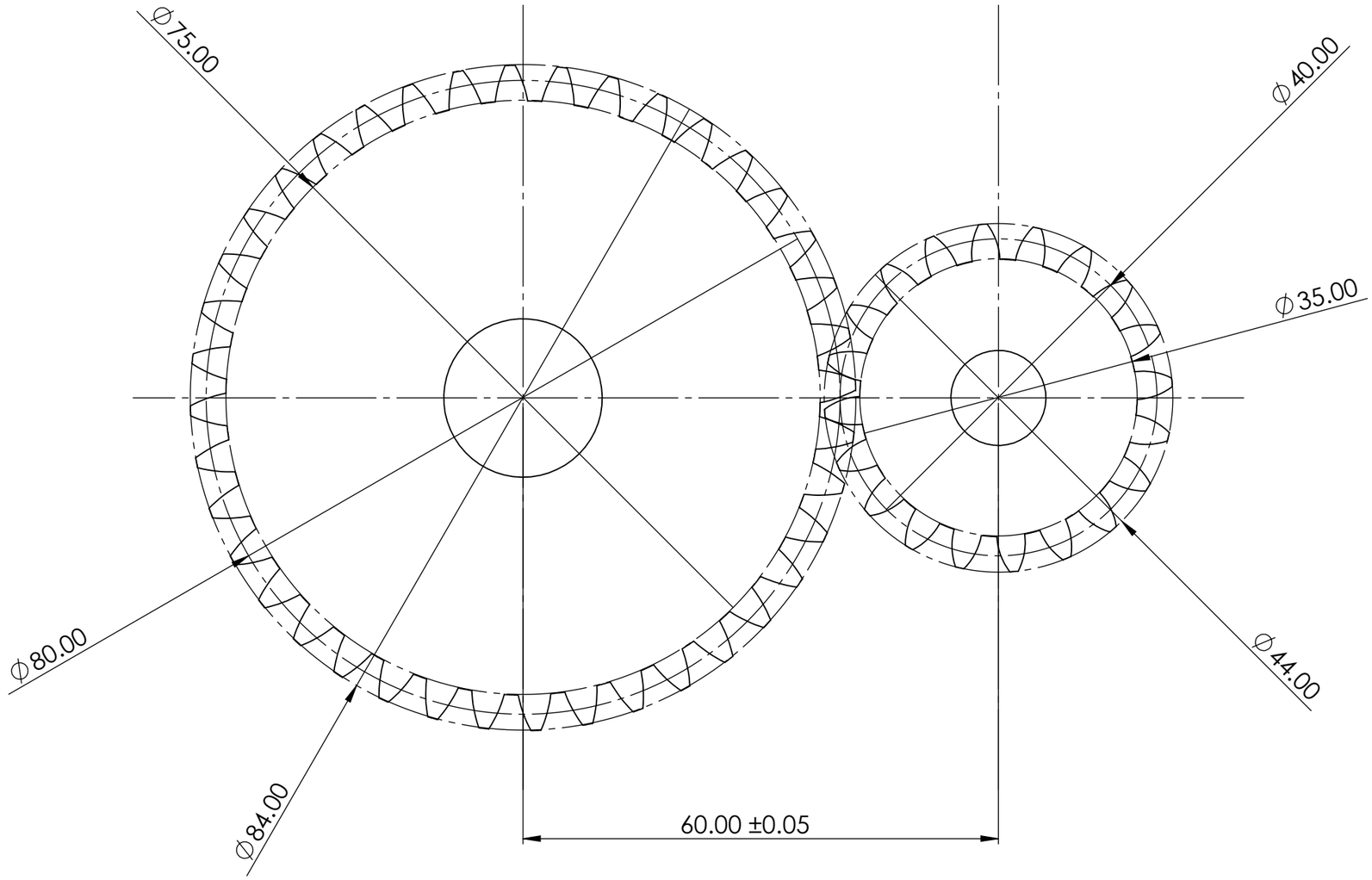

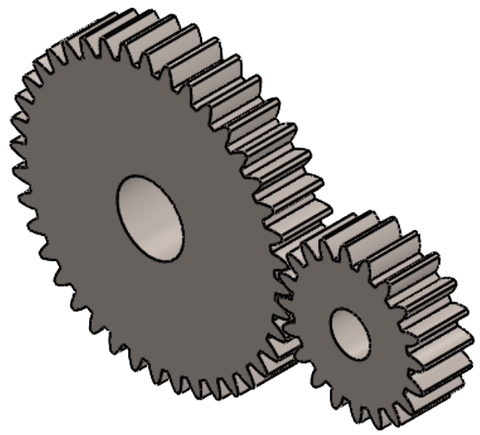

GEAR RATIO: 2:1 (20T : 40T)

CENTER DISTANCE: 60 mm

STANDARD: ISO

LUBRICATION: Grease (General Purpose)

BACKLASH: 0.1 mm (Max)

UNLESS OTHERWISE SPECIFIED:
DIMENSIONS ARE IN MILLIMETERS[mm]
SURFACE FINISH:
TOLERANCES:
LINEAR:
ANGULAR:

FINISH:

REMOVE ALL BURRS

DO NOT SCALE DRAWING

Design of a 2:1 Spur Gear Drive

REV.	NAME	DES.	DATE
A	PARSA.HM	Initial Release	8/19/2026
B	PARSA.HM	Updated Dimensions	8/19/2026

TITLE: FINAL ASSEMBLY

MATERIAL:

WEIGHT:

DWG NO. FA-001

A3

SCALE:1:1

SHEET 3 OF 3