SL NO	Revision	Comment	Approval Date	Authorized
A	REMOVE NOTES BLOCK	DO NOT NEED FINISH, MATERIALS ETC.	11/11/2025	
B	MODIFYING PARTS LIST	START FROM THE BOTTOM	11/11/2025	
C	USING NAME IDENTIFIERS	NO NUMBER IDENTIFIERS	11/11/2025	

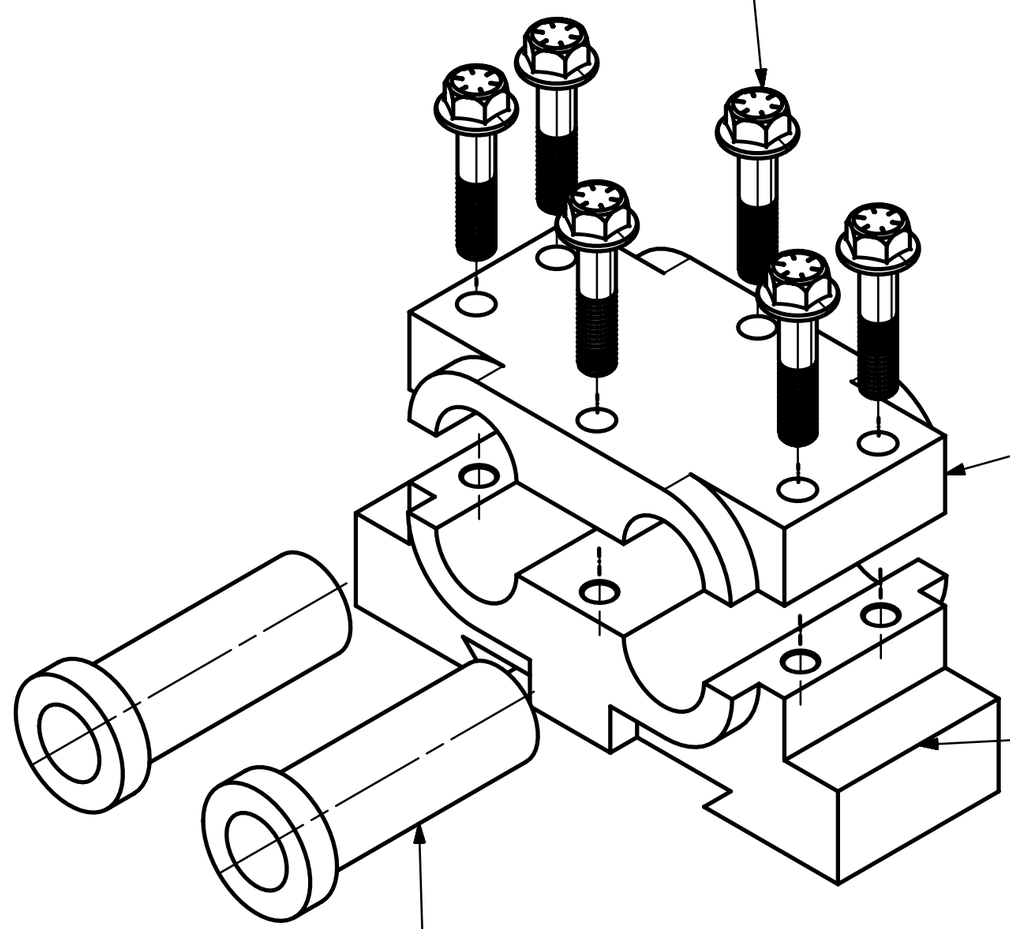

PC NO	PART NAME	QTY	DESCRIPTION
4	[HEX FLANGED BOLTS]	6	[0.5-13UNC X 2.00]
3	[BUSHING]	2	[BRONZE]
2	[BASE]	1	[STEEL]
1	[CAP]	1	[STEEL]

ALL DIMENSIONS IN INCHES

THIS DRAWING HAS BEEN PRODUCED USING AN EXAMPLE TEMPLATE PROVIDED BY SIEMENS PLM SOFTWARE

FIRST ISSUED	10/20/2025
DRAWN BY	PD
CHECKED BY	AB
APPROVED BY	Ashulesh Barman

TITLE

DOUBLE BEARING

SIZE	DRG NO.	SHEET REV
B	assembly	A

SCALE 1:2 | SHEET 1 OF 2

SL NO	Revision	Comments	Approval Date	Authorized
A	REMOVE REFERENCE FRAME	UNNECESSARY B FRAME	11/11/2025	
B	CYLINDRICITY	NO DATUM NEEDED	11/11/2025	
C	ADD AXIS PERPENDICULARITY	NEED GD&T ON AXIS	11/11/2025	
D	REMOVE PARALLELISM	DO NOT NEED IT	11/11/2025	

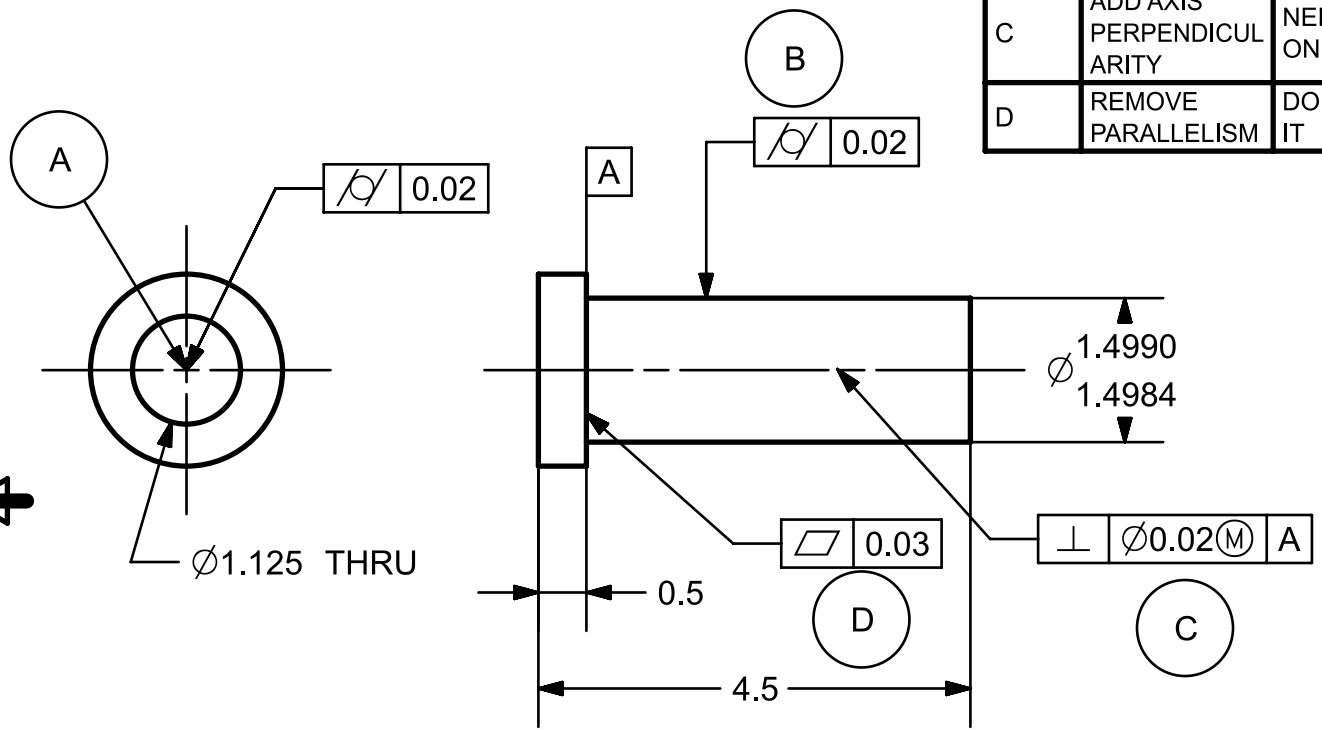

NOTES:
MATERIAL: STEEL
FINISH: 125 μ in

GENERAL TOLERANCE:
X° ± 2°
X.X ± 0.1
X.XX ± 0.03
X.XXX ± 0.005
UNLESS SPECIFIED

ALL DIMENSIONS IN INCHES

FIRST ISSUED	10/28/2025
DRAWN BY	PD
CHECKED BY	AB
APPROVED BY	Ashutosh Barman

TITLE

BUSHING

SIZE	DRG NO.	SHEET REV
A	BUSHING_HW8	A

SCALE 1:2 | SHEET 1 OF 1

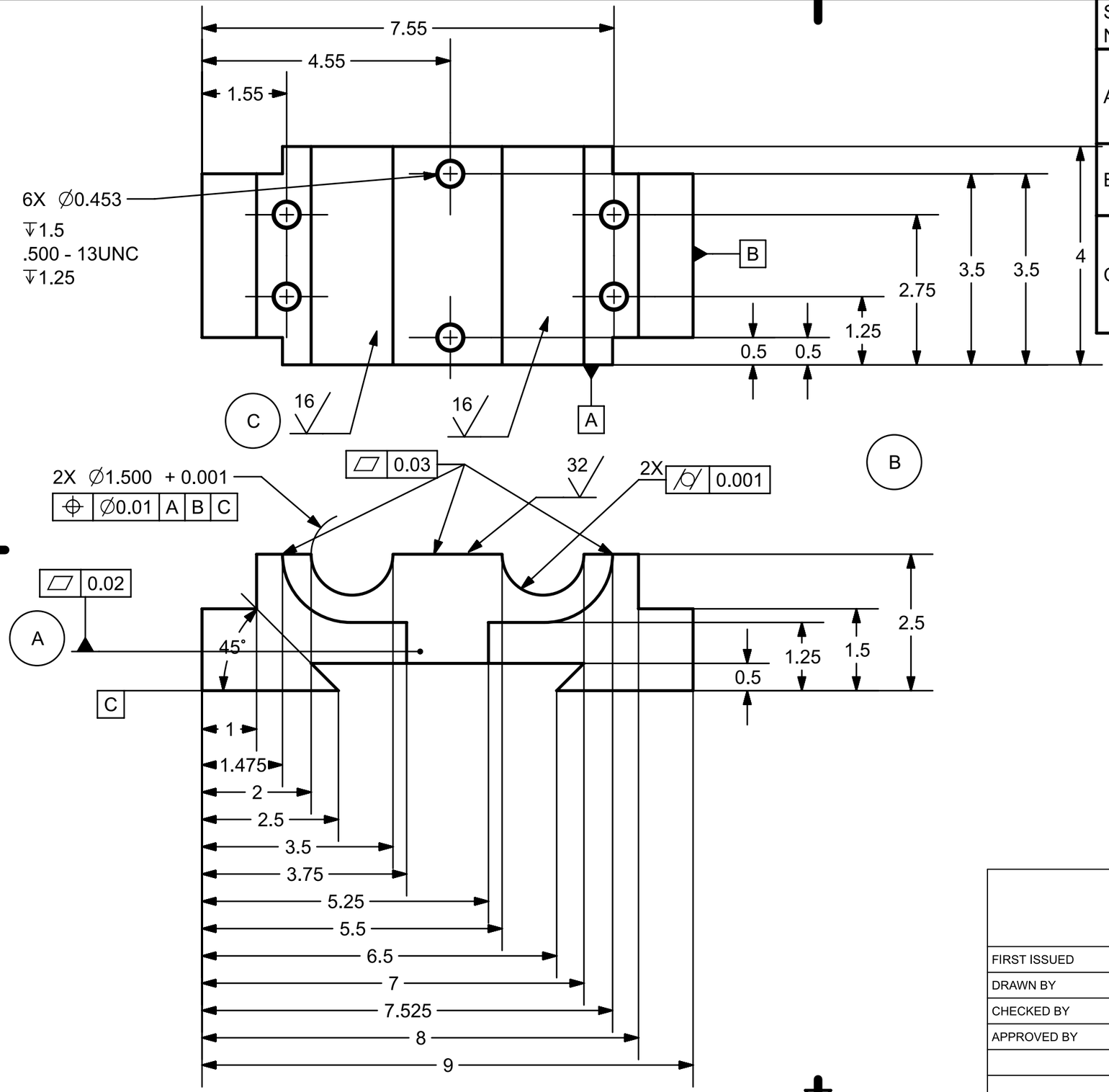

SL NO	Revision	Comment	Approval Date	Authorized
A	ADD FLATNESS TO FRONT SURFACE		11/11/2025	
B	ADD POSITION FCS	NEEDED FOR BUSHING HOLE	11/11/2025	
C	ADD FINISH	FINISH NEEDED FOR OTHER BUSHING HOLE	11/11/2025	

NOTES:
MATERIAL: STEEL
FINISH: 125 μ in

GENERAL TOLERANCE:
X° ± 2°
X.X ± 0.1
X.XX ± 0.03
X.XXX ± 0.005

UNLESS SPECIFIED

ALL DIMENSIONS IN INCHES

FIRST ISSUED	10/30/2025
DRAWN BY	PD
CHECKED BY	AB
APPROVED BY	Ashulesh Barman

TITLE

BASE

SIZE	DRG NO.	SHEET REV
B	BASE_HW8	A

SCALE 1:2 | SHEET 1 OF 1

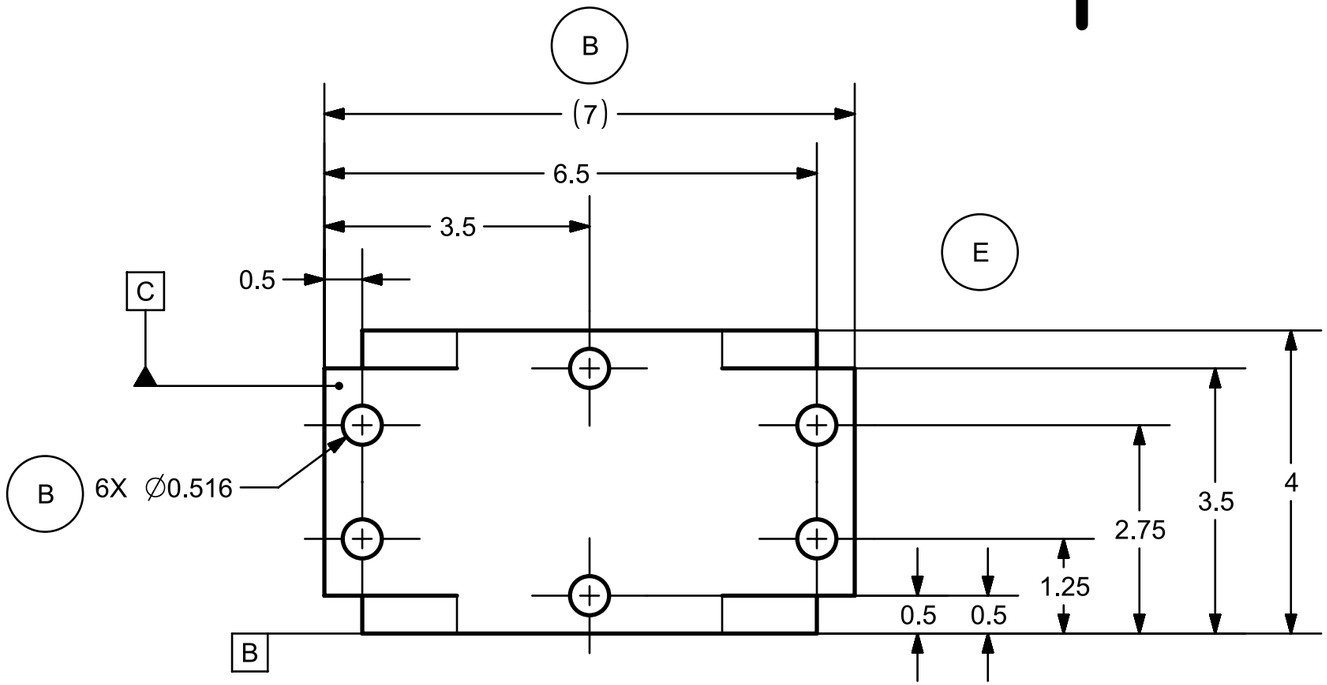

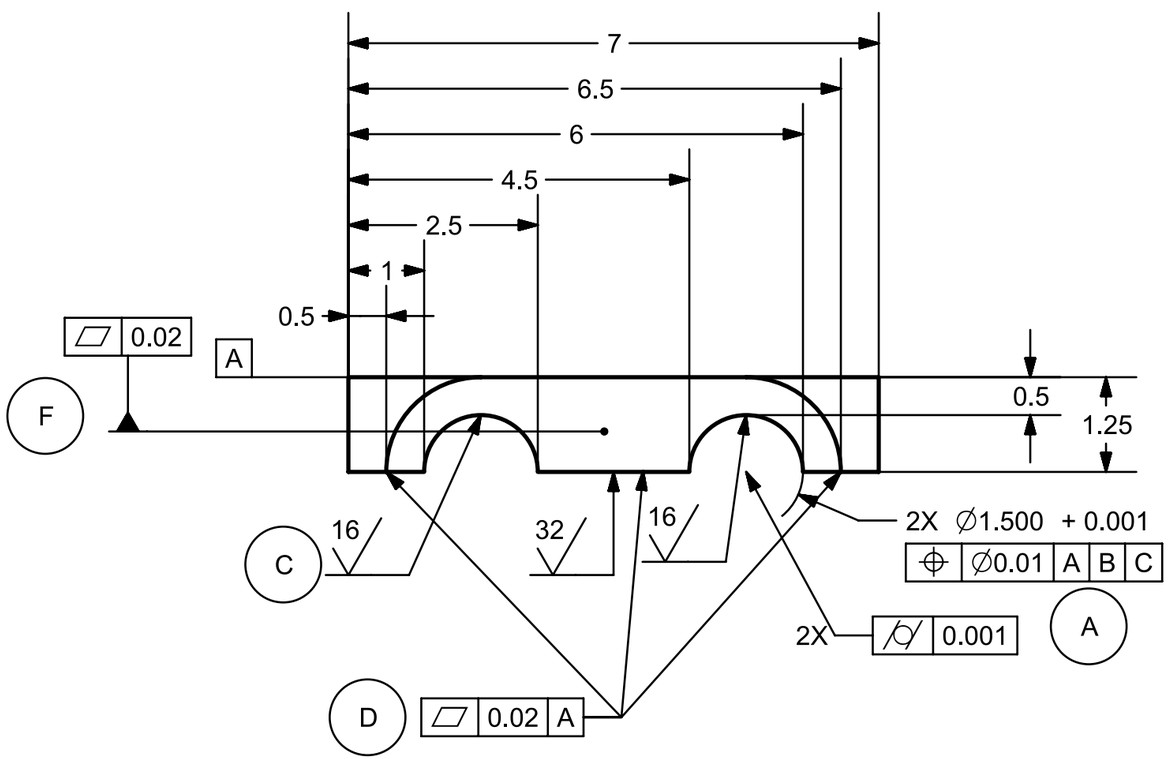

SL NO	Revision	Comments	Approval Date	Authorized
A	CORRECT POSITION FCS	ON BUSHING	11/11/2025	
B	ADD DIMENSIONS		11/11/2025	
C	ADD FINISH	BOTH BUSHING HOLES	11/11/2025	
D	FLATNESS FCS	ADD ON BOTTOM FACE	11/11/2025	
E	UNNECESSARY CONTROL FRAMES	FRAMES ON BOLT HOLES	11/13/2025	
F	FLATNESS TO FRONT SURFACE		11/14/2025	

NOTES:
MATERIAL: STEEL
FINISH: 125 μ in

GENERAL TOLERANCE:
X˚ ± 2˚
X.X ± 0.1
X.XX ± 0.03
X.XXX ± 0.005

UNLESS SPECIFIED

ALL DIMENSIONS IN INCHES

FIRST ISSUED	10/30/2025
DRAWN BY	PD
CHECKED BY	AB
APPROVED BY	Ashutosh Barman

TITLE

CAP

SIZE	DRG NO.	SHEET REV
B	CAP_HW8	A

SCALE1:2 | SHEET 1 OF 1