SL NO	REVISION	COMMENTS	DATE	AUTHORIZED

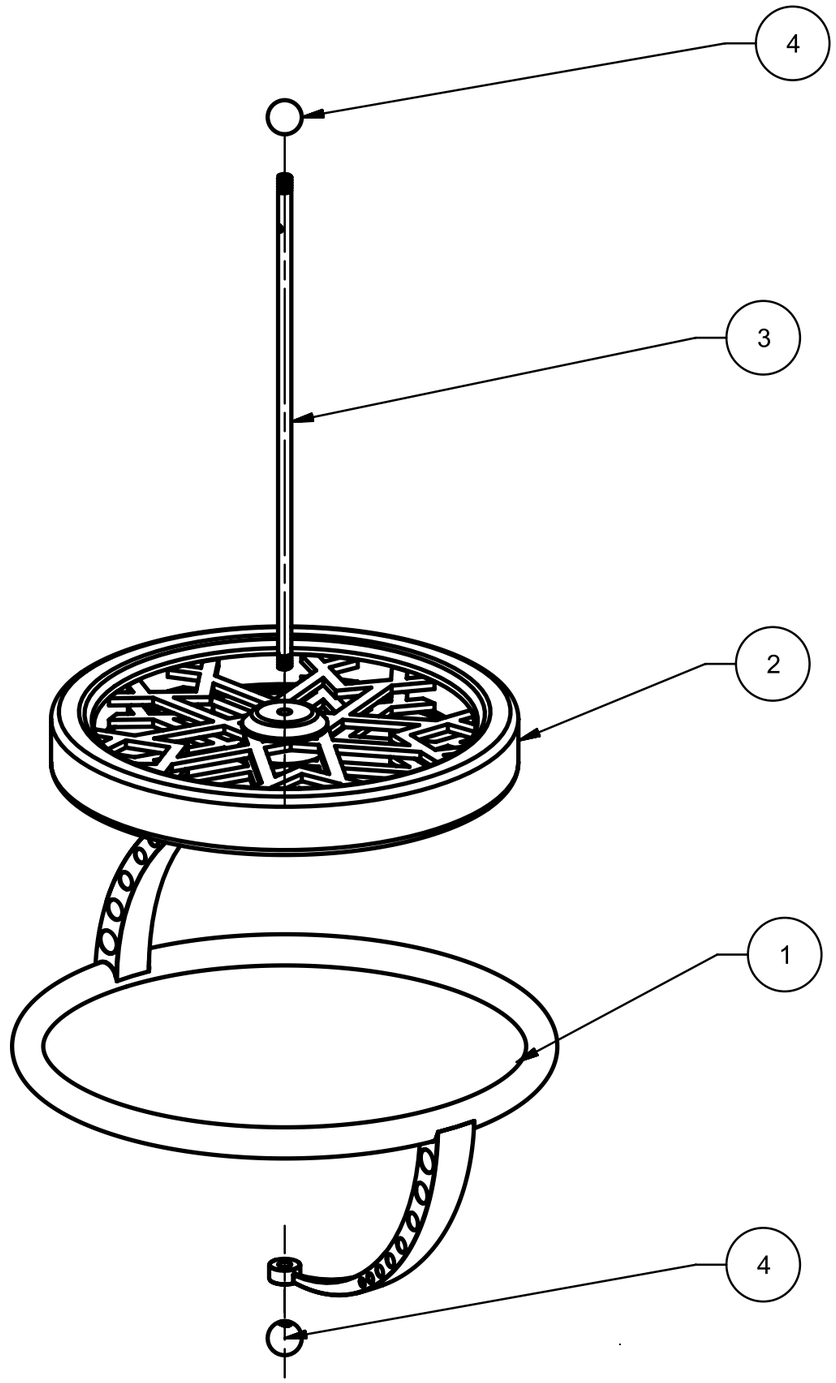

PC NO	PART NAME	QTY
4	GYROSCOPE TIP	2
3	GYROSCOPE ROD	1
2	GYRO_ROTOR	1
1	HOUSING	1

ALL DIMENSIONS IN INCHES

FIRST ISSUED	11/14/2025
DRAWN BY	PD
CHECKED BY	DS
APPROVED BY	Danid Skomorovsky

TITLE

GYROSCOPE

SIZE	DRG NO.	SHEET REV
B	Gyroscope_assembly	A

SCALE 1:1 | SHEET 2 OF 2 | A3

SL NO	REVISION	COMMENTS	DATE	AUTHORIZED

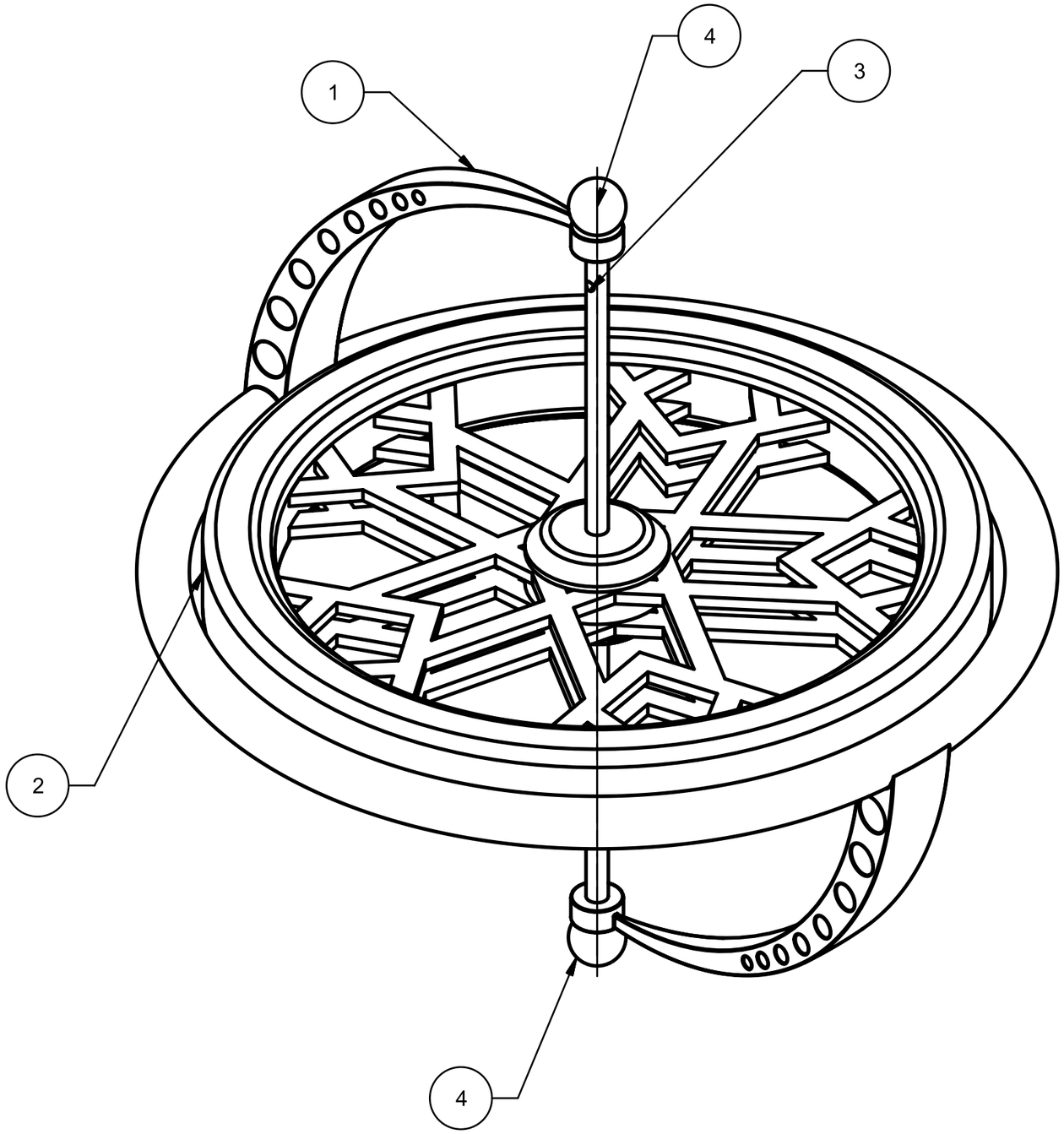

PC NO	PART NAME	QTY
4	GYROSCOPE TIP	2
3	GYROSCOPE ROD	1
2	GYRO_ROTOR	1
1	HOUSING	1

ALL DIMENSIONS IN INCHES

FIRST ISSUED	11/14/2025
DRAWN BY	PD
CHECKED BY	DS
APPROVED BY	Danid Tkomorovsky

TITLE

GYROSCOPE

SIZE	DRG NO.	SHEET REV
B	Gyroscope_assembly	A

SCALE 2:1 | SHEET 1 OF 2 | A3