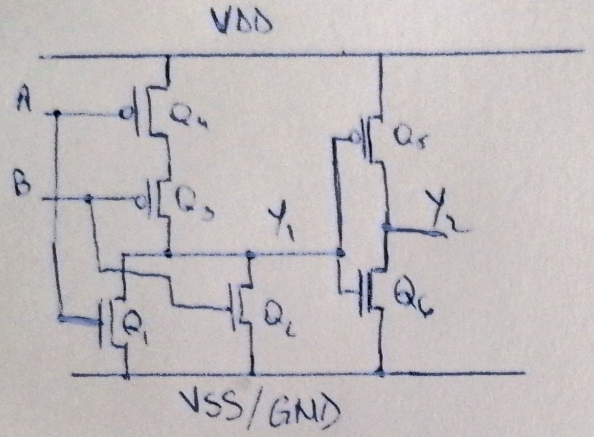

A	B	Y_2	Y_1
0	0	0	1
0	1	1	0
1	0	1	0
1	1	1	0
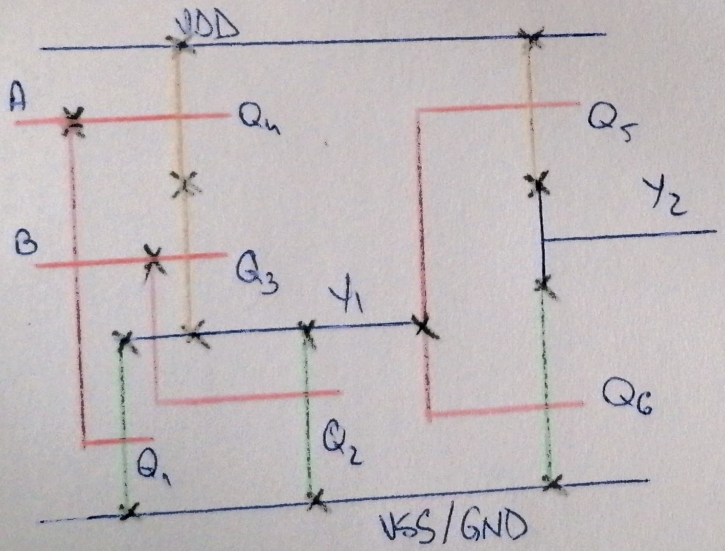
STICK DIAGRAM