ANGULARITY	CONCENTRICITY	FLATNESS	PERPENDICULARITY	STRAIGHTNESS	CIRCULAR RUN OUT	PROFILE OF ANY SURFACE	REGARDLESS OF FEATURE SIZE	LEAST MATERIAL CONDITION	PROJECT TOLERANCE ZONE	TANGENT PLANE		200Z		50Z		12.5Z		G	1.6Z		0.4Z	0.2Z	0.1Z	LP
CIRCULARITY	CYLINDRICITY	PARALLELISM	POSITION	SYMMETRY	TOTAL RUN OUT	PROFILE OF ANY LINE	FREE STATE	MAXIMUM MATERIAL CONDITION	ENCOMPASSING		400Z	200Z	100Z	50Z	25Z	12.5Z	6.3Z	3.2Z	1.6Z	0.8Z	0.4Z	0.2Z	0.1Z	0.05Z

SYM	REVISON RECORD	ISSUE NO.	DATE	NAME

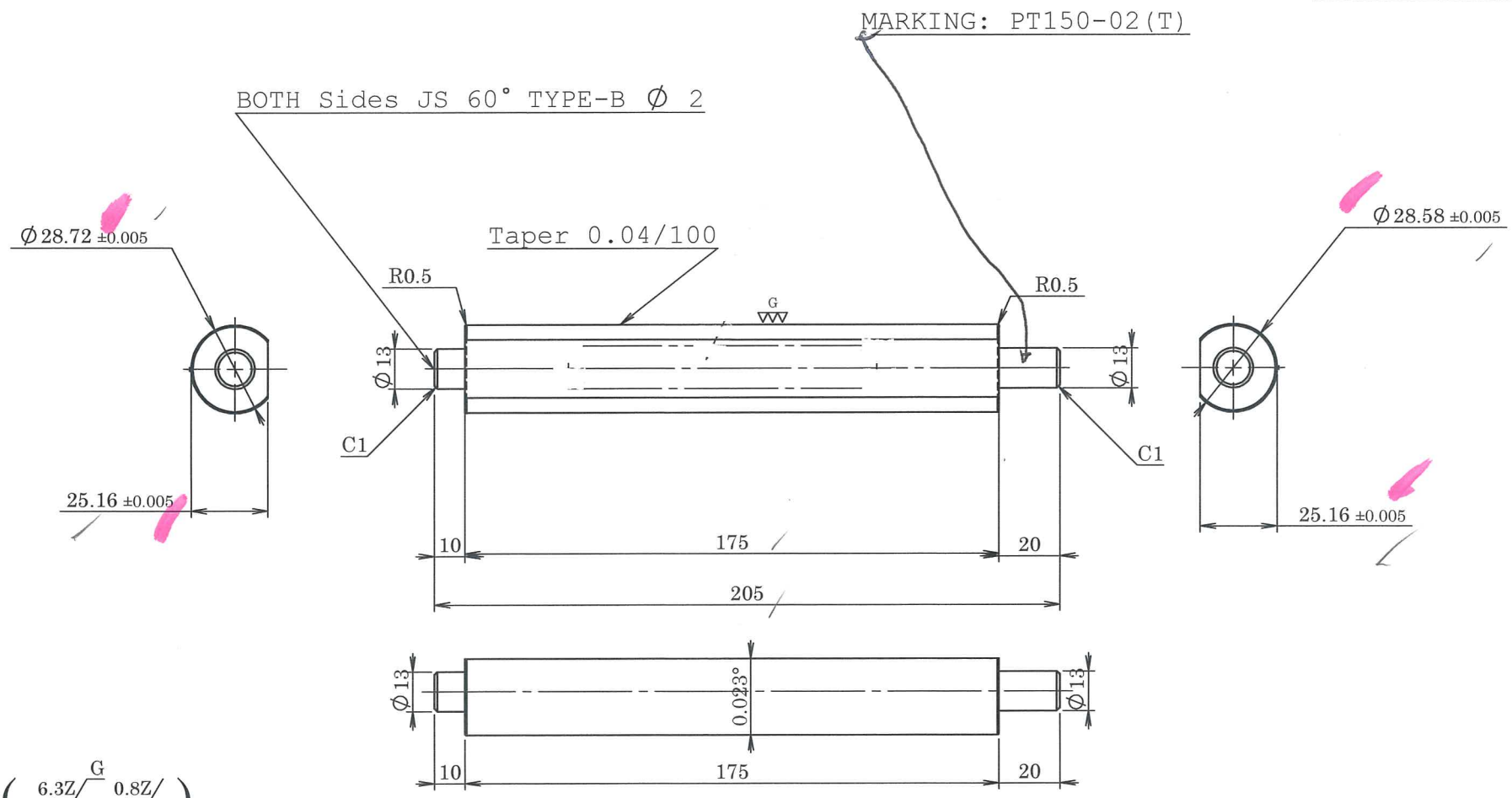

50Z (6.3Z G , 0.8Z)

0
1

GENERAL TOLERANCE GRADE (YES 052502-05-GRADE 1)					
GENERAL AREA	X≤50	50<X≤100	100<X≤200	200<X≤400	400<X≤800
	±0.1	±0.15	±0.2	±0.3	±0.4
GENERAL DISTANCE	X<100	100<X≤200	200<X≤500	CHAMFERING UNLESS OTHERWISE SPECIFED SHALL BE C0.5	
	±0.12	±0.15	±0.2		
GENERAL ANGLE	±1°30'				

@ LINE
OBOM GAUGE

1:1	OGURA	Tapered Mandrel Ø 28.72 Ø 28.58	-	-	-
SCALE	CUSTOMER	PART NAME	PART NO.	JOB NO.	DWG. NO.

OBOM GAUGE TECHNOLOGY
1/2 Moo.3 T.Krachaeng A.Samkhok Pathumthani 12160
Head Office Tel : 0-2593-1389 Fax : 0-2593-1390 Mobile : 089-8974-096 / 062-594-7849

DESIGN	Patchara P.	28/06/21
CHECK		
APPROVED		

OPERATION TO MACHINE	MATERIAL	SURFACE FINISH	SURFACE TREATMENT	THIRD ANGLE	SHEET NO.	
-	S45C	58-63 HRC. SS	BLACKENING		1	A4

FM-DS-01 Rev. 00