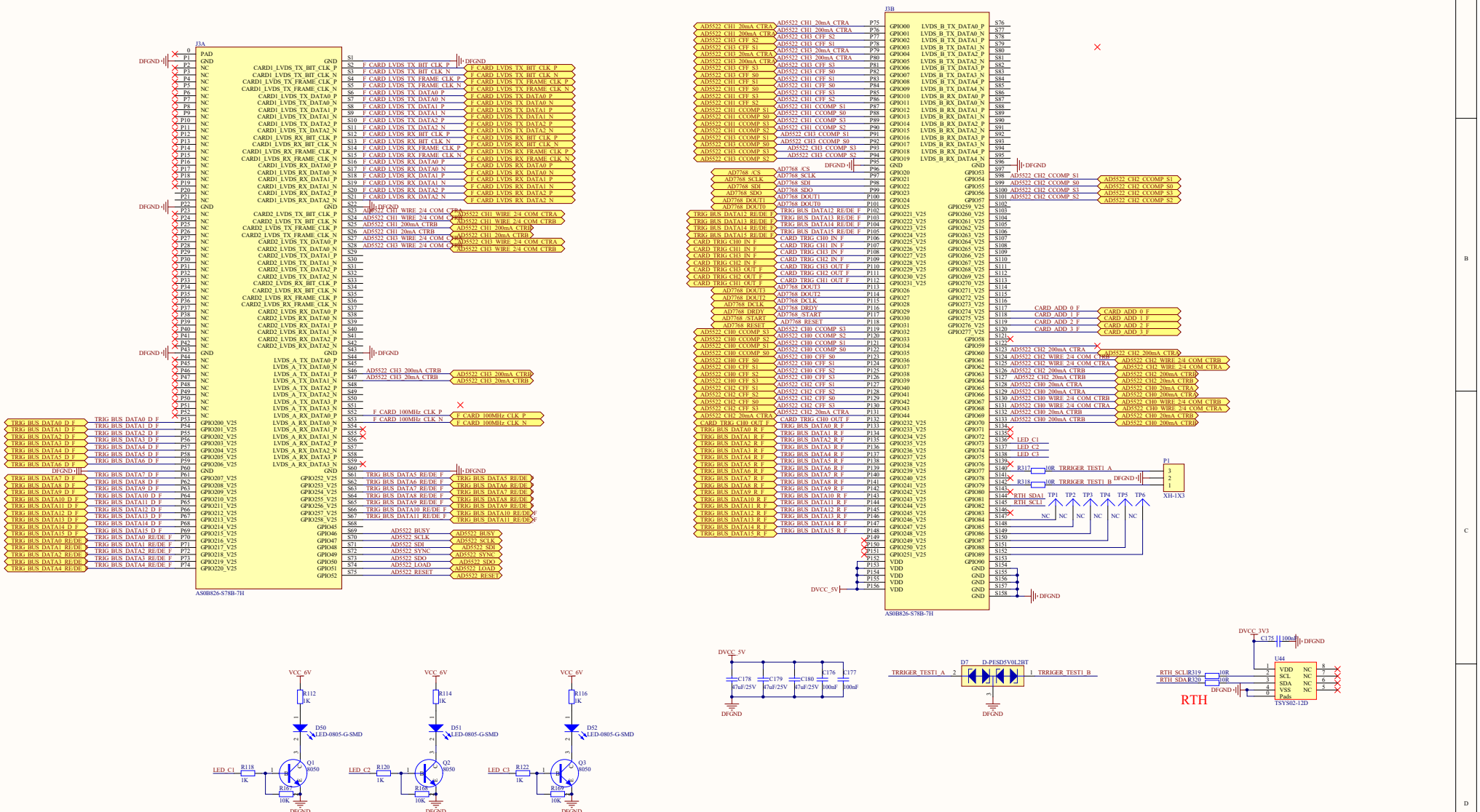

Title		
Size A2	Number	Revision
Date: 2021/1/25		Sheet of
File: F:\YMC\..\10 FPGA_MODULE.SchDoc		Drawn By:

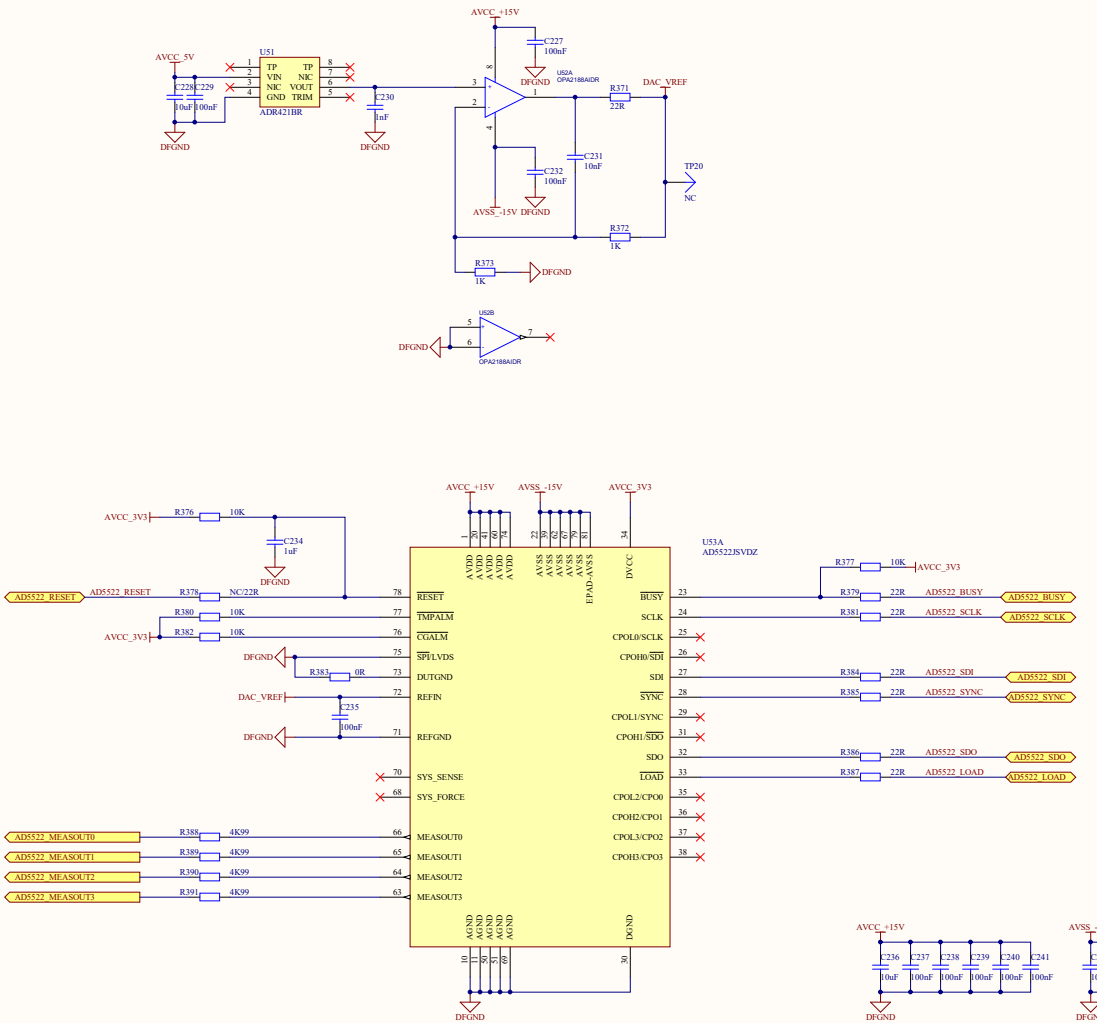

Title		
Size C	Number	Revision
Date: 2021/1/25		Sheet of
File: F:\YMC\..\13 AD5522_POWER.SchDoc		Drawn By:

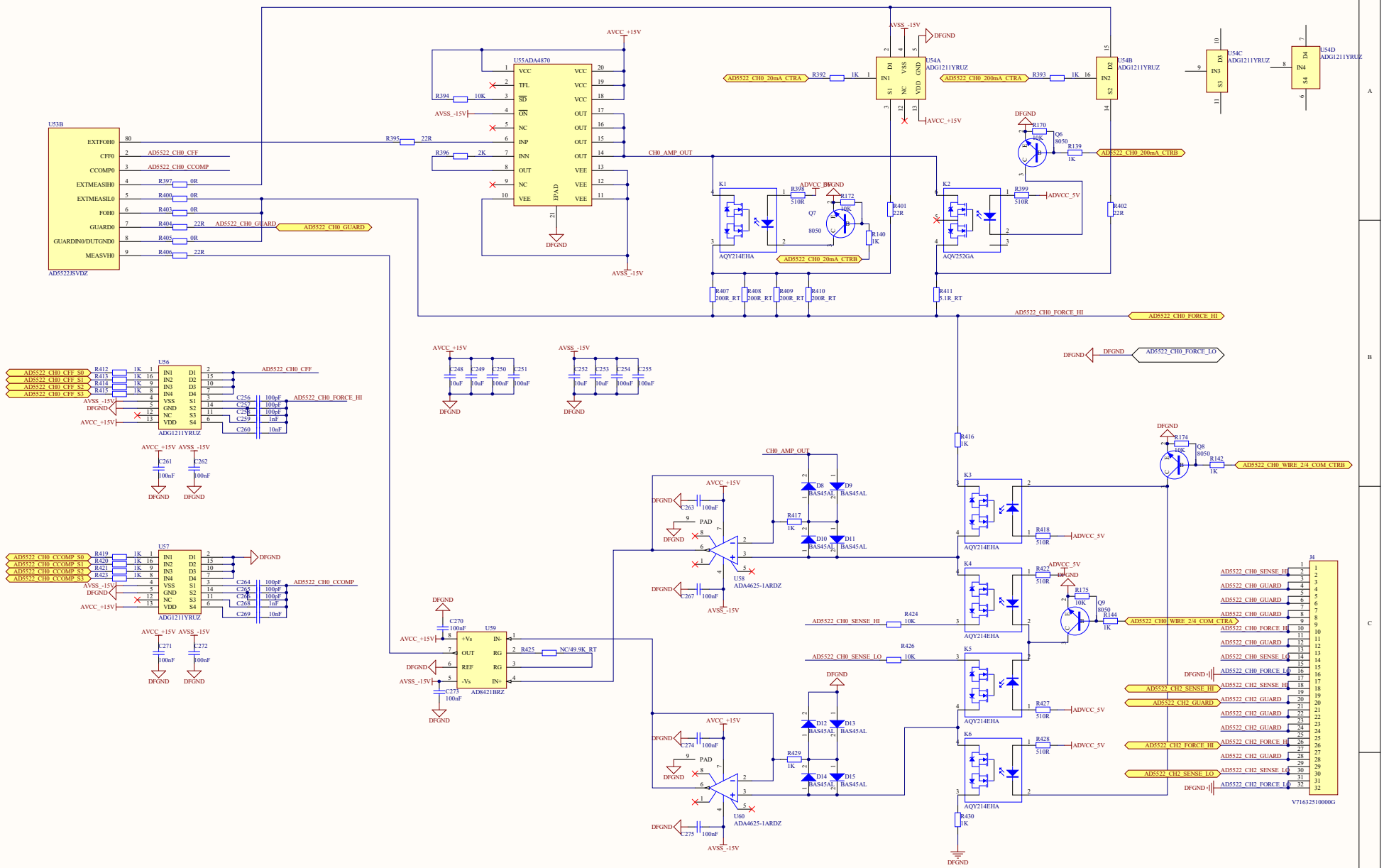

Title		
Size C	Number	Revision
Date: 2021/1/25		Sheet of
File: F:\YMC\..\14 AD5522_CH0.SchDoc		Drawn By:

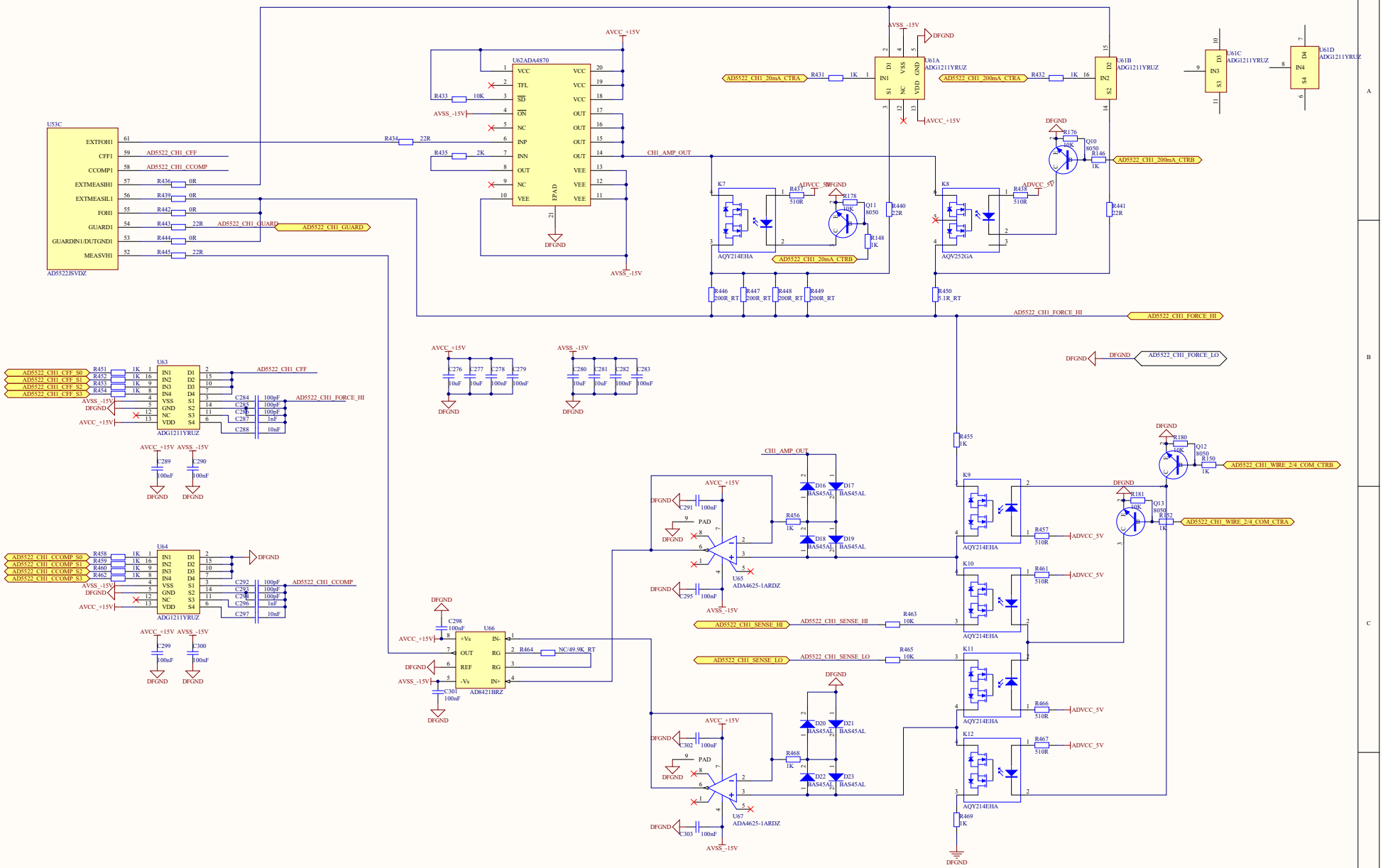

Title		
Size C	Number	Revision
Date: 2021/1/25		Sheet of
File: F:\YMC\..\15 AD5522_CH1.SchDoc		Drawn By:

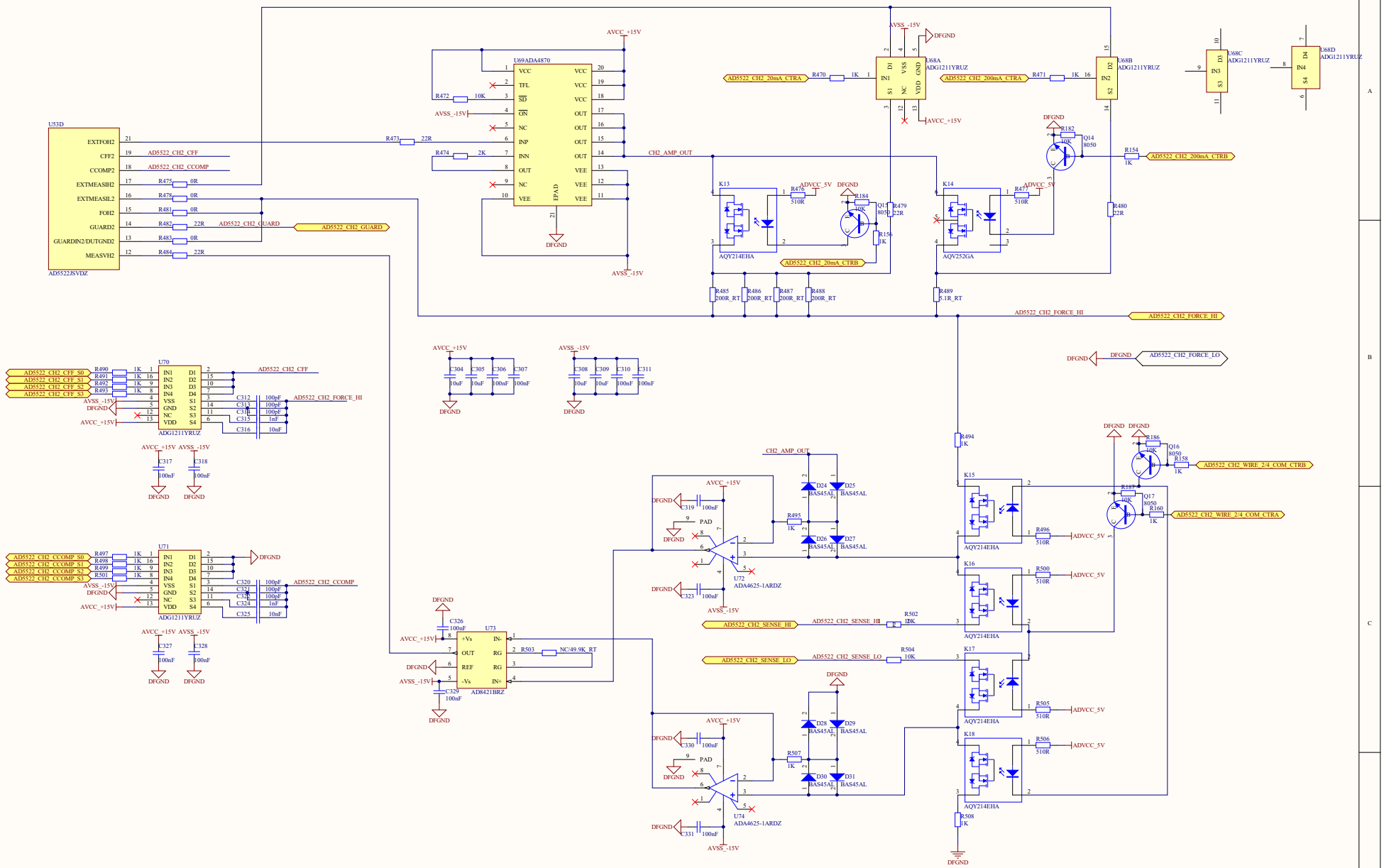

Title		
Size C	Number	Revision
Date: 2021/1/25	Sheet of	
File: F:\YMC\..\16 AD5522_CH2.SchDoc	Drawn By:	

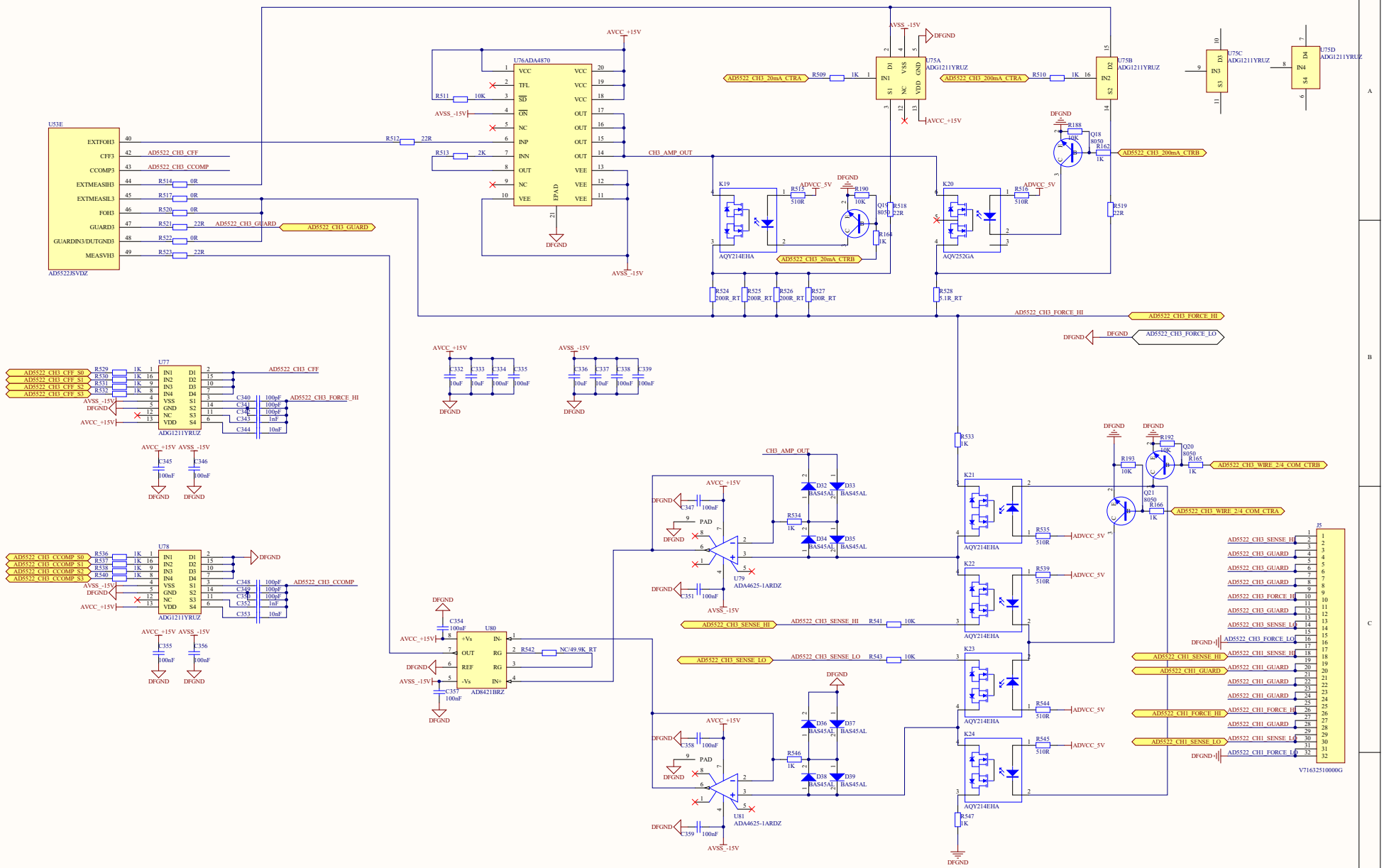

Title		
Size C	Number	Revision
Date: 2021/1/25		Sheet of
File: F:\YMC\..\17 AD5522_CH3.SchDoc		Drawn By: