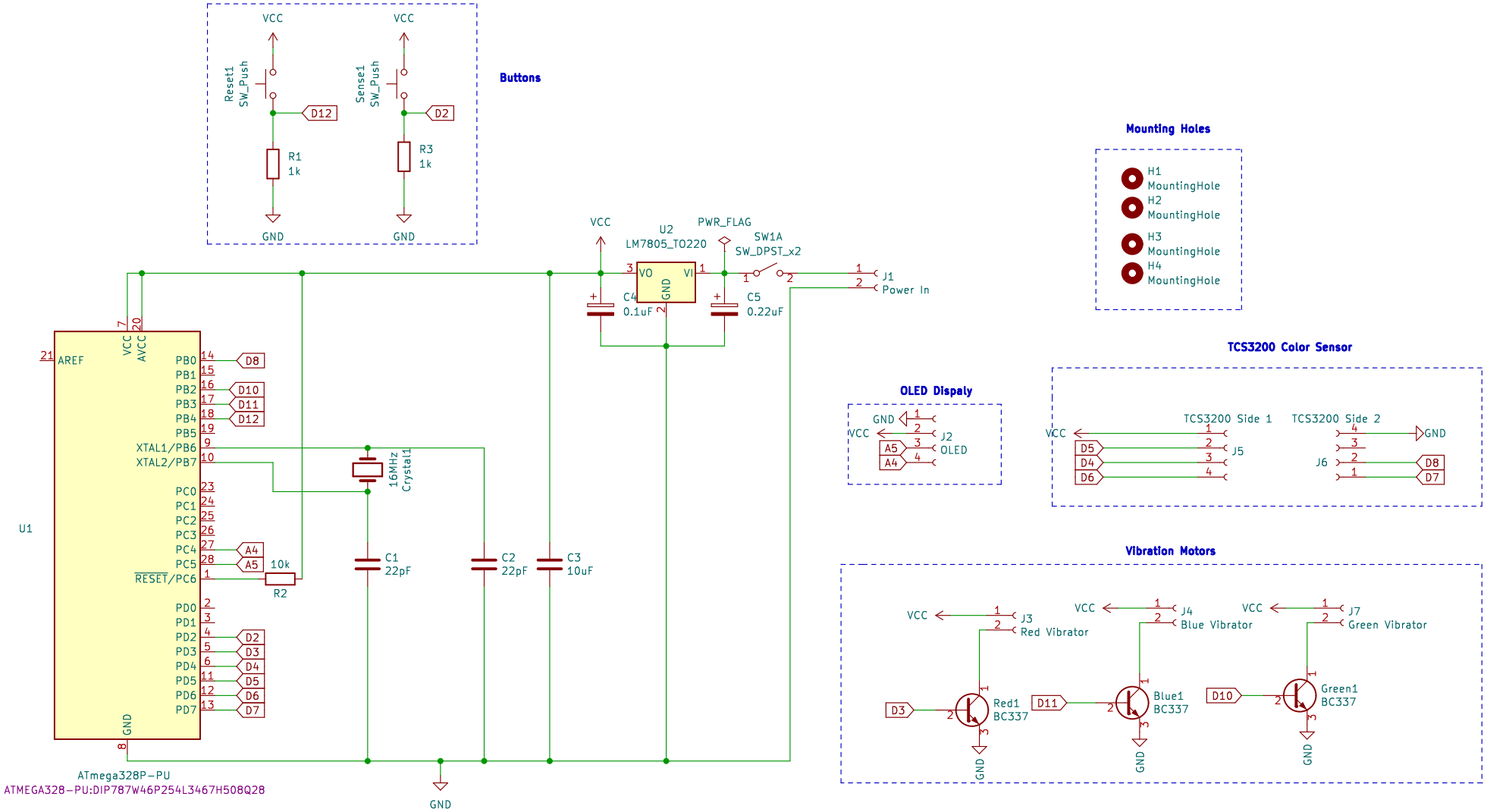
Buttons
VCC
Reset1
SW_Push
D12
R1
1k
GND
Sense1
SW_Push
D2
R3
1k
U2
LM7805_TO220
PWR_FLAG
SW1A
SW_DPST_x2
VO
VI
GND
C4
0.1uF
C5
0.22uF
J1
Power In
Mounting Holes
H1
MountingHole
H2
MountingHole
H3
MountingHole
H4
MountingHole
U1
AREF
VCC
AVCC
PB0
PB1
PB2
PB3
PB4
PB5
XTAL1/PB6
XTAL2/PB7
PC0
PC1
PC2
PC3
PC4
PC5
RESET/PC6
PD0
PD1
PD2
PD3
PD4
PD5
PD6
PD7
D8
D10
D11
D12
A4
A5
10k
R2
D2
D3
D4
D5
D6
D7
16MHz
Crystal1
C1
22pF
C2
22pF
C3
10uF
ATmega328P-PU
ATMEGA328-PU:DIP787W46P254L3467H508Q28
OLED Dispaly
J2
OLED
TCS3200 Color Sensor
TCS3200 Side 1
TCS3200 Side 2
J5
J6
Vibration Motors
J3
Red Vibrator
J4
Blue Vibrator
J7
Green Vibrator
Red1
BC337
Blue1
BC337
Green1
BC337
D3
D11
D10