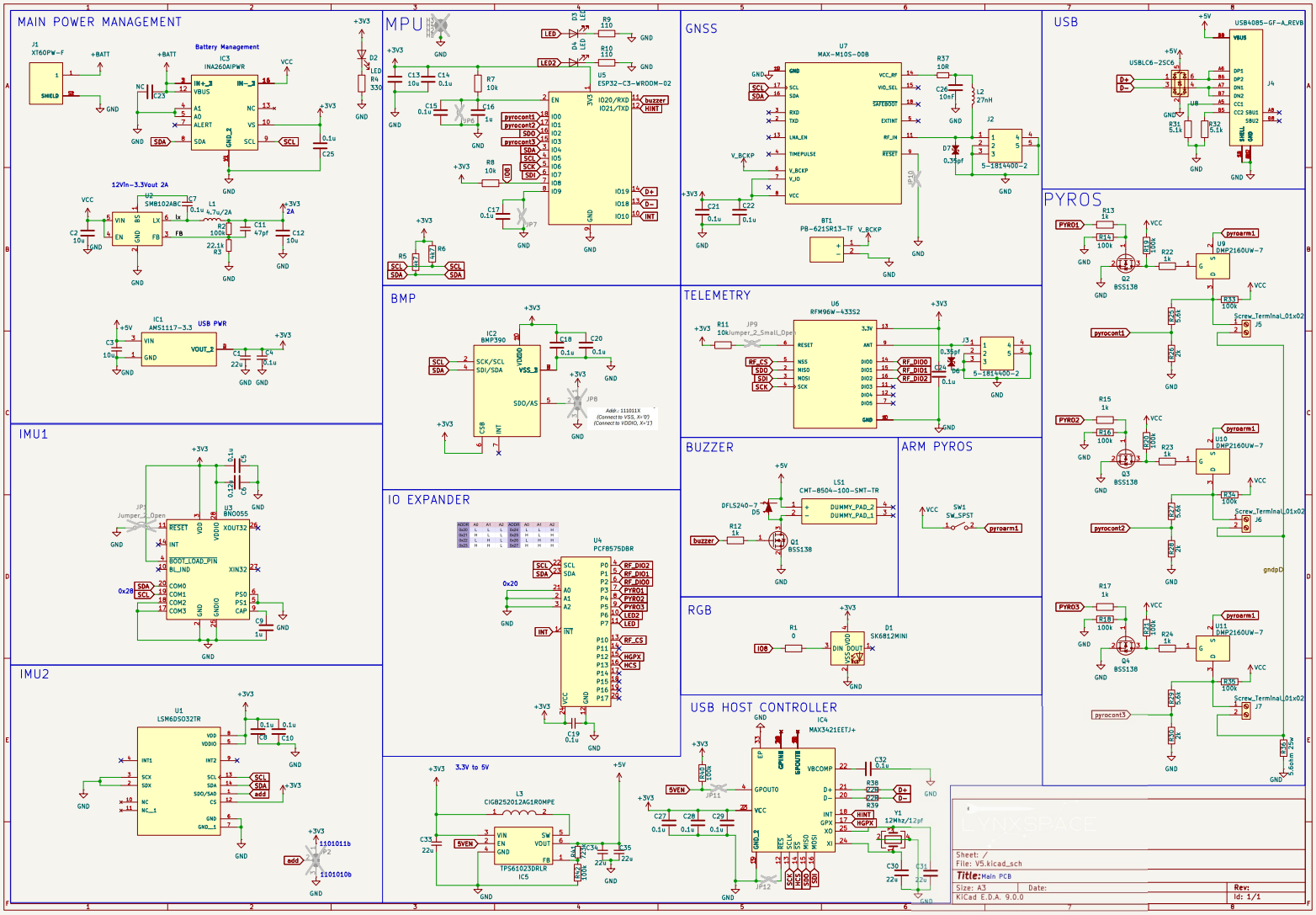
MAIN POWER MANAGEMENT
Battery Management
12Vin-3.3Vout 2A
USB PWR
MPU
BMP
IO EXPANDER
IMU1
IMU2
3.3V to 5V
GNSS
TELEMETRY
BUZZER
ARM PYROS
RGB
USB HOST CONTROLLER
USB
PYROS
LYNXSPACE
Sheet: /
File: V5.kicad_sch
Title: Main PCB
Size: A3
Date:
KiCad E.D.A. 9.0.0
Rev:
Id: 1/1