A Decomposition Matheuristic for the Transient Stability Constrained Unit Commitment at Hydro-Quebec

El Mehdi Er Raqabi, Abderrahman Bani, Mouad Morabit, Alexandre Blondin Massé, Alexandre Besner, Julien Fournier, and Issmaïl El Hallaoui

***Abstract*—This paper tackles a complex variant of the unit commitment problem at Hydro-Quebec, referred to as the transient stability constrained unit commitment (TSCUC) problem. First, we present the TSCUC mathematical formulation. Then, we analyze the TSCUC model to detect sources of complexity. After that, we develop an efficient matheuristic that decomposes the problem based on the temporal dimension. We enhance the matheuristic by effectively linearizing non-linear constraints and tuning the optimization solver's configurations. Finally, we highlight the matheuristic performance on real instances from Hydro-Quebec.**

***Index Terms*—MILP, large-scale optimization, matheuristic, unit commitment.**

Notation

Sets

$c \in \mathcal{C}$	Spillways.
$d \in \mathcal{D}$	Net heads (low, hi).
$f \in \mathcal{F}$	First contingency production loss.
$g \in \mathcal{G}$	Hydraulic generators.
$h \in \mathcal{H}$	Hydro plants.
$l \in \mathcal{L}$	Links.
$m \in \mathcal{M}$	Stability zones.
$n \in \mathcal{N}$	Rivers.
$r \in \mathcal{R}$	Reservoirs.
$e \in \mathcal{E}$	Topology constraints.
$p \in \mathcal{P}$	Periods.
$p \in \mathcal{P}'$	Periods, excluding the initial period p_0.
$y \in \mathcal{Y}$	Normal generator efficiencies ($\min$, opt, $\max$).
$y \in \mathcal{Y}'$	Generator efficiencies ($\min$, opt, $\max$, $stab$).
$z \in \mathcal{Z}$	Zones.

Relations

G_h	Generators of hydro plant h.
$\mathcal{H}_r$	Hydro plants supplied by reservoir r.
$\mathcal{H}_n$	Hydro plants discharging into river n.
$\mathcal{H}_m$	Hydro plants in stability zone m.
$\mathcal{K}_g$	Configurations involving generator g.
$\mathcal{K}_h$	Configurations of hydro plant h.
$\mathcal{K}_s$	Configurations involving super-generator s.
$\mathcal{L}_z^-$	Incoming links of zone z.
$\mathcal{L}_z^+$	Outgoing links of zone z.
$\mathcal{N}_r$	Rivers ending in reservoir r.
$\mathcal{S}_p$	Super-generators active at period p.
$\mathcal{C}_r$	Spillways available to reservoir r.
$\mathcal{C}_n$	Spillways flowing in river n.
s_g^p	Super-generator having generator g at period p.
p_s	Period corresponding to super-generator period s.
r_s	Reservoir corresponding to super-generator s.
p_e	Period at which topology constraint e is active.
p_f	Period at which first-contingency production loss (FCPL) f is active.

Parameters

$\alpha_{g,k}^{y,d}$	Power corresponding to generator g at net head d and efficiency y when the active configuration is k.
$\alpha_{s,k}^{y,d}$	Power corresponding to super-generator s at net head d and efficiency y when the active configuration is k.
$\underline{\alpha}_{s,k}^{y,d}$	Possible decrease in power for super-generator s at net head d and efficiency y when the active configuration is k.
$\bar{\alpha}_{s,k}^{y,d}$	Possible increase in power for super-generator s at net head d and efficiency y when the active configuration is k.
α_z^p	Net power between demand, non-dispatchable generation and interconnections flow in zone z at time p.
$\upsilon_{s,k,y,d}^{\text{trans}}$	Maximal margin of power for super-generator g at net head d, efficiency y, and transient events when the active configuration is k.
$\phi_{g,k}^{y,d}$	Flow turbined by generator g at net head d and efficiency y when the active configuration is k.
δ_p	Duration of period p.

Received 11 October 2024; revised 30 May 2025; accepted 14 August 2025. Date of publication 22 August 2025; date of current version 23 February 2026. This work was supported in part by Hydro-Quebec and in part by the Mathematics of Information Technology and Complex Systems (MITACS). Paper no. TPWRS-01711-2024. *(Corresponding author: Abderrahman Bani.)*

El Mehdi Er Raqabi and Issmaïl El Hallaoui are with Mathematics and Industrial Engineering Department, Polytechnique Montréal and GERAD, Montréal, QC H3C 3A7, Canada (e-mail: el-mehdi.er-raqabi@polymtl.ca).

Abderrahman Bani, Mouad Morabit, Alexandre Blondin Massé, Alexandre Besner, and Julien Fournier are with Hydro-Québec, Montreal, QC H2Z 1A4, Canada (e-mail: bani.abderrahman@hydroquebec.com).

Color versions of one or more figures in this article are available at https://doi.org/10.1109/TPWRS.2025.3599746.

Digital Object Identifier 10.1109/TPWRS.2025.3599746

© 2025 The Authors. This work is licensed under a Creative Commons Attribution 4.0 License. For more information, see https://creativecommons.org/licenses/by/4.0/

$\rho_{n,p}^{p'}$ Proportion of volume whose transit between periods p and p' in river n is completed.
$\underline{\xi}^{sfc}$ Low power threshold for secondary frequency control (SFC).
$\bar{\xi}^{sfc}$ High power range threshold for SFC.
$\bar{\eta}^{sfc}$ Total power range threshold for SFC.
ξ_m^{abs} Minimum reserve of stability to maintain in zone m.
ξ_m^{rate} Power rate stability to maintain in zone m.
ν_r Initial level at reservoir r.
λ_r^d Level of reservoir r at net head d.

Variables

$\mathbf{x}_k^p$ Binary variable equal to 1 if configuration k is active during period p, 0 otherwise.
$\mathbf{x}_g^p$ Binary variable equal to 1 if generator g is active during period p, 0 otherwise.
$\mathbf{u}_h^p$ Flow going during during period p in hydro plant h.
$\mathbf{b}_s$ Binary variable equal to 1 if super-generator s produces with high efficiency, i.e., between opt and $\max$, 0 otherwise.
$\mathbf{q}_w^p$ Worst north first-contingency production loss at period p.
$\mathbf{q}_{\mathrm{w}}^p$ Worst FCPL power at period p.
$\mathbf{q}_g^p$ Power produced by generator g during period p.
$\bar{\mathbf{q}}_g^p$ Available power increase of generator g during period p.
$\mathbf{q}_h^p$ Power produced by hydro plant h during period p.
$\underline{\mathbf{q}}_h^p$ Available power decrease of hydro plant h during period p.
$\bar{\mathbf{q}}_h^p$ Available power increase of hydro plant h during period p.
$\overleftarrow{\mathbf{q}}_l^p$ Power coming into link l during period p.
$\overrightarrow{\mathbf{q}}_l^p$ Power leaving link l during period p.
$\mathbf{q}_s^y$ Power produced by super-generator s at efficiency y.
$\mathbf{q}_s$ Power produced by super-generator s.
$\tilde{\mathbf{q}}^s$ Max power that can be produced by super-generator s during transient events.
$\hat{\mathbf{q}}_p$ Max power that can be produced for period p during transient events.
$\underline{\mathbf{q}}_s$ Available power decrease of super-generator s.
$\bar{\mathbf{q}}_s$ Available power increase of super-generator s.
$\mathbf{q}_s^{pfc}$ Available reserve power of super-generator s.
$\mathbf{a}_r^p$ Average volume in reservoir r at period p.
$\mathbf{v}_r^p$ Level of reservoir r at the end of period p.
$\overleftarrow{\mathbf{v}}_n^p$ Water flowing in river n at period p.
$\overrightarrow{\mathbf{v}}_n^p$ Water flowing out of river n at period p.
$\mathbf{v}_c^p$ Water flowing through spillway c at period p.
$\mathbf{w}_{s,k}^{y,d}$ Production weight of super-generator s at efficiency y and net head d when configuration k is active.

Expressions

$\mathbf{\Psi}_e$ Upper limit of topology constraint e.
$\underline{\mathbf{\Lambda}}_l^{\overleftarrow{p}}$ Lower limit of power going into link l at period p.
$\underline{\mathbf{\Pi}}_l^{\overleftarrow{p}}$ Upper limit of power going into link l at period p.
$\underline{\mathbf{\Lambda}}_l^{\overrightarrow{p}}$ Lower limit of power coming from link l at period p.
$\underline{\mathbf{\Pi}}_l^{\overrightarrow{p}}$ Upper limit of power coming from link l at period p.

Functions

$\Upsilon_p^{\mathcal{F}}(\cdot)$ Maximal FCPL value at period p for all possible FCPL f.
$\Xi_l^p(\cdot)$ Correction of power transiting through link l at period p by removing its loss.
$\Psi_r(\cdot)$ Approximation of the level of reservoir r from its volume.
$\Omega_p(\cdot)$ Stability threshold at period p from the worst north and south FCPL.

I. Introduction

HYDRO-QUEBEC (HQ) is a vertically integrated utility responsible for electricity generation, transmission, and distribution in the Quebec province. Its large grid comprises over 60 hydroelectric facilities and more than 260,000 Km transmission and distribution lines, of which over 11,000 Km are covered by 735 kV lines, making it the most extensive network in North America. The long transmission lines and large hydroelectric dams in the far north give the power grid its unique architecture, enabling the power generation to reach most destinations located thousands of kilometers in the south of Quebec. Grid stability is a big concern that the company must consider when planning operations. The stability aspects include multiple, nonlinear phenomena, such as voltage, frequency, and angular stabilities. However, since the generation and operations planning tools are mainly based on mixed integer linear programming (MILP), integrating stability considerations becomes quite challenging. Hence, this paper aims to tackle the transient stability constrained unit commitment (TSCUC) problem at HQ. Starting from a detailed formulation of the problem [1], a thorough analysis of the complexity sources is carried out, and a decomposition matheuristic is proposed. This decomposition significantly improves the solving of real instances provided by HQ.

The UC problem is fundamental in the electric power industry. It aims to determine an optimal schedule that ensures fulfilling the electricity demand at a minimum cost for the system as a whole, by deciding which generation unit should be activated and at which intensity. In the literature, there have been many relevant mathematical optimization models for the UC problem [2]. Contingency analysis is a computer application that uses a simulated model of the power system. This analysis is one of the crucial components in power system security analysis since it evaluates outage events that affect the power system performance [3]. Compared to other cases like ERCOT [4], HQ has had an everlasting interest in online real-time security-based monitoring systems. As early as 1982, Hydro-Québec deployed the first operational tool capable of providing dynamic transfer limits in real-time from the control center. Over the years, the utility progressively enhanced this capability by incorporating increasingly complex and refined datasets into its limit monitoring system, LIMSEL [5], which provides security assessments

based on offline dynamic simulations and strategic planning. Mathematically speaking, contingency adds several non-linear constraints to the optimization model. This problem, known in the literature as min-max linear programming (mmLP), involves solving linear programs having min and max functions added to their constraints. One of the ways to tackle these constraints is linearization to maintain a MILP formulation [6].

Many exact decomposition algorithms have been suggested to tackle the constrained variants of the unit commitment problem [7], [8], including the Lagrangian Relaxation (LR) [9], [10], [11], [12] and the Benders Decomposition (BD) [13], [14], [15], [16]. The main issue with the LR is the *oscillation along iterations*, while the main issue with the BD is the *slow convergence* [7]. In the Hydro-Quebec case presented in this paper, the TSCUC problem integrates the hydraulic constraints, which is not the case in most papers in the literature [7]. This significantly increases the size of the problem and, at the same time, makes the LR or BD decomposition less straightforward than the constrained variants in the literature. The large number of constraints makes the convergence towards optimal dual multipliers (Lagrangian multipliers) untractable. Also, the hydraulic component brings additional integer variables into the Benders subproblem, which makes the vanilla BD not applicable.

Given that Hydro-Quebec wants an efficient decomposition approach that can provide satisfactory solutions quickly and allow quick re-optimization if needed, this research presents a general and practical strategy for addressing the TSCUC. There are three main contributions: (1) a TSCUC model analysis that pinpoints the sources of complexity in the TSCUC problem at HQ, (2) a decomposition matheuristic for the TSCUC based on an effective time decomposition that tackles these sources of complexity, in particular, the non-linearity in the TSCUC, (3) a computational study on real HQ instances that shows the effectiveness of the proposed matheuristic in achieving a good trade-off between the quality of the solutions and the execution time required to obtain them, and accentuates various insights.

The rest of the work is organized as follows. Section II provides a summary of the problem formulation. The model analysis and the decomposition matheuristic are presented in Section IV and Section V, respectively. Section VI provides the computational study and business insights.

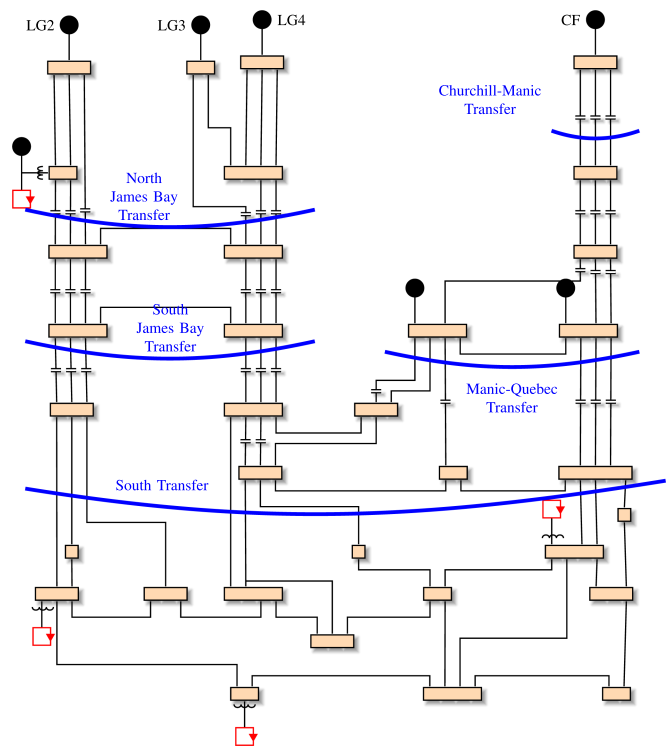

Fig. 1. Hydro-Quebec's main transmission grid [1].

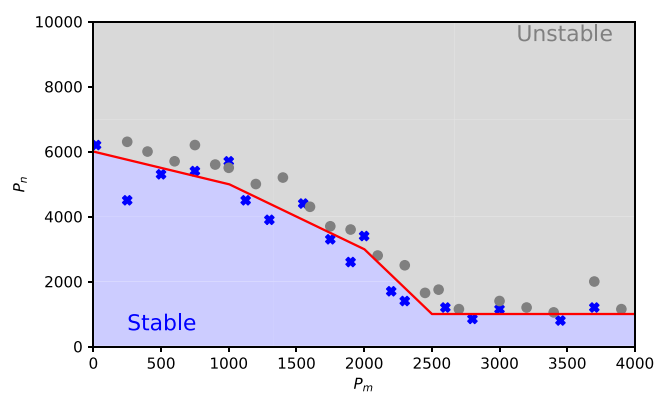

Fig. 2. Interface n's stability limit during power transit from interface m (adapted from [1]).

II. Hydro-Québec Transmission and Generation Characteristics

In this section, the specific characteristics of HQ's system are detailed. In Section II-A, the HQ transmission grid is presented, and a small explanation is given on how transient stability limits are determined. In Section II-B, the important characteristics of hydraulic generation are given. Both subsections give important details that are reflected in the mathematical model presented in Section III

A. Transmission Grid

Fig. 1 shows the main component of HQ's transmission grid. Since the grid is vast and constrained stability phenomena, HQ came up with the concept of power interface, where stability limits are monitored. The 735 kV transmission grid is mainly supervised using the 5 power interface described in Fig. 1. To determine the stability limits of each power interface, millions of transient stability simulations are performed for each interface. Article [1] goes into the details on how each simulation scenario is built. Once the simulations are done, the results are aggregated and an envelope is created around stable simulations. This process is conservative, and some stable results can be excluded from the envelope. Fig. 2 shows an example of a fictive stability limit calculation. This approach allows to integrate simulation results aiming to determine different types of stability issues like angular stability, voltage stability, or inter-area oscillations. The envelope representing the stability limits is the red line in

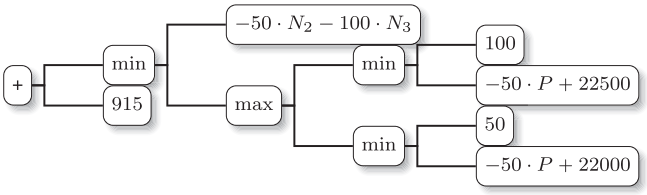

Fig. 3. The simplified tree of a min-max limit expression (adapted from [1]).

Fig. 2. This envelope can also be expressed by a min-max tree expression. Fig. 3 is an example of the smallest min-max tree expression used by HQ. The algebraic expression of the tree can be observed in (1):

$$\begin{aligned}\mathbf{\Psi}_n \leqslant\ & \min(\max(\min(-50P + 22\,500,\ 100),\\ & \min(-50P + 22\,000,\ 50))\\ & + (-50N_2 - 100N_3)) + 1500 \end{aligned} \tag{1}$$

This expression depends on the total production of the hydro plant given by P, and is reduced proportionally by the number of non-contributing generators in the two other hydro plants given by N_2 and N_3, respectively. This expression is non-convex, and it is necessary to use binary variables to linearize it. The limit tree can become quite big. For example, the South transfer power interface tree can have a depth up to 49 levels and up to 4900 nodes. In section IV-B2, the complexity created by this formulation will be discussed, and section V-C will propose a novel linearization that eliminates the need for binary variables.

Another important aspect of the TSCUC proposed in this paper is the absence of power flow models. This decision is justified by two aspects presented in this section. First, as previously described, HQ's grid has its generation located far north, and the load is located down south. The power flow is almost always unidirectional. Secondly, the 735 kV is not constrained by thermal limits since stability limits are reached much faster than thermal limits. There is no need to monitor individual line flow. This paper introduces the concept of zone and link as a replacement for the traditional power flow models. A zone is connected to another zone by a link. A linear approximation is used for each link to capture losses between the zones. The link represents a power interface defined previously and is bounded by a stability limit expression tree.

B. Hydraulic Generation

Hydraulic network: Since more than 90% of HQ's production comes from hydro plants, the hydraulic network must be represented in some detail. Basically, it is represented as a directed graph whose nodes represent *reservoirs* (where water can be accumulated), *rivers* (where water can travel to another downstream reservoir), *spillways* (which can be used to evacuate water without turbinating it) and *hydro plants* (where water flows are converted to power). The directed edges of the graph show the flow of water through the reservoirs, rivers, spillways, and hydro plants. Since the water speed is not constant, each river n is associated with a *unit hydrograph* $\Phi_n : \mathbb{R}^+ \to [0, 1]$, which maps the elapsed time t onto the proportion of water $\Phi_n(t)$ that arrived at the end of river n. The unit hydrograph of each river can be approximated by estimating each parameter $\rho_{n,p}^{p'}$ using the value of the water proportion, which arrived at the end of river n in the time interval $[p, p']$.

Production of hydro units: The water that flows into a hydro generator g belonging to a hydro plant h generates power, computed as follows. Let $\rho \approx 997$ be the volumic mass of water (in kg/m^3), $G \approx 9.81$ be the gravity acceleration (in m/s^2), Q be the turbined flow (in m^3/s), H be the net head (in meter), and $\eta_{g,h}(Q) < 1$ be the efficiency of g when the flow is Q. Then the power produced by h is given by [17] as follows:

$$P(H, Q) = \rho \cdot G \cdot Q \cdot H \cdot \eta_{g,h}(Q) \tag{2}$$

The value of H can be estimated by converting the reservoir volume variations, using a known predefined 1-to-1 function associating levels with volumes. Also, the formula (2) has two disadvantages. First, it is nonlinear. Also, estimating $\eta_{g,h}$ is complex in practice, and depends not only on g, but also on the state of the other hydro generators inside the hydro plant h. Hence, to remain linear, we approximate the feasible power surface [18] using a piecewise linear function. More precisely, the possible net heads can be linearized by interpolating between the fixed minimum (low) and maximum (hi) values. Similarly, to take into account the concave shape of hydro unit production, the possible *efficiency* of each generator can be discretized using 3 possible outputs, based on the generator level: $\max$ for maximal power, opt for optimal power, or $\min$ for minimal power. Also, in the case of a stability event, generators can generate a power higher than $\max$ for a short amount of time. This special efficiency is denoted by $stab$. It is obtained using the gross head instead since the stability events are shorter than the time necessary for turbulence effects to appear and affect the efficiency. The reader is referred to Fig. 5 of [1] for an illustration of how the production function is discretized.

Super-generator: Although each hydro generator has unique characteristics, it is often desirable to apply some similar operational decisions to groups of similar generators. To support this, the concept of *super-generator* was introduced in [1]. A super-generator groups multiple generators that can be operated with the same production weights for each efficiency y and net head d. Specifically, two generators g and g' belong to the same super-generator if : (1) they are in the same hydro plant, (2) they do not have any operational restrictions, (3) they do not belong to different first-contingency production loss (FCPL) sets, and (4) they do not have different topology constraints.

Hydro plant configurations: As highlighted above, the power generated at each hydro plant depends on its unique characteristics. It also depends on the availability and status of the remaining generators within the same hydro plant. To capture this dependence, HQ uses the concept of a hydro plant configuration, which defines a feasible subset of generators that can be active simultaneously in a given hydro plant at each time step. Since the status of a generator is either active or inactive, there can be theoretically up to $2^{|G_h|}$ configurations for each hydro plant h where G_h is the set of generators of h. This significantly augments the size of the TSCUC's MILP problem.

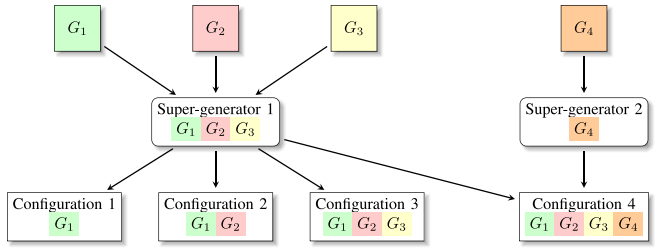

Fig. 4. Example of super-generators and configurations for a hydroplant with 4 generators.

Still, many configurations can be removed in practice based on the planned unavailability of some generators. A generator is restricted if it undergoes maintenance, has power and flow restrictions for operational purposes, and has some FCPL constraints and topology-based constraints (TC) (detailed below). By incorporating unavailability and restrictions, it is possible to decrease the number of hydro plant configurations. An algorithm enumerating those configurations is described in [1]. Note that hydro plant configurations are complementary to the super-generator abstraction: while super-generators ensure that a subset of generators have the same weight, configurations ensure operational feasibility by explicitly defining which generator combinations can be used at each time step. An illustrative example is given in Figure 4.

III. Mathematical Model

Following the power grid representation described in Subsection II-A, we can summarize the resulting mathematical formulation. For sake of readability, the notation has been adapted from [1] according to the following convention. We use the calligraphic style for sets and relations, lowercase Greek letters for parameters, bold lowercase letters for decision variables, and uppercase Greek letters for expressions and functions (see the alphabetically ordered Notation Section for more details). Physical quantities are measured with respect to the international system of units, i.e., power is in megawatts (MW), time is in seconds (s), distance is in meters (m), volume is in m^3, and flow is in m^3/s.

Objective function: HQ does not operate a market or thermal generators. The objective function of the TSCUC is composed of many operational objectives related to water management. For this paper, two of these objectives are modeled. Since the objective of this paper is the solving performance, the simplified objective function is sufficient. First, the number of stop and start operations is minimized:

$$\min \sum_{g\in\mathcal{G}} \sum_{p\in\mathcal{P}} \beta_g^p |\mathbf{x}_g^p - \mathbf{x}_g^{p-1}| \tag{3}$$

The second goal of the objective function is to minimize water spilling:

$$\min \sum_{r\in\mathcal{R}} \sum_{p\in\mathcal{P}'} \sum_{c\in\mathcal{C}_r} \beta_c^p \mathbf{v}_c^p \tag{4}$$

The objective function is a linear combination of the two goals above (using weights β_g^p and β_c^p).

Water conservation constraints: The following constraints ensure water conservation throughout the power generation grid:

$$\mathbf{v}_r^{p_0} = \nu_r \qquad \forall r \tag{5}$$

$$\mathbf{v}_r^p = \mathbf{v}_r^{p-1} + \sum_{n\in\mathcal{N}_r} \overrightarrow{\mathbf{v}}_n^p - \sum_{h\in\mathcal{H}_r} \delta_p \mathbf{u}_h^p - \sum_{c\in\mathcal{C}_r} \mathbf{v}_c^p \qquad \forall r\ \forall p\in\mathcal{P}' \tag{6}$$

$$\mathbf{a}_r^p = \Psi_r((\mathbf{v}_r^{p-1} + \mathbf{v}_r^p)/2) \qquad \forall r\ \forall p\in\mathcal{P}' \tag{7}$$

$$\overleftarrow{\mathbf{v}}_n^p = \sum_{h\in\mathcal{H}_n} \delta_p \mathbf{u}_h^p + \sum_{c\in\mathcal{C}_n} \mathbf{v}_c^p \qquad \forall n\ \forall p \tag{8}$$

$$\overrightarrow{\mathbf{v}}_n^p = \sum_{p'\leqslant p} \rho_{n,p'}^p \overleftarrow{\mathbf{v}}_n^{p'} \qquad \forall n\ \forall p \tag{9}$$

Production constraints: The production constraints model the unit commitment problem while taking into consideration the features of generators:

$$\mathbf{b}_s \geqslant \sum_{k\in\mathcal{K}_s} \sum_{d\in\mathcal{D}} \mathbf{w}_{s,k}^{\max,d} \qquad \forall s \tag{10}$$

$$1 - \mathbf{b}_s \geqslant \sum_{k\in\mathcal{K}_s} \sum_{d\in\mathcal{D}} \mathbf{w}_{s,k}^{\min,d} \qquad \forall s \tag{11}$$

$$1 = \sum_{k\in\mathcal{K}_h} \mathbf{x}_k^p \qquad \forall h\ \forall p \tag{12}$$

$$\mathbf{x}_k^{p_s} = \sum_{y\in\mathcal{Y}} \sum_{d\in\mathcal{D}} \mathbf{w}_{s,k}^{y,d} \qquad \forall k\ \forall s \tag{13}$$

$$\mathbf{x}_g^p = \sum_{k\in\mathcal{K}_g} \mathbf{x}_k^p \qquad \forall g\ \forall p \tag{14}$$

Once we commit all units, it is possible to measure the power of the various components (e.g., hydro plants, hydro plant configurations, generators, and super-generators). Furthermore, we can also measure variations in the level of each reservoir as well as the flow turbinated by each hydro plant. These measures are in the following constraints:

$$\mathbf{q}_h^p = \sum_{g\in G_h} \mathbf{q}_g^p \qquad \forall h\ \forall p \tag{15}$$

$$\mathbf{q}_g^p = \sum_{k\in\mathcal{K}_g} \sum_{y\in\mathcal{Y}} \sum_{d\in\mathcal{D}} \alpha_{g,k}^{y,d}\ \mathbf{w}_{s_g^p,k}^{y,d} \qquad \forall g\ \forall p \tag{16}$$

$$\mathbf{q}_s^y = \sum_{k\in\mathcal{K}_s} \sum_{d\in\mathcal{D}} \alpha_{s,k}^{y,d}\ \mathbf{w}_{s,k}^{y,d} \qquad \forall s\ \forall y \tag{17}$$

$$\mathbf{q}_s = \sum_{y\in\mathcal{Y}} \mathbf{q}_s^y \qquad \forall s \tag{18}$$

$$\mathbf{u}_h^p = \sum_{g\in G_h} \sum_{k\in\mathcal{K}_{s_g^p}} \sum_{y\in\mathcal{Y}} \sum_{d\in\mathcal{D}} \phi_{g,k}^{y,d}\ \mathbf{w}_{s_g^p,k}^{y,d} \qquad \forall h\ \forall p \tag{19}$$

$$\mathbf{a}_{r_s}^{p_s} = \sum_{k\in\mathcal{K}_s}\sum_{y\in\mathcal{Y}}\sum_{d\in\mathcal{D}} \lambda_{r_s}^{d}\ \mathbf{w}_{s,k}^{y,d} \qquad \forall s \tag{20}$$

Transmission constraints: Each zone has to respect power equality constraints similarly to a bus power constraint in a traditional power flow. Power flowing in and out of a zone by the links has to be equal to the zone demand, dispatchable generation, non-dispatchable generation, and flow on interconnectors. Non-dispatchable generation is mainly composed of run-of-the-river generation and forecasted wind generation. As of now, HQ has no solar generation directly connected to the transmission system, but if it had to happen, forecasted solar generation would be aggregated with other non-dispatchable generation sources.

$$\alpha_z^p = \sum_{h\in\mathcal{H}_z} \mathbf{q}_h^p + \sum_{l\in\mathcal{L}_z^-} \overrightarrow{\mathbf{q}}_l^p - \sum_{l\in\mathcal{L}_z^+} \overleftarrow{\mathbf{q}}_l^p \qquad \forall z\ \forall p \tag{21}$$

Power going through links has to be monitored. First, power going on a link is linked to the output by a linear function approximating the losses on the link. Depending on the power interface, the limits can be applied to the flow going in or out of the link. Expressions $\underline{\overrightarrow{\mathbf{\Lambda}}}_l^p$, $\underline{\overrightarrow{\mathbf{\Pi}}}_l^p$, $\underline{\overleftarrow{\mathbf{\Lambda}}}_l^p$ and $\underline{\overleftarrow{\mathbf{\Pi}}}_l^p$ are all min-max expressions like the ones described in Subsection II-A.

$$\overrightarrow{\mathbf{q}}_l^p = \Xi_l^p(\overleftarrow{\mathbf{q}}_l^p) \qquad \forall l\ \forall p \tag{22}$$

$$\underline{\overrightarrow{\mathbf{\Lambda}}}_l^p \leqslant \overrightarrow{\mathbf{q}}_l^p \leqslant \underline{\overrightarrow{\mathbf{\Pi}}}_l^p \qquad \forall l\ \forall p \tag{23}$$

$$\underline{\overleftarrow{\mathbf{\Lambda}}}_l^p \leqslant \overleftarrow{\mathbf{q}}_l^p \leqslant \underline{\overleftarrow{\mathbf{\Pi}}}_l^p \qquad \forall l\ \forall p \tag{24}$$

While HQ does not model the power flow equation in its TSCUC problem, outages can cause local generation restriction and limit the generation of certain hydroplants. By using a topology processor, HQ identifies a set $\mathcal{E}$ of topology constraints. Each topology constraint has a predefined list of generators associated with it and a specific limit expression $\mathbf{\Psi}_e$.

$$\sum_{g\in\mathcal{S}_e}\left(\mathbf{q}_s^{p_e} + \bar{\mathbf{q}}_s^{p_e}\right) \leqslant \mathbf{\Psi}_e \qquad \forall e \tag{25}$$

The following set of constraints is used to ensure sufficient power reserve for secondary frequency control (SFC) for the area generation control (AGC) system:

$$\bar{\mathbf{q}}_s = \sum_{k\in\mathcal{K}_s}\sum_{y\in\mathcal{Y}}\sum_{d\in\mathcal{D}} \bar{\alpha}_{s,k}^{y,d}\ \mathbf{w}_{s,k}^{y,d} \qquad \forall s \tag{26}$$

$$\underline{\mathbf{q}}_s = \sum_{k\in\mathcal{K}_s}\sum_{y\in\mathcal{Y}}\sum_{d\in\mathcal{D}} \underline{\alpha}_{s,k}^{y,d}\ \mathbf{w}_{s,k}^{y,d} \qquad \forall s \tag{27}$$

$$\bar{\mathbf{q}}_h^p = \sum_{s\in Sg_{h,p}} \bar{\mathbf{q}}_s \qquad \forall h\ \forall p \tag{28}$$

$$\underline{\mathbf{q}}_h^p = \sum_{s\in Sg_{h,p}} \underline{\mathbf{q}}_s \qquad \forall h\ \forall p \tag{29}$$

$$\sum_{h\in\mathcal{H}} \underline{\mathbf{q}}_h^p \geqslant \underline{\xi}^{sfc} \qquad \forall p \tag{30}$$

$$\sum_{h\in\mathcal{H}} \bar{\mathbf{q}}_h^p \geqslant \bar{\xi}^{sfc} \qquad \forall p \tag{31}$$

$$\sum_{h\in\mathcal{H}}\left(\underline{\mathbf{q}}_h^p + \bar{\mathbf{q}}_h^p\right) \geqslant \bar{\eta}^{sfc} \qquad \forall p \tag{32}$$

The following constraints measure the maximal power output possible by all generators during a frequency event. HQ uses this measure to approximate the system's inertia and strength used to determine the maximal value of the worst FCPL. The set $\mathcal{F}$ is a pool of FCPL candidates determined using a topology processor similarly to set $\mathcal{E}$ for the topology constraints.

$$\tilde{\mathbf{q}}^s = \sum_{k\in\mathcal{K}_s}\sum_{d\in\mathcal{D}}\sum_{y\in\mathcal{Y}} \alpha_{s,k}^{stab,d}\ \mathbf{w}_{s,k}^{y,d} \qquad \forall s \tag{33}$$

$$\hat{\mathbf{q}}_p = \sum_{s\in\mathcal{S}_p} \tilde{\mathbf{q}}^s \qquad \forall p \tag{34}$$

$$\mathbf{q}_{\mathrm{w}}^p \leqslant \Upsilon_p^{\mathcal{F}}(\hat{\mathbf{q}}_p) \qquad \forall p \tag{35}$$

$$\mathbf{q}_{\mathrm{w}}^p \geqslant \sum_{g\in G_f} (\mathbf{q}_s + \bar{\mathbf{q}}_s) \qquad \forall f \tag{36}$$

Finally, the PFC margins are linked to the worst FCPL and are modeled using the constraints below. We add constraints to monitor regional PFC margins.

$$\mathbf{q}_s^{pfc} = \sum_{k\in\mathcal{K}_s}\sum_{y\in\mathcal{Y}}\sum_{d\in\mathcal{D}} \upsilon_{s,k,y,d}^{\text{trans}}\ \mathbf{w}_{s,k}^{y,d} \qquad \forall s \tag{37}$$

$$\sum_{s\in\mathcal{S}_p} \mathbf{q}_s^{pfc} \geqslant \Omega_p(\mathbf{q}_w^p) \qquad \forall p \tag{38}$$

$$\sum_{h\in\mathcal{H}_m}\sum_{s\in Sg_{h,p_s}} \mathbf{q}_s^{pfc} \geqslant \min\left(\xi_m^{abs}, \xi_m^{rate}\hat{\mathbf{q}}_p\right) \qquad \forall m \tag{39}$$

IV. TSCUC Analysis

We analyze the TSCUC model to identify the sources of complexity. To do so, we outline the approach followed at HQ, analyze the TSCUC model, and highlight the key findings.

A. Status At Hydro-Quebec

To tackle the TSCUC, HQ's relied on the expertise of its operators. These operators combine simulations with manual tuning to elaborate power production schedules. Still, despite being practical, these schedules require a lot of time to be constructed without any quality guarantee. Furthermore, these manually-tuned approaches followed by HQ's operators do not incorporate all the business rules of the industry. They also require regular solving of instances to deal with frequent perturbations and disruptions. For instance, power demand depends on the market, which fluctuates continuously. Also, power production is subject to disruptions due to maintenance plans or group failures. Thus, quick recovery is a must.

B. TSCUC Analysis

We analyze the TSCUC model. To do so, we investigate the TSCUC model, i.e., the objective function, the constraints, and the decision variables. We used a representative TSCUC instance

provided by HQ for the analysis. The default parametrization of the CPLEX version 20.1.0.0 was used for all experiments.

1) Objective: The objective function does not show any complexity, since it mainly minimizes the maneuvers number and water spilling.

2) Constraints: All model constraints are linear except the stability limits constraints discussed in Section II. One of the main challenges is incorporating those transient stability limits while maintaining the TSCUC as a MILP model. The functions L and U produced are arbitrarily nested compositions of linear expressions, together with the n-ary $\max$ and $\min$ functions.

Currently, these constraints are linearized following the four elementary cases: $x \geqslant \min(y, z)$, $x \leqslant \min(y, z)$, $x \geqslant \max(y, z)$, and $x \leqslant \max(y, z)$, where x, y, z are some continuous variables. The first and fourth elementary cases require adding binary and big-M constraints into the model, which makes it more complex to solve.

Using the classic linearization above, we confirm that solving the representative TSCUC instance becomes relatively quick without the transient stability constraints. On the contrary, the model is complex and needs a large execution time to reach satisfactory solutions for the TSCUC model with the transient stability constraints. It follows that the TSCUC model with the transient constraints is significantly less coupled than the TSCUC model without the transient stability restrictions. The analysis confirms that the other constraints do not influence either the gap or the execution time. Thus, for the TSCUC model, the complicating constraints are the transient stability constraints.

3) Variables: The other difficulty to tackle is the decision variables corresponding to hydro plant configurations. Although the number of hydro plant configurations can be reduced by exploiting generators' symmetries, the number of possible configurations remains relatively high in the worst case. In this case, when exploring the space of possible configurations during the solving, the branching seems hard to optimize.

Given the large number of configurations and the resulting large number of binary variables, the solution of the TSCUC's linear relaxation (LR) is highly fractional. While this solution is found quickly, the solver spends a lot of time in the branch and bound ($B\&B$) tree before reaching a first feasible solution, which he then needs to improve. This first observation pushes us to evaluate the decision variables' effect on the execution time and solution quality, in particular the binary variables. From the problem description in II, we infer that there are three clusters of binary variables: $\mathcal{B}_1$ corresponding to the set of binary variables $\mathbf{x}_k^p$ related to active configurations, $\mathcal{B}_2$ corresponding to the set of binary variables $\mathbf{x}_g^p$ related to active generators, and $\mathcal{B}_3$ corresponding to the set of binary variables $\mathbf{b}_s$ related to super-generators production efficiencies.

Table I describes some statistics related to these three clusters for the representative instance, in particular, the number of variables in each cluster, the ratio of the number of variables in each cluster and the total number of binary variables, the number of non-zero variables in each cluster, and the ratio of the number of non-zero variables in each cluster and the total number of non-zero binary variables.

TABLE I
BINARY CLUSTERS

Cluster	ID	# Variables	% Cluster	# Non-zeros	% Non-zeros
$\mathbf{x}_k^p$	1	17759	**88.41**	624	**3.51**
$\mathbf{x}_g^p$	2	384	1.91	14	3.65
$\mathbf{b}_s$	3	1944	9.68	1011	52.01

Algorithm 1: Variable Analysis.

```
Input: x, α
x^0 = SOLVE(x, α)
for c ∈ {1, 2, 3} do
    forall x_n ∈ B_c do
        if x_n^0 = 1 then
            BOUNDS(x_n, 1, 1)
        end
    end
    WARMSTART(x^0)
    x* = SOLVE(x, α)
    forall x_n ∈ B_c do
        BOUNDS(x_n, 0, 1)
    end
end
```

Table I confirms that the binary variables corresponding to the configurations $\mathbf{x}_k^p$ represent more than 80% of the binary variables. Still, less than 4% of these variables are strictly positive in the solution of the representative instance. This implies that these variables are the complicating variables and have possibly the largest effect on the execution time.

To confirm the observation above, we implemented the following analysis procedure. We run CPLEX on the TSCUC MILP for a few minutes. In the obtained solution, we proceed as follows: for each one of the three clusters, we fix to 1 the variables for which the value is equal to 1 in the obtained solution, and we run CPLEX on the TSCUC MILP again using the obtained optimal solution as a warm-start. This allows us to check whether solving the MILP is more effective when some binary variables are fixed from each cluster. Algorithm 1 describes this strategy.

Formally, we run CPLEX on the TSCUC MILP with a cutoff time α using the procedure $solve(x, \alpha)$, x being a vector of variables with elements x_n. We denote the integer solution found x^0 with elements x_n^0. We fix to 1 the variables of cluster c that are equal to 1in x^0 using the procedure $bounds(x_n, 1, 1)$ where $x_n \in \mathcal{B}_c$. This is done for each cluster of variables. The procedure $bounds(x, \underline{x}, \bar{x})$ allows also fixing the lower and upper bounds of a variable $x \in \mathbb{R}^n$ where $n \in \mathbb{N}$ to $\underline{x}$ and $\bar{x}$, respectively. The optimal solution obtained x^0 is used to warm-start the subsequent CPLEX execution. This is done using the procedure $warmstart(x^0)$. We solve the obtained subproblem again with the same cutoff time above. The obtained solution is denoted x^* with its elements being x_n^*.

Based on the three clusters, we conducted three fixing scenarios. Table II gives the obtained results. After fixing, we provide the number of binary variables (# Binaries) in the TSCUC model

TABLE II
VARIABLE ANALYSIS RESULTS

Cluster	# Binaries	1st Gap(%)	1st Time (s)	Opt Gap(%)	Opt Time (s)
Original	20087	100%	3600	100.00	–
$\mathbf{x}_k^p$	15095	63	33	0.00	96
$\mathbf{x}_g^p$	314	100	3600	100.00	–
$\mathbf{b}_s$	1671	100	3600	100.00	–

for each cluster. We ran each scenario for one hour, and if no solution was found, the gap was set to 100% . For the $\mathbf{x}_k^p$ cluster and the original TSCUC MILP, CPLEX needs a lot of time to find a solution. However, following the fixing, the first gap (1st Gap) of 63% is obtained within 33s (1st Time). The optimal Gap (Opt Gap) is also obtained within 96s (Opt Gap). Regarding other clusters, the execution time remains high and the solution quality remains low, inferring that fixing these variables does not have any effect on the execution time. Consequently, the $\mathbf{x}_k^p$ variables are the complicating variables.

These results support the observation that the variables $\mathbf{x}_k^p$ affect the process of solving the problem. From a business perspective, we note the following to confirm this. Hundreds of different group configurations could be operating at any given time in each hydro plant. These equivalent configurations lead to high symmetry in the TSCUC model, which lengthens the CPLEX execution time required to obtain acceptable solutions and renders the default CPLEX obsolete. Moreover, only one configuration should be chosen from all of the available configurations. This leads to highly fractional LR due to the $\mathbf{x}_k^p$ variables.

V. DECOMPOSITION MATHEURISTIC

We summarize the steps that have been taken to address the various complexity sources found in the previous section. Next, we introduce the decomposition matheuristic. A new linearization for the transient stabilities is also discussed. Finally, we emphasize the relevance of tuning the solver to accelerate solving, in particular for the TSCUC MILP.

A. Motivation

The TSCUC analysis generates the following. For the constraints, the classic linearization of the power stability constraints adds a lot of binary variables and big-M constraints into the model. For the binaries, the $\mathbf{x}_k^p$ variables imply another relevant perspective that allows effectively solving the TSCUC MILP. The linear relaxation provides an interesting lower bound. Consequently, the idea is to implement a matheuristic that will deal with the complicating constraints and variables, and quickly improve the primal bounds. Using this matheuristic, we expect to prune unpromising leaves in the B&B tree, and as a result, accelerate the solving. We tackle the problem from three dimensions: decomposition of the time horizon, linearization of constraints, and solver's tuning. We refer to the designed decomposition matheuristic, presented next, as the Relax-Solve-Fix-Correct ($\mathcal{RSFC}$) matheuristic. Then, we highlight the linearization of transient stability constraints before discussing the importance of tuning the CPLEX solver's setting.

B. $\mathcal{RSFC}$ Matheuristic

We summarize the $\mathcal{RFSC}$ matheuristic in Algorithm 2. It is inspired by successful matheuristics in the literature [19]. It consists of decomposing the horizon into windows, where each window is an interval with few periods. Then, we optimize by rolling through these windows. The number of windows (Φ) is obtained by dividing the horizon length by the number of periods in each window. The matheuristic has four phases: *Relax*, *Solve*, *Fix*, and *Correct*. In the *Relax* phase, we pick the first window (ϕ), and we keep all corresponding $\mathbf{x}_k^p$ variables binary. All other binary variables in the MILP model are relaxed (integrality). A variable $\mathbf{x}_k^p$ corresponds to window ϕ if its index p belongs to the time interval of this window. In the *Solve* phase, we solve the MILP. In the *Fix* phase, we fix the $\mathbf{x}_k^p$ corresponding to window ϕ to their solution values. We move into the subsequent window, and the process continues until rolling through the whole time horizon. Finally, in the *Correct* phase, we maintain all the fixed $\mathbf{x}_k^p$ variables, restore all other binaries of the MILP to their binary state, and solve the MILP model. If the model is feasible, we return the solution x^*. Otherwise, we correct by tackling unfeasibilities. This is done using function $correct(x, \alpha)$. In this function, we relax conflicting $\mathbf{x}_k^p$ and solve again. The process continues until reaching feasibility. We return solution x^*. It is worth mentioning that instead of partitioning the time horizon, we keep the overlapping between consecutive windows. Such a strategy transfers information between windows and consequently ensures better results.

Algorithm 2: $\mathcal{RSFC}$ Matheuristic.

Input: x, α, Φ, $\phi \leftarrow 1$
while $\phi < \Phi$ **do**
  Relax $\mathbf{x}_k^p$ variables out of the current window ϕ
  Relax all other binary variables
  $x^* \leftarrow \text{SOLVE}(x, \alpha)$
  Fix the $\mathbf{x}_k^p$ variables in the current window to their values
  $\phi \leftarrow \phi + 1$
end
Restore all other binary variables to Binary
$x^* \leftarrow \text{SOLVE}(x, \alpha)$
$x^* \leftarrow \text{CORRECT}(x, \alpha)$
Return x^*

While we discussed a time-based variant of the $\mathcal{RFSC}$ matheuristic, it is worth mentioning that there are other decomposition strategies, such as the space-based decomposition. The latter consists of decomposing $\mathbf{x}_k^p$ based on their hydro plant.

C. Transient Stability Constraints

For the transient stability constraints (see Example 1 below), it is not necessary to linearize them exactly. When linearizing them exactly, we add complicating binary variables and big-M

constraints into the model, as shown in the classic linearization discussed in the previous section (Model 1 of Example 1). Furthermore, the latter does not consider the changing objective function in the model. With a changing objective function, it is possible to approximate the transient stability constraints by adding real variables into the objective function (Model 2 of Example 1). Such a strategy eliminates complicating binaries and big-M constraints coming from the classic linearization, thus providing a better model that ensures close, if not similar, results. We highlight this observation in the example below.

Example 1: Let us consider the following model:

$$\begin{aligned} \textbf{Min}\ & c^T x && \text{(Model)} \\ \text{s.t.}:\ & Ax + By + Cz \geqslant e \\ & w \geqslant \min(y, z) \\ & x \in X,\ \ y \in Y,\ \ z \in Z,\ \ w \in W \end{aligned}$$

The classic linearization of Model is:

$$\begin{aligned} \textbf{Min}\ & c^T x && \text{(Model 1)} \\ \text{s.t.}:\ & Ax + By + Cz \geqslant e \\ & w \geqslant y - M + Mb \\ & w \geqslant z - Mb \\ & z - y \leqslant Mb \\ & y - z \leqslant M(1 - b) \\ & x \in X,\ \ y \in Y,\ \ z \in Z,\ \ w \in W \\ & b \in \{0, 1\}^{|w|} \end{aligned}$$

where M is a sufficiently large scalar and b is the binary vector of size $|w|$ (the size of vector variable w), such that element $b_i = 1$ if $y_i \leqslant z_i$, and 0 otherwise (y_i and z_i being the elements of vectors y and z, respectively).

By introducing a real vector t, we obtain the following model:

$$\begin{aligned} \textbf{Min}\ & c^T x - \epsilon^T t && \text{(Model 2)} \\ \text{s.t.}:\ & Ax + By + Cz \geqslant e \\ & w \geqslant t \\ & t \leqslant y \\ & t \leqslant z \\ & x \in X,\ \ y \in Y,\ \ z \in Z,\ \ w \in W \end{aligned}$$

Model 2 seems better than Model 1 since it does not contain any binary variable and big-M constraint, so that we can expect to solve it more efficiently.

We can show theoretically that, under certain conditions, there exists ϵ such that Model 1 and Model 2 are equivalent, i.e., they have the same solution x even if the objectives are different. In practice, experiments on the TSCUC confirmed this observation. An approximate value (found by tuning) of weights in vector ϵ is enough. We conducted a few simulations to tune the value of the vector ϵ. With the same intuition presented in the example above, we linearized the complex nested min-max bounds of the transient stability constraints. We refer to the linearizations in Model 1 and Model 2 forms as the classic and new linearizations, respectively.

D. Solver's Tuning

An important aspect to highlight is the solver's setting used to solve the MILP problem. The default CPLEX setting was designed based on artificial instances in the literature, such as the ones from the MIPLIB library [20]. This default setting does not work well on real-life large-scale instances, such as the HQ's case. Thus, we conducted manual troubleshooting by exploring the log files of these instances, which highlights that few parameters impact the solver's effectiveness [21]. For the MILP problem tackled in this paper, these parameters are *emphasis*, *heuristic effort*, and *cutsfactor* [22]. Then, manual troubleshooting constructs an initial point. This configuration is provided to the irace tuner [23] to improve it.

Numerous large-scale optimization problems that arise in real life and need a large amount of time for testing can benefit from automatic configuration. When considering several problem instances, we should anticipate several hours of uninterrupted tuning. Therefore, the intuition is to cluster problem instances according to their polyhedral and business structures. After that, we tune a single instance from each cluster. This approach should result in reducing the time necessary to identify good configurations in comparison with the time required if all available instances are tuned simultaneously. This approach is more relevant when observing that commercial solvers are exact algorithms with similar behavior on similar problem instances.

In the literature, it is known that running the algorithm configuration using a representative is not always suitable. This is because when an algorithm works well in a set of instances, there might be other instances from the same cluster on which the same algorithm performs poorly and, on average, over the cluster [24]. This is the situation in rapidly changing environments where instances are subject to a lot of variations. At HQ, the first tests on the TSCUC problem highlight that the obtained configuration from tuning a given instance works for other instances from the same cluster. We explain this as follows. For the HQ case, the production process has long-term structures (e.g., generators, hydro plants), well-established processes (water flowing in/from hydro plants to generate power), and recurrent trends (winter season, summer season, etc.).

VI. Computational Study

We highlight in this section the matheuristic results in the worst-case, i.e. in instances that contain a large number of possible configurations. We also provide some business insights.

A. Test Plan

For our experiments, we consider two sets of real HQ instances, I^1 and I^2. Instances I^1 belong to the winter season, while instances I^2 belong to the summer season. Table III summarizes the characteristics of these instances: periods, variables, binaries, and constraints.

TABLE III
INSTANCES

Type	Instance	Horizon	Variables	Binaries	Constraints
$\mathbf{I^1}$	I_1^1	3	25728	4429	28397
	I_2^1	8	69401	11879	76078
	I_3^1	10	86867	14861	95150
	I_4^1	15	130367	22316	142756
	I_5^1	21	182699	31262	199942
	I_6^1	35	267335	12453	448087
		Avg	**127066**	**16200**	**165068**
$\mathbf{I^2}$	I_1^2	3	23664	4636	29409
	I_2^2	8	67206	12557	80069
	I_3^2	10	84604	15714	100326
	I_4^2	15	127986	23573	150922
	I_5^2	21	179736	32915	211288
	I_6^2	35	300602	54385	351914
		Avg	**157997**	**23963**	**153988**

TABLE IV
DEFAULT AND TUNED CPLEX RESULTS USING THE CLASSIC LINEARIZATION

		$\mathbf{MILP_1}$		$\mathbf{MILP_1^+}$	
Scenario	**Instances**	**Time**	**Gap(%)**	**Time**	**Gap(%)**
$\mathbf{I^1}$	I_1^1	324.96	0.00	58.75	0.00
	I_2^1	10800.00	100.00	77.88	0.00
	I_3^1	10800.00	100.00	91.42	0.00
	I_4^1	10800.00	100.00	10800.00	100.00
	I_5^1	10800.00	100.00	10800.00	100.00
	I_6^1	10800.00	100.00	10800.00	100.00
	Avg	**9054.16**	**83.33**	**5438.01**	**50.00**
$\mathbf{I^2}$	I_1^2	117.54	0.00	21.25	0.00
	I_2^2	10800.00	93.25	28.17	0.00
	I_3^2	10800.00	93.82	33.07	0.00
	I_4^2	10800.00	100.00	10800.00	100.00
	I_5^2	10800.00	100.00	10800.00	100.00
	I_6^2	10800.00	100.00	10800.00	100.00
	Avg	**9019.59**	**81.18**	**5413.75**	**50.00**

TABLE V
DEFAULT AND TUNED CPLEX RESULTS USING THE NEW LINEARIZATION

		$\mathbf{MILP_2}$		$\mathbf{MILP_2^+}$	
Scenario	**Instances**	**Time**	**Gap(%)**	**Time**	**Gap(%)**
$\mathbf{I^1}$	I_1^1	3.33	0.00	2.21	0.00
	I_2^1	23.71	0.00	15.74	0.00
	I_3^1	80.31	0.00	53.30	0.00
	I_4^1	606.52	0.00	81.59	0.00
	I_5^1	10800.00	0.03	453.05	0.58
	I_6^1	10800.00	100.00	5336.01	4.43
	Avg	**3718.98**	**16.67**	**990.32**	**0.84**
$\mathbf{I^2}$	I_1^2	6.17	0.00	3.89	0.00
	I_2^2	10.76	0.00	6.78	0.00
	I_3^2	59.50	0.00	37.51	0.00
	I_4^2	682.44	0.00	67.69	0.00
	I_5^2	3327.04	0.00	261.53	0.00
	I_6^2	10800.00	100.00	2234.76	1.44
	Avg	**2480.99**	**16.67**	**435.36**	**0.24**

We compare the following methods:

- $\mathbf{MILP_1}$: CPLEX under its default setting for the classic linearization.
- $\mathbf{MILP_1^+}$: CPLEX with a tuned setting for the classic linearization.
- $\mathbf{MILP_2}$: CPLEX under its default setting for the new linearization.
- $\mathbf{MILP_2^+}$: CPLEX with a tuned setting for the new linearization.
- $\mathbf{RSFC_1}$: $\mathcal{RSFC}$ matheurtistic with the default setting for the classic linearization.
- $\mathbf{RSFC_1^+}$: $\mathcal{RSFC}$ matheurtistic with a tuned setting for the classic linearization.
- $\mathbf{RSFC_2}$: $\mathcal{RSFC}$ matheurtistic with the default setting for the new linearization.
- $\mathbf{RSFC_2^+}$: $\mathcal{RSFC}$ matheurtistic with a tuned setting for the new linearization.

The matheuristic is coded using Python, and we used the commercial solver CPLEX version 20.1.0.0 to run experiments. We carry all tests on a machine Intel^R Core^{TM} i7-6700 processor, 3.40GHz, 64GiB System memory, and with a Linux operating system release 7.7. We measure runtime using real-time.

B. Numerical Results

We compare various methods by reporting the execution time (Time) in seconds and the optimality gap (Gap) in percentage. The time limit for each execution is 3 hours. When the method fails to reach a solution, we report a gap of 100% gap.

We compare in Table IV the default and tuned CPLEX results using the classic linearization. While the tuned CPLEX outperforms the default CPLEX on the small (few periods) instances, the default and tuned CPLEX cannot reach feasible solutions for large instances.

Table V shows the default and tuned CPLEX results using the new linearization. The new linearization outperforms the classic linearization. In particular, MILP_2^+ reaches a gap below 5% on several instances. The results also confirm the role of tuning in reaching better solutions quicker than the default CPLEX setting.

Table VI presents the matheuristic results using the classic linearization. Both the default and tuned settings do not significantly outperform the default and tuned CPLEX using the new linearization. Still, some instances are solved to optimality using the matheuristic.

Table VII shows the default and tuned matheuristic results using the new linearization. The results are significantly better, especially for large instances. Several instances are solved to optimality within less than 10 minutes.

The results confirm the following. First, for real problems that are more customized than instances from the literature, the CPLEX parameter tuning plays a significant role in reducing execution time and finding better solutions. Second, the linearization of the power stability constraints significantly impacts the execution time. While the classic linearization increases the number of binaries and big-M constraints, making the problem quite complex, the new linearization does not add any binary variable or big-M constraints. Thus, it makes the solving significantly quicker. Third, the matheuristic partially

TABLE VI
DEFAULT AND TUNED MATHEURISTIC RESULTS USING THE CLASSIC LINEARIZATION

Scenario	Instances	$\mathbf{RSFC_1}$		$\mathbf{RSFC_1^+}$	
		Time	**Gap(%)**	**Time**	**Gap(%)**
$\mathbf{I^1}$	I_1^1	6.70	0.00	3.15	0.00
	I_2^1	18.02	0.00	12.33	0.00
	I_3^1	76.34	0.00	53.35	0.00
	I_4^1	430.10	0.00	117.45	0.00
	I_5^1	2292.22	0.00	625.95	0.00
	I_6^1	18531.57	0.00	5367.77	0.00
	Avg	**3559.16**	**0.00**	**1030.00**	**0.00**
$\mathbf{I^2}$	I_1^2	4.89	0.00	3.22	0.00
	I_2^2	13.15	0.00	12.60	0.00
	I_3^2	55.72	0.00	54.54	0.00
	I_4^2	608.34	0.00	112.34	0.00
	I_5^2	2101.06	0.00	378.72	0.00
	I_6^2	13449.10	0.00	2649.54	0.00
	Avg	**2705.38**	**0.00**	**535.16**	**0.00**

TABLE VII
DEFAULT AND TUNED MATHEURISTIC RESULTS USING THE NEW LINEARIZATION

Scenario	Instances	$\mathbf{RSFC_2}$		$\mathbf{RSFC_2^+}$	
		Time	**Gap(%)**	**Time**	**Gap(%)**
$\mathbf{I^1}$	I_1^1	5.39	0.00	2.68	0.00
	I_2^1	33.45	0.00	13.71	0.00
	I_3^1	49.36	0.00	35.88	0.00
	I_4^1	538.60	0.00	79.77	0.00
	I_5^1	844.85	0.00	366.48	0.00
	I_6^1	1299.71	0.00	177.05	0.00
	Avg	**461.89**	**0.00**	**177.05**	**0.00**
$\mathbf{I^2}$	I_1^2	6.61	0.00	6.55	0.00
	I_2^2	41.02	0.00	15.96	0.00
	I_3^2	60.53	0.00	41.77	0.00
	I_4^2	450.02	0.00	55.02	0.00
	I_5^2	705.90	0.00	322.07	0.00
	I_6^2	1085.95	0.00	495.47	0.00
	Avg	**391.67**	**0.00**	**155.57**	**0.00**

and smartly decomposes the problem, thus allowing another gain in the execution time. All these features combined allow tackling almost all instances optimally in less than 10 minutes.

C. Business Insights

From a business view, rapid optimization strengthens HQ planning skills and facilitates stakeholder decision-making. Specifically, the rapid execution enables the rapid recovery from disruptions and interruptions as well as the simulation of various what-if scenarios. Consequently, this makes the matheuristic an effective decision-support tool that can be used to verify, regulate, model, and re-optimize the production of power. The company's new management guidelines were established as a result of the mathematical optimization solution, which improves operations and power production planning. In summary, HQ can handle the future more resiliently and effectively manage its water resources due to the swift solving of the TSCUC.

The designed approach is generic and scalable to real world large-scale optimization problems. This approach consists of mathematically formulating the problem (modeling), conducting a model analysis (diagnostic) of complexity sources, and then developing a decomposition matheuristic (prescriptions) that tackles the problem effectively.

VII. CONCLUSION

This work not only effectively tackles the TSCUC problem at HQ but also gives general ideas applicable to other large-scale optimization problems. After the TSCUC model is presented, the TSCUC analysis shows that the main sources of the problem's complexity are the transient stability restrictions and the binaries controlling the groups' actions. We implement the $\mathcal{RSFC}$ matheuristic where the decomposition criterion is time. This decomposition improves the solution quality while reducing the execution time in comparison to CPLEX. In less than ten minutes, satisfactory and practical solutions can be obtained. Additionally, the offered solution facilitates decision-making inside the organization and improves HQ's planning skills.

REFERENCES

[1] A. Besner et al., "Generation planning and operation under power stability constraints: A hydro-quebec use case," *IEEE Trans. Power Syst.*, vol. 40, no. 5, pp. 4006–4018, Sep. 2025, doi: 10.1109/TPWRS.2025.3528864.

[2] M. Anjos, A. Conejo, and N. Publishers, "Unit commitment in electric energy systems," in *Foundations and Trends in Electric Energy Systems*, Norwell, MA, USA: Now Publishers, Inc., 2017, vol. 1, no. 4, pp. 220–310.

[3] M. Musto, "Day ahead network constrained unit commitment performance," in *Proc. 11th Annu. FERC Softw. Conf.*, Washington, DC, USA, Jun., 2020. [Online]. Available: https://www.ferc.gov/sites/default/files/2020-06/T2-2_Musto_0.pdf

[4] H. Hui, "Reliability unit commitment in ERCOT nodal market," Ph.D. dissertation, Dept. Elect. Eng., Univ. Texas at Arlington, Arlington, TX, USA, 2013.

[5] J. A. Huang, L. Loud, G. Vanier, B. Lambert, and S. Guillon, "Experiences and challenges in contingency analysis at hydro-quebec," in *Proc. 2012 IEEE Power Energy Soc. Gen. Meeting*, 2012, pp. 1–9.

[6] T. M. Burks and K. Sakallah, "Min-max linear programming and the timing analysis of digital circuits," in *Proc. 1993 Int. Conf. Comput. Aided Des.*, 1993, pp. 152–155.

[7] N. Yang et al., "A comprehensive review of security-constrained unit commitment," *J. Modern Power Syst. Clean Energy*, vol. 10, no. 3, pp. 562–576, 2021.

[8] L. Montero, A. Bello, and J. Reneses, "A review on the unit commitment problem: Approaches, techniques, and resolution methods," *Energies*, vol. 15, no. 4, 2022, Art. no. 1296.

[9] L. Wu, M. Shahidehpour, and T. Li, "Stochastic security-constrained unit commitment," *IEEE Trans. Power Syst.*, vol. 22, no. 2, pp. 800–811, May 2007.

[10] Y. Fu, M. Shahidehpour, and Z. Li, "Security-constrained unit commitment with AC constraints," *IEEE Trans. Power Syst.*, vol. 20, no. 2, pp. 1001–1013, May 2005.

[11] Y. Fu, Z. Li, and L. Wu, "Modeling and solution of the large-scale security-constrained unit commitment," *IEEE Trans. Power Syst.*, vol. 28, no. 4, pp. 3524–3533, Nov. 2013.

[12] Y. Chen, A. Casto, F. Wang, Q. Wang, X. Wang, and J. Wan, "Improving large scale day-ahead security constrained unit commitment performance," *IEEE Trans. Power Syst.*, vol. 31, no. 6, pp. 4732–4743, Nov. 2016.

[13] J. Wang, M. Shahidehpour, and Z. Li, "Security-constrained unit commitment with volatile wind power generation," *IEEE Trans. Power Syst.*, vol. 23, no. 3, pp. 1319–1327, Aug. 2008.

[14] G. E. Constante-Flores and A. J. Conejo, "Security-constrained unit commitment: A decomposition approach embodying kron reduction," *Eur. J. Oper. Res.*, vol. 319, no. 2, pp. 427–441, 2024.

[15] A. Nasri, S. J. Kazempour, A. J. Conejo, and M. Ghandhari, "Network-constrained AC unit commitment under uncertainty: A benders' decomposition approach," *IEEE Trans. Power Syst.*, vol. 31, no. 1, pp. 412–422, Jan. 2016.

[16] D. Bertsimas, E. Litvinov, X. A. Sun, J. Zhao, and T. Zheng, "Adaptive robust optimization for the security constrained unit commitment problem," *IEEE Trans. Power Syst.*, vol. 28, no. 1, pp. 52–63, Feb. 2013.

[17] R. Ginocchio and P.-L. Viollet, *L'énergie Hydraulique*. Paris, France: Lavoisier, 2012.

[18] A. Borghetti, C. D'Ambrosio, A. Lodi, and S. Martello, "An MILP approach for short-term hydro scheduling and unit commitment with head-dependent reservoir," *IEEE Trans. Power Syst.*, vol. 23, no. 3, pp. 1115–1124, Aug. 2008.

[19] E. M. Er Raqabi, I. Himmich, N. El Hachemi, I. El Hallaoui, and F. Soumis, "Incremental LNS framework for integrated production, inventory, and vessel scheduling: Application to a global supply chain," *Omega*, vol. 116, 2023, Art. no. 102821.

[20] A. Gleixner et al., "MIPLIB 2017: Data-driven compilation of the 6th mixed-integer programming library," *Math. Program. Computation*, vol. 13, no. 3, pp. 443–490, 2021.

[21] I. Himmich, E. M. Er Raqabi, N. El Hachemi, I. El Hallaoui, A. Metrane, and F. Soumis, "MPILS: An automatic tuner for MILP solvers," *Comput. Operations Res.*, vol. 159, 2023, Art. no. 106344.

[22] IBM ILOG CPLEX, "V12.1: User's manual for CPLEX," *Int. Bus. Mach. Corporation*, vol. 46, no. 53, 2009, Art. no. 157.

[23] M. López-Ibáñez, J. Dubois-Lacoste, L. P. Cáceres, M. Birattari, and T. Stützle, "The Irace package: Iterated racing for automatic algorithm configuration," *Operations Res. Perspectives*, vol. 3, pp. 43–58, 2016.

[24] M. Birattari and J. Kacprzyk, *Tuning Metaheuristics: A Machine Learning Perspective*, vol. 197. Berlin, Germany: Springer, 2009.