Economic Dispatch Problem Solution via Holomorphic Embedding Method on IEEE 14-Bus System for Different Loading Scenarios

Ana Catarina Salles Ramos, Francisco Damasceno Freitas, and Gaetano Zizzo

***Abstract*—This paper presents an approach for solving the Economic Dispatch Problem (EDP) in power systems considering transmission losses in a recursive manner via a Holomorphic Embedding Method (HEM) applied to the IEEE 14 Bus system and tested for different loading scenarios. The HEM methodology has been proposed recently in power system to solve the power flow problem. The technique was adapted in this work for solving directly the nonlinear equation system that arises when the EDP lossy optimization problem is formulated. In order to validate the method three different loading scenarios were created to observe the method's response to systems with a diverse computational and mathematical demand. In order to demonstrate the efficacy of the approach, experiments are carried out employing the Matlab platform. The performance of the proposed technique is evaluated by using the classical Newton-Raphson (NR) method. The methodology presents similar results compared to the NR method, however having higher performance when compared in terms of convergence.**

***Index Terms*—Economic dispatch problem, holomorphic embedding model, lossy transmission system, nonlinear system, optimization.**

Nomenclature

N_b	number of buses in the system.
N_g	number of power generation buses.
N_{gi}	number of generator units at bus i.
P_{ij}	power output of the unit j connected to bus i.
H_{ij}	thermal curve, associated to the generation of unit j connected to bus i, formed by the coefficients H_{1ij}, H_{2ij} and H_{3ij}.
c_{ij}	cost of the type of fuel consumed by the unit j connected to bus i.
$\mathcal{F}$	objective function composed of individual fuel cost functions $\mathcal{F}_{ij}$.
Φ_{im}	active power flow from the bus i to m.
$\mathcal{L}$	Lagrangean function.
L_i	load connected to bus i.
λ_k	marginal cost associated to bus k.
$\overline{\pi}_{ij}$	slack variable associated to the upper limit violation of P_{ij}.
$\underline{\pi}_{ij}$	slack variable associated to the lower limit violation of P_{ij}.
R_k	residue (mismatch) associated to equation k.
Π	set of generation units whose operational limits are violated.
Ω_k	set of buses that has connection at the bus k.
α	holomorphic parameter.
b_{km}	line susceptance between buses k and m.
θ_i	voltage phase at bus i.
g_{km}	line conductance between buses k and m.

Manuscript received 2 June 2023; revised 18 August 2023 and 23 October 2023; accepted 30 November 2023. Date of publication 19 December 2023; date of current version 21 March 2024. Paper 2023-PSEC-0728.R2, presented at the 2022 IEEE 21st Mediterranean Electrotechnical Conference, Palermo, Italy, Jun. 14–16, and approved for publication in the IEEE Transactions on Industry Applications by the Power Systems Engineering Committee of the IEEE Industry Applications Society [DOI: 10.1109/MELECON53508.2022.9842977] *(Corresponding author: Ana Catarina Salles Ramos.)*

Ana Catarina Salles Ramos and Gaetano Zizzo are with the University of Palermo, 90133 Palermo, Italy (e-mail: anasalles.df@gmail.com; gaetano.zizzo@unipa.it).

Francisco Damasceno Freitas is with the University of Brasilia, Brasília 70910-900, Brazil (e-mail: ffreitas@ene.unb.br).

Color versions of one or more figures in this article are available at https://doi.org/10.1109/TIA.2023.3344694.

Digital Object Identifier 10.1109/TIA.2023.3344694

I. Introduction

With he development of renewable energy sources and distributed generation, the power systems field has undergone significant changes. Nonetheless, the Economic Dispatch Problem (EDP) is still an important field of study. Transmission System Operators (TSOs), Distribution System Operator (DSOs) and any other entity, like Virtual Power Plants (VPP) operating in the energy market must solve this problem on an hourly basis. Therefore, any advances in the problem formulation or solution [2] results in advantages for the Power System operation worldwide.

The EDP can vary drastically concerning modelling, for instance if a small time interval is considered for a loop solution the Dynamic Economic Dispatch (DEDP) is defined, when the transmisson losses are negletected or modelled linearly the problem will be linear. Contingency and prediction can also be incorporated in the EDP [3]. This wild range of modelling enables the usage of many methods varying from traditional ones like Interior Points Method [4] or Primal-dual Sub-gradient [5], to Heuristic ones like Particle Swarm Optimization [6] or Genetic Algorithms [7] and also to Hybrid ones such as [8] were proposed for solving the EDP and DEDP. Even models based on machine learning and probabilistic prediction like [9] are also used. However, each technique and formulation has its pros

0093-9994 © 2023 IEEE. Personal use is permitted, but republication/redistribution requires IEEE permission.
See https://www.ieee.org/publications/rights/index.html for more information.

Authorized licensed use limited to: CHONGQING UNIVERSITY. Downloaded on February 09,2026 at 09:07:52 UTC from IEEE Xplore. Restrictions apply.

and cons. The challenge is to employ an adequate method to determine the optimal solution for the problem.

On the past years the Holomorphic Embedding Method (HEM) was proposed and it is being tested as a solution method for several nonlinear systems such as the ones arising in the power flow problem [10] or the EDP [1]. This article is as an extesion of the previously cited work [1] and its purpose is to test the HEM on different scenarios for robustness and suitability assessment. By the HEM methodology, a set of nonlinear equations are embedded as a function of a scaling factor in such way that the result of interest occurs when the scaling factor is adjusted to the unitary value. The solution of the problem is determined in two main steps: firstly, it is computed a finite MacLauren's power series of the variable of the nonlinear system as a function of the scaling factor. In the sequence, the power series is converted to into a rational fraction called Padé approximant. There are many ways to embed the problem and obtain the solution of the nonlinear system by applying the HEM. In [10], it is calculated a power series, in general with an elevated number of coefficients. The elevated polynomial orders generate very high coefficient values, which requires an improvement in terms of accuracy for handling such coefficients. In [11], the problem of elevated order for the power series was circumvented through a strategy that takes into account an initial guess and a restart process.

This work proposes to represent the EDP in such way that its solution is determined by a HEM. The classical EDP is formulated including the losses in the transmission system. The nonlinear equations determined from the optimal conditions and operational constraints are embedded to form the base problem to be solved. In the modeling for the formulation of the EDP, all generators are of the thermal type with a heat curve represented by a quadratic polynomial, as adopted in the classical EDP [5]. Each generating plant can be represented by generators with different aspects that characterize its heat, cost and fuel. Thus each generation bus can have more than one type of generating unit. The interconnection network composing the transmission system is represented by transmission lines whose losses are quadratic functions of the angular voltage difference between two buses. System's operational constraints are assumed to each thermal unit, considering its operational power generation limits.

The decision to study the usage of HEM on the EDP aims to improve the speed and precison of the solution in comparison with traditional/recursive methods. Therefore, besides the HEM applied to the EDP, the problem is also solved by using the classical Newton-Raphson method. Experiments were carried out for different loading scenarios using the IEEE 14-bus system, on a Matlab platform. The results are compared with the solution obtained from the Newton-Raphson method to check the accuracy of the proposed method.

The paper is organized as follows: Section II presents the EDP formulation and the characterization on the optimization problem applied to the EDP. Section III describes how the HEM was adapted to solve the EDP, while in Section IV are presented experiments and results obtained by the scheme proposed in this paper. Section V highlights the conclusions. On the Apendix more data about the system characteristcs can be found.

II. Multibus Economic Dispatch Problem

The main purpose of an EDP is provide a basis to allow the dispatch of generation units in a power system. The scheduling must take into account the costs of each generating unit in order to obtain the lowest possible cost, while considering all electrical restrictions of the system.

The energy production cost is associated not only to the fuel price of the thermal units, but also to its characteristics and other aspects. The machines are all inserted into an electrical system with a complex topology that must satisfy at the same time the Kirchhoff's laws, the system power balance equations and any operational constrains for the generators.

Accounting for the problem's characteristics, the first step is to determine the cost by power output. It is assumed that the system model is multiterminal and composed of N_b buses, of which the number of generation buses is $N_g \leq N_b$. A generation bus i is connected to j thermal units. This way, the output power of each unit j at the bus i is denoted by P_{ij}. For each thermal unit, there is a quadratic heat curve correlated to it, H_{ij}, which is a function of three parameters, i.e, $H_{ij} = H_{1ij}P_{ij}^2 + H_{2ij}P_{ij} + H_{3ij}$ [12]. For every unit is also associated a type of fuel, whose price is c_{ij}. The cost to generate the output power P_{ij} is $\mathcal{F}_{ij} = c_{ij}H_{ij}$ (All these parameters/coefficients can be found in the Appendix).

The main interest in the economic dispatch problem is to minimize the costs for generating the total power generated by the thermal units. The total costs are computed as

$$\mathcal{F} = \sum_{i=1}^{N_g}\sum_{j=1}^{N_{gi}} \mathcal{F}_{ij} \tag{1}$$

where $\mathcal{F}$ is called the Objective Function and N_{gi} is the number of generation units connected at bus i.

The interconnected system involves a transmission system. However, other aspects are intrinsic, such as the topology of the electrical network, systems requirements, prohibited operational set ups, etc. This work considers for modeling purpose the following aspects:

- Multiple generating units per bus;
- Load represented only by active power and lumped at each bus;
- Transmission losses modeled by quadratic functions;
- Operational limits (max and min) for the thermal units;
- Dual function per bus, i.e. generation and load at the same bus;
- No prohibited operating points.

The active transmission losses P_{losses}^{im} for an interconnection between buses i and m can be computed as the sum $\Phi_{im} + \Phi_{mi}$, where Φ_{im} is the active power flow from the bus i to m and Φ_{mi} is the active power flow from the bus m to i.

The power flow from i to m is approximated by:

$$\Phi_{im} = -b_{im}\theta_{im} + \frac{g_{im}\theta_{im}^2}{2},\ i = 1, \ldots, N_b, m \neq i \tag{2}$$

where $\theta_{im} = \theta_i - \theta_m$, being θ_i the voltage phase at bus i and $y_{im} = g_{im} + jb_{im}$ the longitudinal admittance connecting the buses $i - m$.

Authorized licensed use limited to: CHONGQING UNIVERSITY. Downloaded on February 09,2026 at 09:07:52 UTC from IEEE Xplore. Restrictions apply.

Therefore, from (2) the losses at the interconnection $i-m$ are $P_{losses}^{im} = g_{im}\theta_{im}^2$.

A. Operational Constraints

This paper has considered as restrictions both equality and inequality constraints. The first restriction arises from the power balance equation at each bus i of the system, regardless of being characterized by generation, load or both. The injected power into bus i must match its output power:

$$\sum_{j=1}^{N_{gi}} P_{ij} = \left[\sum_{m\in\Omega_i} \Phi_{im}\right] + L_i \tag{3}$$

where L_i is the lumped load connected at the bus i and Ω_i is the set of buses which have connections to bus i. $P_{ij}=0$, $j=1,\ldots,N_{gi}$, case no generation exists in the bus.

The other restriction originates from the upper and lower thermal machines operational limits. The power output for each unit, P_{ij}, must not be greater than the unit's upper limit ($\overline{P}_{ij}$) or lower than the unit's lower limit ($\underline{P}_{ij}$)

$$\underline{P}_{ij} \le P_{ij} \le \overline{P}_{ij} \tag{4}$$

or equivalently as two inequalities with one constraint

$$\underline{P}_{ij} - P_{ij} \ or \ P_{ij} - \overline{P}_{ij} \le 0 \tag{5}$$

B. Lagrangean Function Definition

On account of this being a minimization problem with restrictions, its solution is determined operating on a Lagrangian fuction $\mathcal{L}$. The Lagrangian is formulated using the $\mathcal{F}$ as the main function and the equalities and inequalities constraints as the incremental functions:

$$\mathcal{L} = \sum_{i=1}^{N_g}\sum_{j=1}^{N_{gi}} \mathcal{F}_{ij} - \sum_{k=1}^{N_b} \lambda_k \left\{ \sum_{j=1}^{N_{gk}} P_{kj} - L_k - \sum_{m\in\Omega_k} \Phi_{km} \right\} + \sum_{j=1}^{N_{gi}} \left[\overline{\pi}_{kj}(P_{kj} - \overline{P}_{kj}) + \underline{\pi}_{kj}(\underline{P}_{kj} - P_{kj})\right] \tag{6}$$

where $\overline{\pi}_{kj}$ and $\underline{\pi}_{kj}$ are slack variables associated to the upper and lower limits, respectively, of the inequalities in (5).

The minimization of the costs is achieved by enforcing the Karush-Kuhn-Tucker (KKT) conditions in the Lagrangian function $\mathcal{L}$ for the variables of interest, P_{ij}, $i=1,\ldots,N_g$; $j=1,\ldots,N_{gi}$; λ_k, $k=1,\ldots,N_b$; θ_m, $m=2,\ldots,N_b$; $\overline{\pi}_{ij}$, $\underline{\pi}_{ij}$, $i=1,\ldots,N_g$, $j=1,\ldots,N_{gi}$. It is assumed that the bus 1 is the reference and therefore $\theta_1=0$.

Expression (6) forms a nonlinear system composed of four main sets of equations. The ones originated from the partial derivative in relation to P_{ij}, producing (7), in case of no limits violations; or (8), in case of limit violation. The second block of equations is originated from the partial derivative in relation to λ_k (9). The third set is one originated from the partial derivative in relation to θ_m (10), and finally the ones originated from the partial derivative with respect to $\overline{\pi}_k$ and $\underline{\pi}_k$ (see (11)).

$$2c_{ij}H_{1ij}P_{ij} + c_{ij}H_{2ij} - \lambda_i = 0,\ i=1,\ldots,N_g;\ j=1,\ldots,N_{gi} \tag{7}$$

$$2c_{ij}H_{1ij}P_{ij} + c_{ij}H_{2ij} - \lambda_i + \overline{\pi}_{ij} - \underline{\pi}_{ij} = 0,\ i=1,\ldots,N_g;\ j=1,\ldots,N_{gi} \tag{8}$$

$$\sum_{j=1}^{N_{gk}} P_{kj} - \sum_{m\in\Omega_k}\left(-b_{km}\theta_{km} + \frac{g_{km}\theta_{km}^2}{2}\right) - L_k = 0,\ k=1,\ldots,N_b \tag{9}$$

$$\lambda_k \sum_{m\in\Omega_k}(-b_{km} + g_{km}\theta_{km}) + \sum_{k\in\Omega_m}\lambda_m(b_{mk} - g_{mk}\theta_{mk}) = 0,\quad k=2,\ldots,N_b \tag{10}$$

$$\underline{P}_{ij} - P_{ij} = 0 \ \ or\ P_{ij} - \overline{P}_{ij} = 0,\quad i=1,\ldots,N_g;\ j=1,\ldots,N_{gi} \tag{11}$$

The set of (7)–(11) constitutes the basic nonlinear (quadratic) system that characterizes the optimal EDP solution (considereing the KKT conditions for the determination of the optimal solution associated to the Lagrangean function $\mathcal{L}$). The lossless EDP is established for (7)–(11) by assigning $g_{km}=0$. In this case it is needed to solve only a linear system.

III. Holomorphic Embedding Method Applied to the EDP

The HEM can be formulated of many different forms. Even though constrained to solving the equations set, the HEM still changes significantly since there are an inexhaustible number of manners for the holomorphic embedding of the equations. The one used in this work for solving the EDP, was called as HEM-based EDP.

A. The Problem Formulation

The holomorphic embedding model was defined based on the expressions (7)–(11). The idea is to introduce the value of mismatches (residue) of these expression at the right-hand side (RHS) of all expressions, for the indexes i,j,k,m as defined in (7)–(11). Then, modulate it with the term $(1-\alpha)$, where α is the scaling factor for embedding the system equations. It is expected that for $\alpha=1$ and at the optimal solution ($P_{ij}^{(*)}$, $\lambda_k^{(*)}$, $\theta_m^{(*)}$, $\overline{\pi}_{ij}^{(*)}$, $\underline{\pi}_{ij}^{(*)}$), the RHS be zero. Moreover, the mismatches of the expressions in (7)–(11) be smaller than a tolerance $\epsilon>0$, sufficiently small.

Let $R=[R_1^T,\ R_2^T,\ R_3^T,\ R_4^T]^T$ be the mismatch vector related to the four blocks defined by the (7)–(11), being each block with appropriated dimension.

The embedding equations are arranged as:

$$2c_{ij}H_{1ij}P_{ij} + c_{ij}H_{2ij} - \lambda_i + \overline{\pi}_{ij} - \underline{\pi}_{ij} = R_{1\ell}\cdot(1-\alpha),\quad \ell = 1,\ldots,N_g\cdot N_{gi} \tag{12}$$

Authorized licensed use limited to: CHONGQING UNIVERSITY. Downloaded on February 09,2026 at 09:07:52 UTC from IEEE Xplore. Restrictions apply.

$$\sum_{j=1}^{N_{gk}} P_{kj} - \sum_{m\in\Omega_k}\left(-b_{km}\theta_{km} + \frac{g_{km}\theta_{km}^2}{2}\right) - L_k = R_{2k}\cdot(1-\alpha),$$
$$k = 1,\ldots,N_b \tag{13}$$

$$\lambda_k \sum_{m\in\Omega_k}(-b_{km} + g_{km}\theta_{km}) + \sum_{k\in\Omega_m}\lambda_m(b_{mk} - g_{mk}\theta_{mk}) =$$
$$= R_{3k}\cdot(1-\alpha),\ k = 2,\ldots,N_b \tag{14}$$

Each term of mismatch is computed for the (7)–(11) considering the estimates $P_{ij}^{(0)}$, $\overline{\pi}_{ij}^{(0)}$, $\underline{\pi}_{ij}^{(0)}$ $\lambda_k^{(0)}$ and $\theta_m^{(0)}$. The elements of the vector R_4 are all zero, because they are related to (11). In this case, P_{ij} assume the known value $\overline{P}_{ij}$ or $\underline{P}_{ij}$. Then, the inequality equations were removed on the embedding model. Therefore, for this condition P_{ij} and its associated slack variable are known, i.e. they are not unknown for the HEM problem.

The goal when choosing how to embed an equation is to insert a holomorphic parameter α in a way that, when the parameter is set to the unit value, the numerical original equation system is recovered. Another important result is verified when the same parameter is set to zero. The result in this case is known as *germ solution* [10].

The system variables are now a function of the scaling factor α, i.e., $P_{ij}(\alpha)$, $\lambda_k(\alpha)$ and $\theta_m(\alpha)$. These variables are approximated by truncated MacLauren series as (15)–(17). The initial coefficients for the variables $(P_{ij}[0], \lambda_k[0], \theta_m[0])$ are the *germ solution*. Here the generic notation $x[\cdot]$ stands for a MacLauren's scalar coefficient.

$$P_{ij}(\alpha) = P_{ij}[0] + P_{ij}[1]\alpha + P_{ij}[2]\alpha^2 + P_{ij}[3]\alpha^3 + \cdots \tag{15}$$
$$\lambda_k(\alpha) = \lambda_k[0] + \lambda_k[1]\alpha + \lambda_k[2]\alpha^2 + \lambda_k[3]\alpha^3 + \cdots \tag{16}$$
$$\theta_m(\alpha) = \theta_m[0] + \theta_m[1]\alpha + \theta_m[2]\alpha^2 + \theta_m[3]\alpha^3 + \cdots \tag{17}$$

Except for the germ solution, the MacLauren's series coefficients are calculated in a recursive manner. Each coefficient is calculated by solving a linear equation system formed according to the degree n. The coefficients for the case $n = 0$ are the *germ solution*. Thus, the coefficients are recursively calculated for the remaining values for $n = 1,\ldots,m$. The highest degree m depends on the approach defined by the user and the desired accuracy.

B. MacLaurin Series Coefficient Calculation

The optimal problem computation is started with the determination of estimates $P_{ij}^{(0)}$, $\lambda_k^{(0)}$ and $\theta_m^{(0)}$, for all indexes i, j, k and m defined in (7)–(11). This guess is influenced by the slack variables $\overline{\pi}_{ij}$ and $\underline{\pi}_{ij}$, since these variables are computed iteratively by considering another computational loop, as will be referred to in the Section III-D and Algorithm 1.

The initial estimates for the variables are determined as the solution of the lossless transmission system EDP (see (7)–(11) for the case $g_{km} = 0$) and assuming free operational limits ($\overline{\pi} = \underline{\pi} = 0$).

For $n = 1$, it is needed to match the terms with degree 1 for α in both sides of (12)–(14), assuming that all residues R_i were calculated. Then, the following equations of a linear system are determined by identification:

$$2c_{ij}H_{1ij}P_{ij}[1] - \lambda_i[1] = -R_{1\ell},\ \ell = 1,\ldots,N_g\cdot N_{gi}$$
$$i = 1,\ldots,N_g;\ j = 1,\ldots,N_{gi},\ (i,j)\notin\Pi \tag{18}$$

where Π is the set of units with violated operational limits

$$\sum_{j=1,(k,j)\notin\Pi}^{N_{gk}} P_{kj}[1] - \sum_{m\in\Omega_k}(-b_{km}\theta_{km}[1] + g_{km}\theta_{km}[1]\theta_{km}[0])$$
$$= -R_{2k},\ k = 1,\ldots,N_b \tag{19}$$

$$\lambda_k[1]\sum_{m\in\Omega_k}(-b_{km} + g_{km}\theta_{km}[0]) + \lambda_k[0]\sum_{m\in\Omega_k}(g_{km}\theta_{km}[1])$$
$$+\sum_{k\in\Omega_m}\lambda_m[1](b_{mk} - g_{mk}\theta_{mk}[0]) - \sum_{k\in\Omega_m}\lambda_m[0]g_{mk}\theta_{mk}[1]$$
$$= -R_{3k},\ k = 2,\ldots,N_b \tag{20}$$

For the linear (18)–(20) the unknows are $P_{ij}[1] \vee (i,j)\notin\Pi$, $\lambda_k[1]$ and $\theta_m[1]$, where $\theta_{km} = \theta_k - \theta_m$ must be separated in θ_k and θ_m in order to solve the linear system.

For $n = 2$, the nonzero terms at the RHS vanish, since the coefficients of terms whose degrees are greater than 1 in the right side of (12)–(14) are all zeros. The linear equation system for $n = 2$ are:

$$2c_{ij}H_{1ij}P_{ij}[2] - \lambda_i[2] = 0,\ i = 1,\ldots,N_g;$$
$$j = 1,\ldots,N_{gi},\ (i,j)\notin\Pi \tag{21}$$

$$\sum_{j=1,(i,j)\notin\Pi}^{N_{gk}} P_{kj}[2] - \sum_{m\in\Omega_k}(-b_{km}\theta_{km}[2] + g_{km}\theta_{km}[2]\theta_{km}[0])$$
$$+\gamma_k = 0,\ k = 1,\ldots,N_b \tag{22}$$

$$\lambda_k[2]\sum_{m\in\Omega_k}(-b_{km} + g_{km}\theta_{km}[0]) + \lambda_k[0]\sum_{m\in\Omega_k}(g_{km}\theta_{km}[2])$$
$$+\sum_{k\in\Omega_m}\lambda_m[2](b_{mk} - g_{mk}\theta_{mk}[0]) - \sum_{k\in\Omega_m}\lambda_m[0]g_{mk}\theta_{mk}[2]$$
$$+\rho_k = 0,\ k = 2,\ldots,N_b \tag{23}$$

where

$$\gamma_k = -\sum_{m\in\Omega_k}\frac{g_{km}}{2}\theta_{km}[1]^2$$

$$\rho_k = \lambda_k[1]\sum_{m\in\Omega_k} g_{km}\theta_{km}[1] - \sum_{k\in\Omega_m}\lambda_m[1]g_{mk}\theta_{mk}[1]$$

Note that the linear systems in (18)–(20) and (21)–(23) have the same expression at the left hand side and the coefficient matrix of the linear system is exactly equal to the Jacobian matrix of the nonlinear equation system formed by (7)–(11). This is justified due to the form how the holomorphic problem was embedded taking into account the residues of the nonlinear system. Therefore, the linear systems in (18)–(20) and (21)–(23)

Authorized licensed use limited to: CHONGQING UNIVERSITY. Downloaded on February 09,2026 at 09:07:52 UTC from IEEE Xplore. Restrictions apply.

differ only by the terms γ_k and ρ_k. For the linear system (18)–(20), γ_k and ρ_k are equal to the own residues.

Thus, the extension of the computations of the coefficients for $n > 2$ consists basically in computing γ_k and ρ_k. The linear system involved in the coefficient calculation process requires only the LU factorization for computing the coefficients for $n = 1$. Since on this work the restarted approach for the HEM was used, there is a cap on the MacLaurin series degree as explicited on steps 2 and 6 of Algorithm 1. For this work the maximum order for the MacLaurin series coefficents was $m = 8$.

C. Padé Approximant

The coefficients calculated for the MacLaurin series are them used for obtaining a Padé expansion. This approximation is used for expanding the convergence radius of the solution [10]. Then,

$$P_{ij} = P_{ij}[0] + P_{ij}[1]\alpha + P_{ij}[2]\alpha^2 + \cdots = \frac{a_{Pij}[0] + a_{Pij}[1]\alpha + a_{Pij}[2]\alpha^2 + \cdots}{1 + b_{Pij}[1]\alpha + b_{Pij}[2]\alpha^2 + \cdots} \quad (24)$$

$$\lambda_k = \lambda_k[0] + \lambda_k[1]\alpha + \lambda_k[2]\alpha^2 + \cdots = \frac{a_{\lambda k}[0] + a_{\lambda k}[1]\alpha + a_{\lambda k}[2]\alpha^2 + \cdots}{1 + b_{\lambda k}[1]\alpha + b_{\lambda k}[2]\alpha^2 + \cdots} \quad (25)$$

$$\theta_m = \theta_m[0] + \theta_m[1]\alpha + \theta_m[2]\alpha^2 + \cdots = \frac{a_{\theta m}[0] + a_{\theta m}[1]\alpha + a_{\theta m}[2]\alpha^2 + \cdots}{1 + b_{\theta m}[1]\alpha + b_{\theta m}[2]\alpha^2 + \cdots} \quad (26)$$

In (24)–(26), the parameters a_{Pij}, b_{Pij}, $a_{\lambda k}$, $b_{\lambda k}$, $a_{\theta m}$ and $b_{\theta m}$ must be determined accordingly to the Padé identification technique [10]. Once calculated the Padé rational fractions, the HEM-based EDP solution is obtained by setting the scaling factor α to unit.

D. HEM-Based EDP Solution Through a Restarted Process

The objective of this paper is to solve the optimization problem taking into account the equality and inequality constraints imposed on the problem. Regarding the inequality variables, their treatment is done as follows. It can be considered an external loop where the inequality limits are met. And, internally to this loop there is a computational procedure where the *calculations with the holomorphic embedded functions occurs*. In this internal calculation, the slack variables and the output power of generation units set in the limits are kept constant.

The holomorphic embedding method adopted in this work uses a restarted strategy proposed in [11] for solving a power flow problem. By this approach, a reduced order for the MacLauren's series is determined. Thus, a reduced order for the polynomials of the Padé fraction is also calculated. This variable result for $\alpha = 1$ is not sufficient to reach a required tolerance for the solution of the HEM at all. Then, the last numerical Padé approximant is set as new estimate ($P_{ij}^{(0)}$, $\lambda_k^{(0)}$, $\theta_m^{(0)}$) and the HEM computations are restarted. The process is restarted until convergence or solution stagnation is detected. For each restart, an updated residue $R = [R_1, R_2, \ldots, R_\ell]^T$, $\ell = (N_g \cdot N_{gi} + 2N_b - 1)$ must be calculated. This value is also adopted as the criteria for halting the computations when $||R||_\infty \leq \epsilon$, where ϵ is the tolerance.

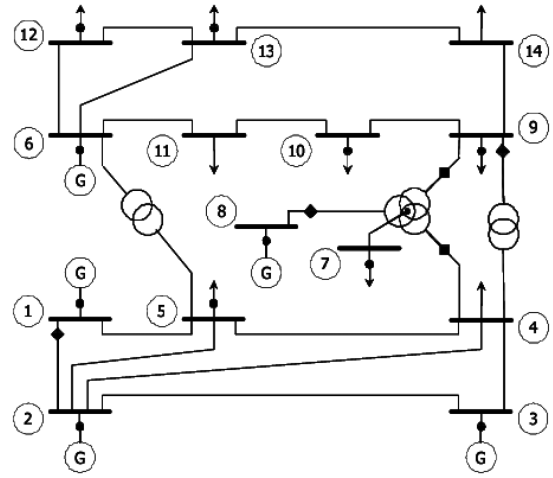

Fig. 1. IEEE 14-bus diagram [14].

Algorithm 1: Restarted HEM-Based EDP Procedure.

Require: $P_{ij}^{(0)}$, $\lambda_k^{(0)}$, $\theta_m^{(0)}$, R, network data, fuel costs and heat curve of each generation unit, ϵ.
Ensure: Converged value for P_{ij}, λ_k, θ_m.
1: Start with the germ solution ($P_{ij}^{(0)}$, $\lambda_k^{(0)}$, $\theta_m^{(0)}$), $\epsilon = 10^{-8}$.
2: Compute the power series coefficents until a maximum order m;
3: Compute the Padé approximant to the power series and calculate the value of the variables $P_{ij}(\alpha)$, $\lambda_k(\alpha)$, $\theta_m(\alpha)$ at $\alpha = 1$ and calculate the mismatch R;
4: **while** ($||R||_\infty > \epsilon$) **do**
5: initiate a restart taking as germ solution the values $P_{ij}(\alpha)$, $\lambda_k(\alpha)$, $\theta_m(\alpha)$ and the R calculated at $\alpha = 1$ by using the last Padé approximant;
6: Compute the new power series coefficents until a maximum order m;
7: Compute the new Padé approximant to the power series and calculate the value of the variables $P_{ij}(\alpha)$, $\lambda_k(\alpha)$, $\theta_m(\alpha)$ at $\alpha = 1$; and calculate the mismatch R;
8: **end while**

The Algorithm 1 presents the main steps in order to obtain the Restarted HEM-based EDP solution.

Once the accuracy is within the desired value, the final Padé approximant is the EDP solution. In the next section the proposed technique is evaluated through experiments in a well known test system.

IV. Experiments and Results

The IEEE 14-bus test-system (see the one-line diagram on Fig. 1) [13] is used in the experiments.

The buses 1, 2, 3, 6 and 8 are of the generation type, being the bus 1 the one assigned as the reference, i.e. the bus with $\theta_1 = 0$. The loads are lumped at other buses only. Multiple thermal units for each generating bus were considered. The buses 1, 2, 3, 6 and 8 have 3, 3, 2, 2 and 3 units, respectively. A base of

Authorized licensed use limited to: CHONGQING UNIVERSITY. Downloaded on February 09,2026 at 09:07:52 UTC from IEEE Xplore. Restrictions apply.

100 MVA is adopted for the pu system. All thermal units have different characteristics according to the fuel and cost for power generation.

Data concerning the transmission line longitudinal (series) parameters, for the impedance $Z_{ij} = R_{ij} + jX_{ij}$, and loads were taken from [13], `case14`. Data of fuel cost, heat curves and operational limits of generation units are shown in the Appendix.

Simulations were carried out in order to determine the economic dispatch to supply the loads. Experiments were accomplished considering the Newton-Raphson (NR) method and the restarted HEM-based EDP considering the embedding model presented in (12)–(14). A tolerance $\epsilon = 10^{-8}$ was established to accept a minimum mismatch and consequently the convergence of the nonlinear system result. Concerning the restarted HEM, the maximum degree for the MacLauren's series was set to 8, which provides 4th order degree polynomials for the rational Padé approximant.

The HEM-based EDP was ran considering a situation for free operational limits and another with constrains for three diffenrt loading/limits scenarios 1,2 and 3. In the scenario 1 you have arround 40% loading of the system with a very flexible allocation. For the scenario 2 the system load was increased in 20%, but the lower limits were also raised to ensure more limits violations. At last in the Scenario 3 we have the same 20% load increase but more restringet limits for a system loading of 50%. Table I exhibits the converged results for the optimal operation for both operational conditions and for both the NR method and HEM-based EDP for the Secenario 1. For the Scenario 2 the results are on Table II and for the Scenario 3 on Table III. The variable P refers to a vector of the output power of the generation units, $P = [P_1^T, P_2^T, P_3^T, P_6^T, P_8^T]$, given in pu of MW, whose entries are stacked by bus of the following way. The first three values, P_{1j}, $j = 1, 2, 3$, are the dispatch for the three units at the bus 1. The three subsequent results, P_{2j}, $j = 4, 5, 6$ are the dispatch for the three units connected to the bus 2, and so on following the sequence P_{3j}, $j = 7, 8$; P_{6j}, $j = 9, 10$; P_{8j}, $j = 11, 12, 13$. The values for λ are the Lagrange multipliers associated to each entry λ_k for $k = 1, \ldots, 14$. The results for θ are associated to entries θ_m of the voltage phases for buses $j = 2, \ldots, 14$. The power output values in bold represent the units that had their limit violated and later on fixed at a maximum or minimum value. Their corresponding 'slack variable' $\overline{\pi}_{ij}$ and $\underline{\pi}_{ij}$ are in sequence represented at the bottom of the table.

The first computations were carried out with free limits and for the lossless transmission system EDP. This first results were used to initialize both the restarted HEM-based EDP and NR methods. At the end of outer loop in the Algorithm 1, the output power of the units marked in bold had its limits violated.

Figs. 2, 3, and 4 depicts the curves of the mismatches as a function of iterations for the NR method and restart for the restarted HEM-based EDP. It can be observed that the mismatch for the restarted HEM-based EDP reaches convergence after only 1 restart, while the NR method requires 2 iterations.

From the results in Tables I, II and III and Figs. 2, 3 and 4 we can verify that the restarted HEM-based EDP can reach the same $\epsilon = 10^{-8}$ precision in the results as the NR method but with a smaller computational burden, for both free limits and

TABLE I
ECONOMIC DISPATCH RESULTS FOR THE MODIFIED IEEE 14-BUS SYSTEM SCENARIO 1

	HEM free	HEM limit	NR free	NR limit
P_i (pu)	-0.0132	**0.0500**	-0.0132	**0.0500**
	0.1364	**0.1000**	0.1364	**0.1000**
	0.2254	0.1591	0.2254	0.1591
	0.0017	**0.0500**	0.0017	**0.0500**
	0.1416	0.0778	0.1416	0.0778
	0.2076	0.1383	0.2076	0.1383
	0.1956	0.1530	0.1956	0.1530
	0.3515	0.3076	0.3515	0.3076
	0.0800	**0.0300**	0.0800	**0.0300**
	0.2061	0.1240	0.2061	0.1240
	0.7429	0.6414	0.7429	0.6414
	0.8253	0.6819	0.8253	0.6819
	-0.4933	**0.1000**	-0.4933	**0.1000**
λ_i ($\$/pu$)	0.0146	0.0144	0.0146	0.0144
	0.0147	0.0146	0.0147	0.0146
	0.0152	0.0151	0.0152	0.0151
	0.0149	0.0147	0.0149	0.0147
	0.0147	0.0144	0.0147	0.0144
	0.0149	0.0146	0.0149	0.0146
	0.0149	0.0146	0.0149	0.0146
	0.0149	0.0146	0.0149	0.0146
	0.0148	0.0146	0.0148	0.0146
	0.0149	0.0147	0.0149	0.0147
	0.0150	0.0147	0.0150	0.0147
	0.0152	0.0149	0.0152	0.0149
	0.0153	0.0150	0.0153	0.0150
	0.0154	0.0151	0.0154	0.0151
θ_i (rad)	0.0000	0.0000	0.0000	0.0000
	-0.0173	-0.0148	-0.0173	-0.0148
	-0.0706	-0.0781	-0.0706	-0.0781
	-0.0424	-0.0386	-0.0424	-0.0386
	-0.0197	-0.0064	-0.0197	-0.0064
	-0.1907	-0.1804	-0.1907	-0.1804
	-0.1304	-0.1250	-0.1304	-0.1250
	-0.1304	-0.1250	-0.1304	-0.1250
	-0.1683	-0.1621	-0.1683	-0.1621
	-0.1808	-0.1739	-0.1808	-0.1739
	-0.1897	-0.1811	-0.1897	-0.1811
	-0.2113	-0.2013	-0.2113	-0.2013
	-0.2132	-0.2036	-0.2132	-0.2036
	-0.2159	-0.2082	-0.2159	-0.2082
$\underline{\pi}_i$ ($\$/pu$)	-	0.40 10^{-3}	-	0.40 10^{-3}
	-	0.10 10^{-3}	-	0.10 10^{-3}
	-	0.30 10^{-3}	-	0.30 10^{-3}
	-	0.10 10^{-3}	-	0.10 10^{-3}
	-	2.30 10^{-3}	-	2.30 10^{-3}

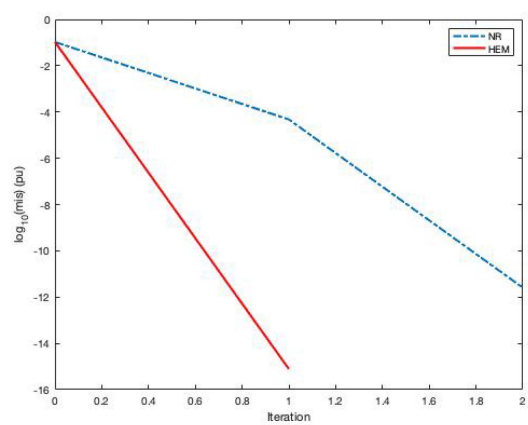

Fig. 2. Mismatch curves for the restarted HEM-based EDP and NR methods Scenario 1.

Authorized licensed use limited to: CHONGQING UNIVERSITY. Downloaded on February 09,2026 at 09:07:52 UTC from IEEE Xplore. Restrictions apply.

TABLE II
ECONOMIC DISPATCH RESULTS FOR THE MODIFIED IEEE 14-BUS SYSTEM SCENARIO 2

	HEM free	HEM limit	NR free	NR limit
P_i (pu)	0.0090	**0.1000**	0.0090	**0.1000**
	0.1593	**0.1500**	0.1593	**0.1500**
	0.2472	0.1686	0.2472	0.1686
	0.0391	**0.1000**	0.0391	**0.1000**
	0.1724	0.1016	0.1724	0.1016
	0.2411	0.1641	0.2411	0.1641
	0.2554	0.2101	0.2544	0.2101
	0.4131	0.3664	0.4131	0.3664
	0.1373	**0.0500**	0.1373	**0.0500**
	0.2534	0.1707	0.2534	0.1707
	0.7816	0.6763	0.7816	0.6763
	0.8799	0.7312	0.8799	0.7312
	-0.4567	**0.1500**	-0.4567	**0.1500**
λ_i ($\$/pu$)	0.0147	0.0144	0.0147	0.0144
	0.0148	0.0146	0.0148	0.0146
	0.0154	0.0152	0.0154	0.0151
	0.0151	0.0148	0.0151	0.0147
	0.0149	0.0145	0.0149	0.0144
	0.0150	0.0147	0.0150	0.0146
	0.0150	0.0147	0.0150	0.0146
	0.0150	0.0147	0.0150	0.0147
	0.0149	0.0147	0.0149	0.0147
	0.0151	0.0148	0.0151	0.0148
	0.0151	0.0148	0.0151	0.0148
	0.0154	0.0151	0.0154	0.0151
	0.0155	0.0152	0.0155	0.0152
	0.0157	0.0154	0.0157	0.0154
θ_i (rad)	0.0000	0.0000	0.0000	0.0000
	-0.0199	-0.0229	-0.0199	-0.0229
	-0.0830	-0.0941	-0.0830	-0.0941
	-0.0508	-0.0512	-0.0508	-0.0512
	-0.0261	-0.0160	-0.0261	-0.0160
	-0.2307	-0.2239	-0.2307	-0.2239
	-0.1570	-0.1557	-0.1570	-0.1557
	-0.1570	-0.1557	-0.1570	-0.1557
	-0.2028	-0.2005	-0.2028	-0.2005
	-0.2180	-0.2149	-0.2180	-0.2149
	-0.2291	-0.2242	-0.2291	-0.2242
	-0.2555	-0.2489	-0.2555	-0.2489
	-0.2577	-0.2561	-0.2577	-0.2561
	-0.2605	-0.2566	-0.2605	-0.2566
$\underline{\pi}_i$ ($\$/pu$)	-	$0.50\ 10^{-3}$	-	$0.50\ 10^{-3}$
	-	$0.20\ 10^{-3}$	-	$0.20\ 10^{-3}$
	-	$0.30\ 10^{-3}$	-	$0.30\ 10^{-3}$
	-	$0.09\ 10^{-3}$	-	$0.09\ 10^{-3}$
	-	$2.30\ 10^{-3}$	-	$2.30\ 10^{-3}$

TABLE III
ECONOMIC DISPATCH RESULTS FOR THE MODIFIED IEEE 14-BUS SYSTEM SCENARIO 3

	HEM free	HEM limit	NR free	NR limit
P_i (pu)	0.0090	**0.0500**	0.0090	**0.0500**
	0.1593	0.1101	0.1593	0.1101
	0.2472	0.2003	0.2472	0.2003
	0.0391	**0.0500**	0.0391	**0.0500**
	0.1724	0.1264	0.1724	0.1264
	0.2411	0.1911	0.2411	0.1911
	0.2554	0.2237	0.2554	0.2237
	0.4131	0.3804	0.4131	0.3804
	0.1373	0.0596	0.1373	0.0596
	0.2534	0.1893	0.2534	0.1893
	0.7816	0.6964	0.7816	0.6964
	0.8799	0.7595	0.8799	0.7595
	-0.4567	**0.1000**	-0.4567	**0.1000**
λ_i ($\$/pu$)	0.0147	0.0145	0.0147	0.0145
	0.0148	0.0147	0.0148	0.0147
	0.0154	0.0153	0.0154	0.0153
	0.0151	0.0149	0.0151	0.0149
	0.0149	0.0146	0.0149	0.0146
	0.0150	0.0148	0.0150	0.0148
	0.0150	0.0148	0.0150	0.0148
	0.0150	0.0148	0.0150	0.0148
	0.0149	0.0147	0.0149	0.0147
	0.0151	0.0149	0.0151	0.0149
	0.0151	0.0149	0.0151	0.0149
	0.0154	0.0151	0.0154	0.0151
	0.0155	0.0152	0.0155	0.0152
	0.0157	0.0154	0.0157	0.0154
θ_i (rad)	0.0000	0.0000	0.0000	0.0000
	-0.0199	-0.0202	-0.0199	-0.0202
	-0.0830	-0.0874	-0.0830	-0.0874
	-0.0508	-0.0462	-0.0508	-0.0462
	-0.0261	-0.0120	-0.0261	-0.0120
	-0.2307	-0.2196	-0.2307	-0.2196
	-0.1570	-0.1508	-0.1570	-0.1508
	-0.1570	-0.1508	-0.1570	-0.1508
	-0.2028	-0.1957	-0.2028	-0.1957
	-0.2180	-0.2102	-0.2180	-0.2102
	-0.2291	-0.2197	-0.2291	-0.2197
	-0.2555	-0.2446	-0.2555	-0.2446
	-0.2577	-0.2472	-0.2577	-0.2472
	-0.2605	-0.2519	-0.2605	-0.2519
$\underline{\pi}_i$ ($\$/pu$)	-	$0.30\ 10^{-3}$	-	$0.30\ 10^{-3}$
	-	$0.20\ 10^{-3}$	-	$0.20\ 10^{-3}$
	-	$2.10\ 10^{-3}$	-	$2.10\ 10^{-3}$

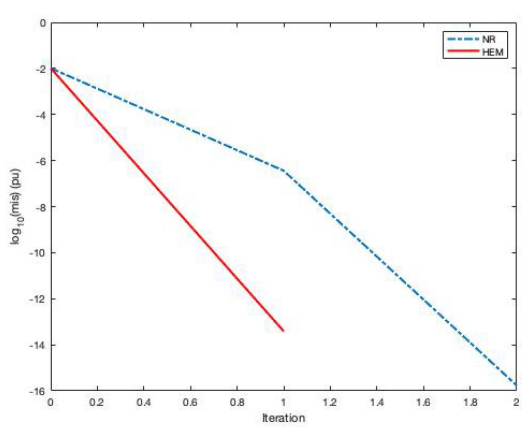

Fig. 3. Mismatch curves for the restarted HEM-based EDP and NR methods Scenario 2.

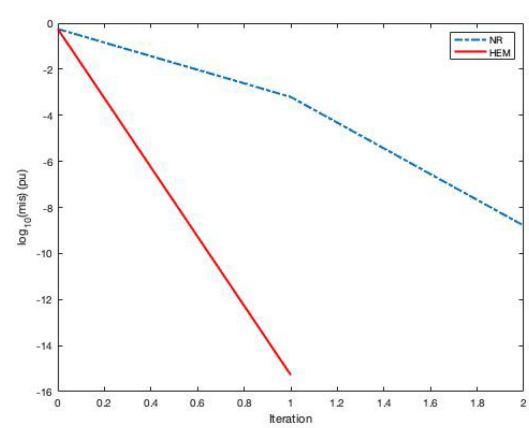

Fig. 4. Mismatch curves for the restarted HEM-based EDP and NR methods Scenario 3.

Authorized licensed use limited to: CHONGQING UNIVERSITY. Downloaded on February 09,2026 at 09:07:52 UTC from IEEE Xplore. Restrictions apply.

TABLE IV
FUEL COST, IN $/MBTU, FOR A UNIT CONNECTED TO A BUS

Unit	Bus 1	Bus 2	Bus3	Bus 6	Bus 8
1	1.03	0.97	1.03	0.97	1.02
2	1.00	1.01	1.00	1.01	0.98
3	0.98	1.00	-	-	1.01

TABLE V
HEAT CURVE PARAMETERS FOR A UNIT IN MBTU/H CONNECTED TO A BUS

Variable	Unit	Bus 1	Bus 2	Bus 3	Bus 6	Bus 8
H_1	1	0.00142	0.00122	0.00142	0.00152	0.00122
	2	0.00142	0.00142	0.00142	0.00142	0.00132
	3	0.00152	0.00132	-	-	0.00162
H_2	1	0.0142	0.0152	0.0142	0.0152	0.0122
	2	0.0142	0.0142	0.0142	0.0142	0.0132
	3	0.0142	0.0142	-	-	0.0162
H_3	1	0.12	0.13	0.12	0.13	0.11
	2	0.12	0.12	0.12	0.12	0.10
	3	0.11	0.13	-	-	0.12

TABLE VI
OPERATIONAL LIMITS OF GENERATION UNITS SCENARIO 1

Unit	Bus 1	Bus 2	Bus 3	Bus 6	Bus 8
Lower Limit					
1	0.05	0.05	0.05	0.03	0.3
2	0.1	0.05	0.05	0.1	0.3
3	0.1	0.05	-	-	0.1
Upper Limit					
1	0.4	0.3	0.3	0.3	0.9
2	0.4	0.5	0.5	0.3	0.9
3	0.6	0.5	-	-	0.4

constrained limits. However, the HEM reaches the given tolerance with reduced number of restarts and low order polynomial degree with high accuracy.

V. CONCLUSION

This paper presented a method for solving the EDP for a multi-bus test system based on a holomorphic embedding technique of a set of equations. The technique uses a restarted process [11] to improve the accuracy of the HEM results. It requires low order polynomial for the MacLauren's series and consequently requires low-order polynomial to generate the rational fraction for the Padé approximant.

From the results of the experiments carried out on different loading scenarios on the IEEE 14-bus test system, it is possible to notice that the HEM has a similar performance to the NR method with a better accuracy for the same initial guess. Another advantage of the HEM in comparison with the traditional methods is that even though a initial guess is used, these values do not interfere with the convergence. The method will converge to the solution, whenever there is a solution, regardless of a good initial guess or loading conditions, features that are simply not present in the NR. In future works, we intend to investigate further the flexibility of the method in more mathematicaly dense and complex systems, such as the ones for AC Optimal Power Flow.

APPENDIX

In the appendix section, data of the fuel cost (see Table IV), heat curve parameters Table V and operational limits of generation units for different scenarios (Tables VI, VII, VIII) are presented.

TABLE VII
OPERATIONAL LIMITS OF GENERATION UNITS SCENARIO 2

Unit	Bus 1	Bus 2	Bus 3	Bus 6	Bus 8
Lower Limit					
1	0.1	0.1	0.1	0.05	0.35
2	0.15	0.1	0.1	0.15	0.35
3	0.15	0.1	-	-	0.15
Upper Limit					
1	0.5	0.35	0.35	0.35	1.1
2	0.5	0.6	0.6	0.35	1.1
3	0.75	0.6	-	-	0.5

TABLE VIII
OPERATIONAL LIMITS OF GENERATION UNITS SCENARIO 3

Unit	Bus 1	Bus 2	Bus 3	Bus 6	Bus 8
Lower Limit					
1	0.05	0.05	0.05	0.03	0.3
2	0.1	0.05	0.05	0.1	0.3
3	0.1	0.05	-	-	0.1
Upper Limit					
1	0.4	0.3	0.3	0.3	0.9
2	0.4	0.5	0.5	0.3	0.9
3	0.6	0.5	-	-	0.4

REFERENCES

[1] A. C. S. Ramos, G. Zizzo, and F. D. Freitas, "Economic dispatch problem solution via holomorphic embedding method," in *Proc. IEEE 21st Mediterranean Electrotechnical Conf.*, 2022, pp. 384–389, doi: 10.1109/MELECON53508.2022.9842977.

[2] S. Shao, F. Gao, and J. Wu, "Distributed multi-area intraday economic dispatch using modified critical region projection algorithm," *IEEE Trans. Automat. Sci. Eng.*, early access, Mar. 24, 2023, doi: 10.1109/TASE.2023.3252659.

[3] Y. Yang, P. Yang, Z. Zhao, and L. L. Lai, "A multi-timescale coordinated optimization framework for economic dispatch of micro-energy grid considering prediction error," in *IEEE Trans. Power Syst.*, early access, May 10, 2023, doi: 10.1109/TPWRS.2023.3274751.

[4] J. A. Momoh, R. F. Austin, R. Adapa, and E. C. Ogbuobiri, "Application of interior point method to economic dispatch," in *Proc. IEEE Int. Conf. Syst. Man Cybern.*,, 1992, pp. 1096–1101.

[5] C. Wu, C. Cao, J. Xie, D. Yue, S. Xu, and J. Wang, "Economic dispatch of virtual power plant based on distributed primal-dual sub-gradient method," in *Proc. 36th Chin. Contol Conf.*, 2017, pp. 10517–10521.

[6] A. Y. Saber, "Economic dispatch using particle swarm optimization with bacterial foraging effect," *Int. J. Elect. Power Energy Syst.*, vol. 34, pp. 38–46, 2012.

[7] J. Tippayachai, W. Ongsakul, and I. Ngamroo, "Parallel micro genetic algorithm for constrained economic dispatch," *IEEE Trans. Power Syst.*, vol. 17, no. 3, pp. 790–797, Aug. 2002.

[8] T. Yalcinoz and H. Atun, "Power economic dispatch using a hybrid genetic algorithm," *IEEE Eng. Rev.*, vol. 21, no. 3, pp. 59–60, Mar. 2001.

[9] F. Xu, P. Qiu, C. Ding, and Y. Lu, "Flexible combined heat and power dispatch based on probabilistic prediction of wind power," in *Proc. 5th Asia Energy Elect. Eng. Symp.*, 2023, pp. 1491–1495, doi: 10.1109/AEEES56888.2023.10114217.

[10] A. Trias, "The holomorphic embedding load-flow method," in *Proc. IEEE Power Energy Soc. Gen. Meeting*, 2012, pp. 1–8.

[11] F. D. Freitas, A. C. Santos, L. F. J. Fernandes, and Y. G. I. Acle, "Restarted holomorphic embedding load-flow model based on low-order Padé approximant and estimated bus power injection," *Int. J. Elect. Power Energy Syst.*, vol. 112, pp. 326–338, Nov. 2019.

[12] F. D. Freitas, A. C. S. Ramos, and A. C. d. Santos Jr., "Solucao do problema de despacho economico para sistemas de geracao termica considerando as perdas no sistema de transmissao atraves de adaptacao holomorfica de funcoes," in *Proc. Anais do Congresso Barsileiro di Automatica*, 2019, Art. no. CBA2018.

Authorized licensed use limited to: CHONGQING UNIVERSITY. Downloaded on February 09,2026 at 09:07:52 UTC from IEEE Xplore. Restrictions apply.

[13] R. D. Zimmerman, C. E. Murillo-Sánchez, and R. J. Thomas, "MATPOWER: Steady-state operations, planning and analysis tools for power systems research and education," *IEEE Trans. Power Syst.*, vol. 26, no. 1, pp. 12–19, Feb. 2011.

[14] S. Vazquez-Rodriguez and R. Duro, "A genetic based technique for the determination of power system topological observability," in *Proc. 2nd IEEE Int. Workshop Intell. Data Acquisition Adv. Comput. Syst. Technol. Appl.*, 2003, pp. 48–52.

[15] A. J. Wood and B. F. Woolenberg, *Power Generation, Operation and Control*, 2nd ed. Hoboken, NJ, USA: Wiley, 1996.

[16] L. T. Al Bahrani, J. C. Patra, and R. Kowalczyk, "Multi-gradient PSO algorithm for economic dispatch of thermal generating units in smart grid," in *Proc. IEEE Innov. Smart Grid Technol. Asia*, 2016, pp. 258–263.

[17] F. Benhamida, I. Ziane, S. Souag, A. Graa, and B. Dehiba, "Solving dynamic economic load dispatch with ramp rate limit using quadratic programming," in *Proc. North Amer. Power Symp.*, 2013, pp. 1–5.

[18] M. Sydulu, "A very fast and effective noniterative "/spl lambda/-logic based" algorithm for economic dispatch of thermal units," in *Proc. IEEE Region 10th Conf. Multimedia Technol. Asia-Pacific Inf. Infrastructure*, 1999, pp. 1434–1437.

[19] S. Rao, Y. Feng, D. J. Tylavsky, and M. K. Subramanian, "The holomorphic embedding method applied to the power-flow problem," *IEEE Trans. Power Syst.*, vol. 31, no. 5, pp. 3816–3828, Sep. 2016.

[20] S. Radil, A. Yazici, and B. Urazel, "Solution to security constrained lossy economic power dispatch problem for power system area including limited energy supply thermal units using modified subgradient algorithm based on feasible values," in *Proc. 7th Int. Conf. Elect. Electron. Eng.*, 2011, pp. I-33–I-37.

[21] S. Fadil and B. Urazel, "Application of modified subgradient algorithm based on feasible values to security constrained economic dispatch problem with prohibited operation zones," in *Proc. 8th Int. Conf. Elect. Electron. Eng.*, 2013, pp. 549–553.

Authorized licensed use limited to: CHONGQING UNIVERSITY. Downloaded on February 09,2026 at 09:07:52 UTC from IEEE Xplore. Restrictions apply.