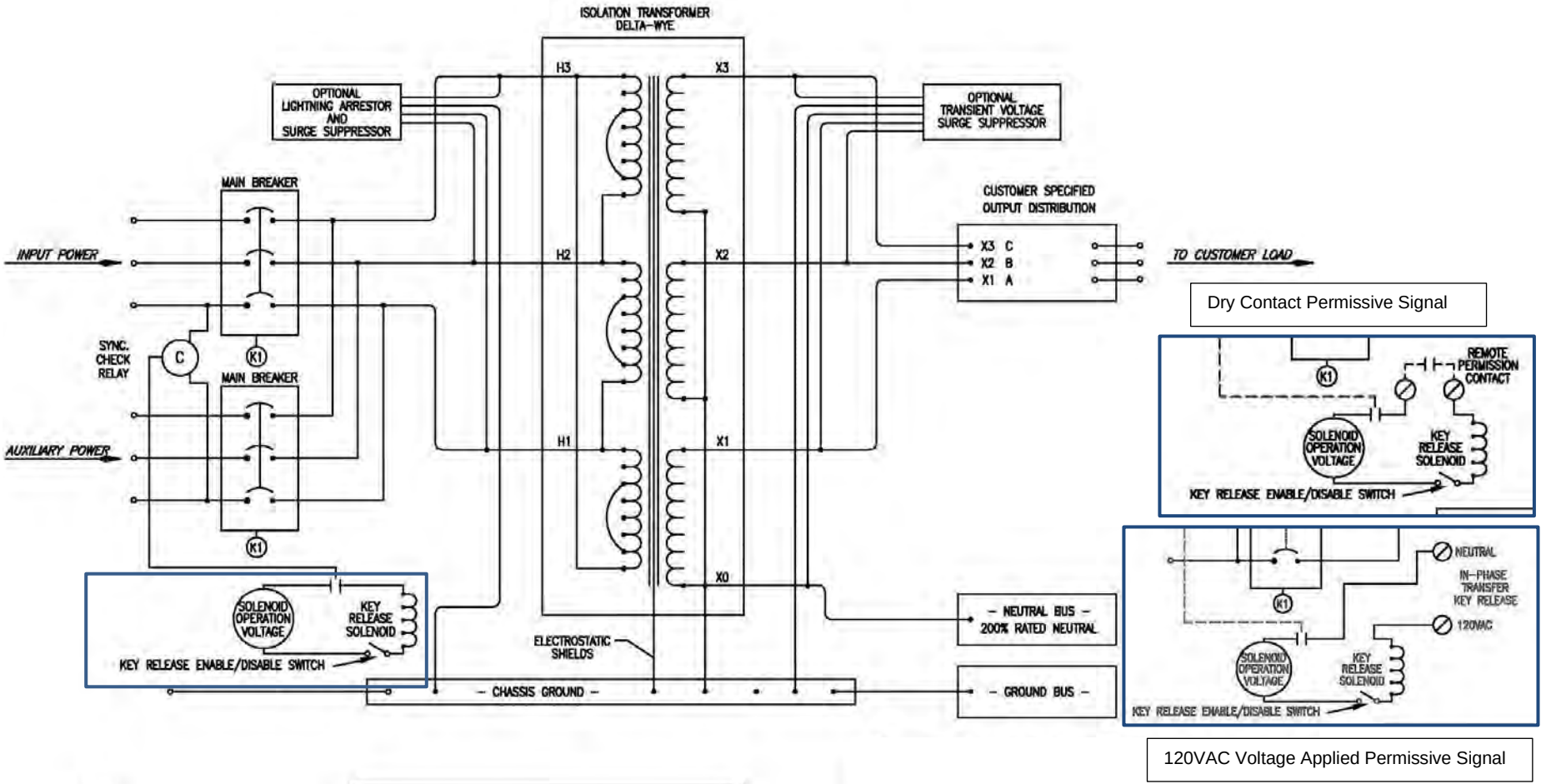

Notes:

1. ○ = Customer connections.
2. • = Factory connections.
3. (K1) Key interlocked

INTERNAL PERMISSIVE SIGNAL