The box is a Hammond Manufacturing 1457N1201EBK

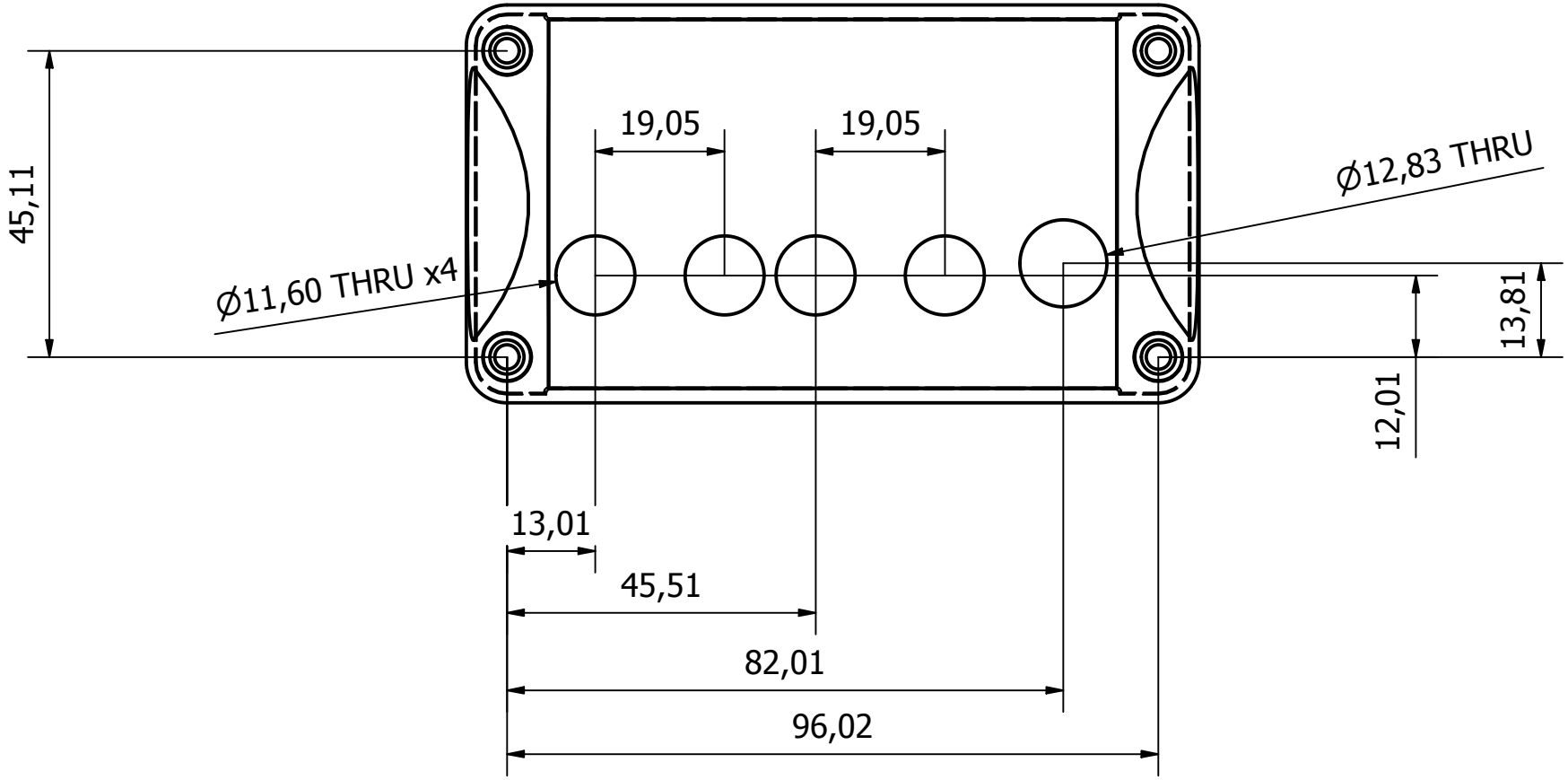

Designed by	Checked by	Approved by	Date		Date	
Patrick Baus	Patrick Baus				07.03.2022	

	Line Injector Front Panel		
	Box Front Panel	Edition 1.0.1	Sheet 1 / 1